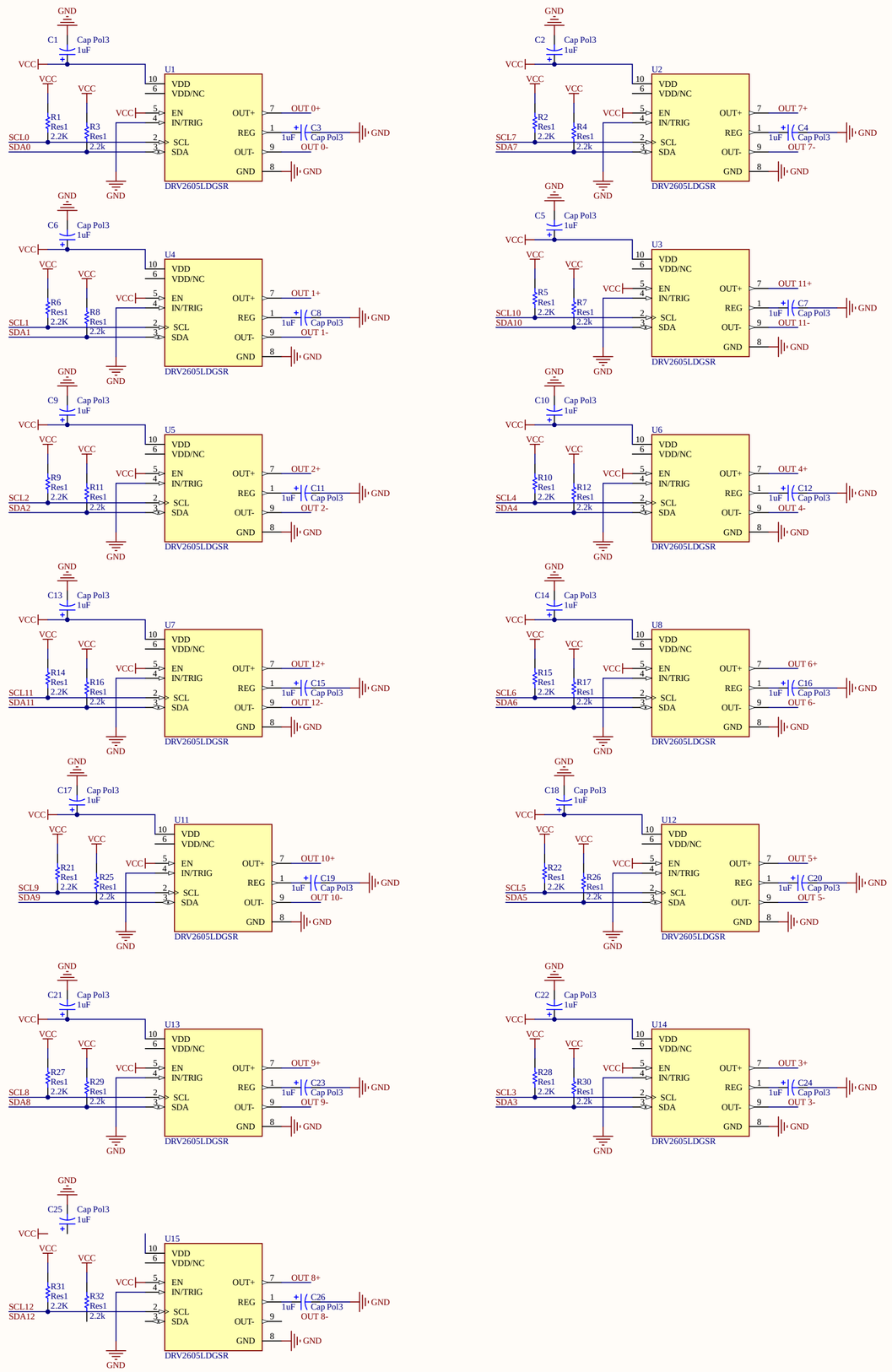

Title			Altium Limited L3, 12a Rodborough Rd Frenchs Forest NSW Australia 2086
Size: A2	Number:	Revision:	
Date: 1/11/2021	Time: 12:03:05 AM	Sheet of	
File: C:\Users\Public\Documents\Altium\Projects\PCB_Project_HapticDriver_V3\hapticDriverV3.SchDoc			

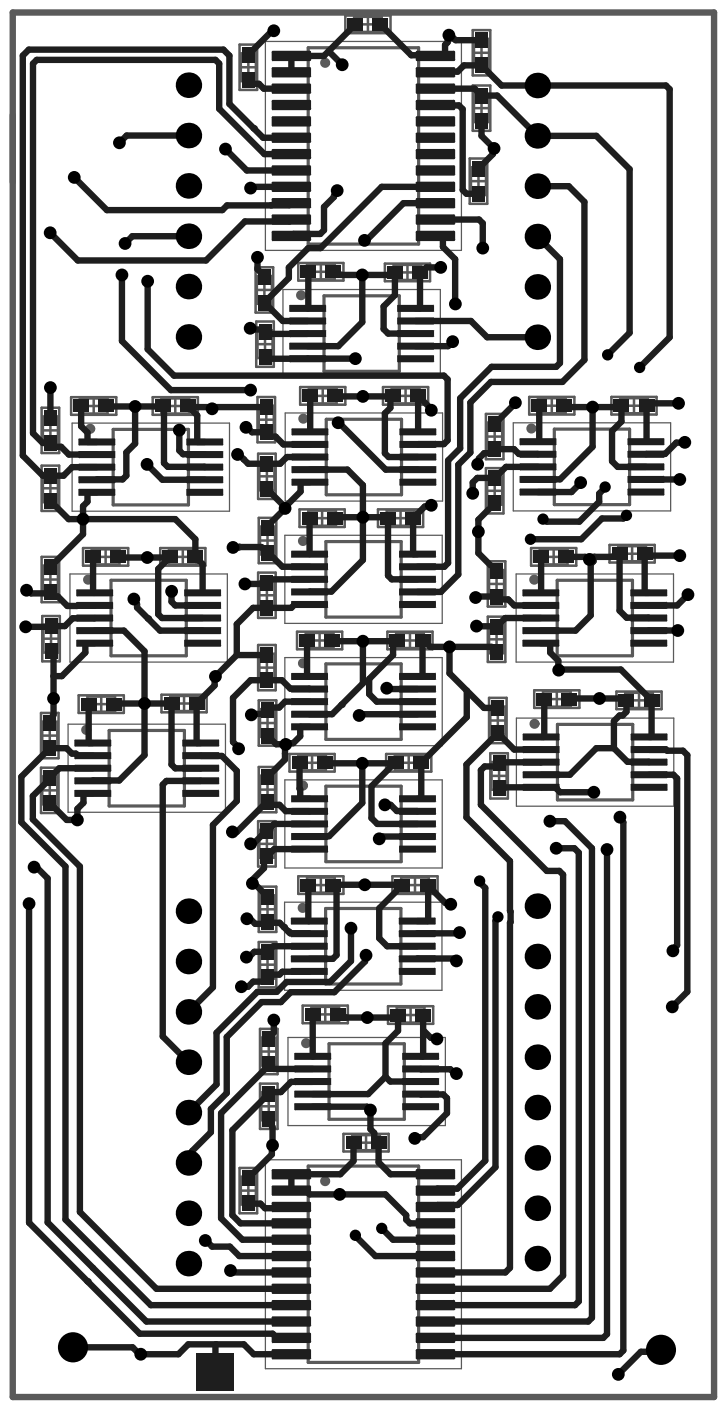

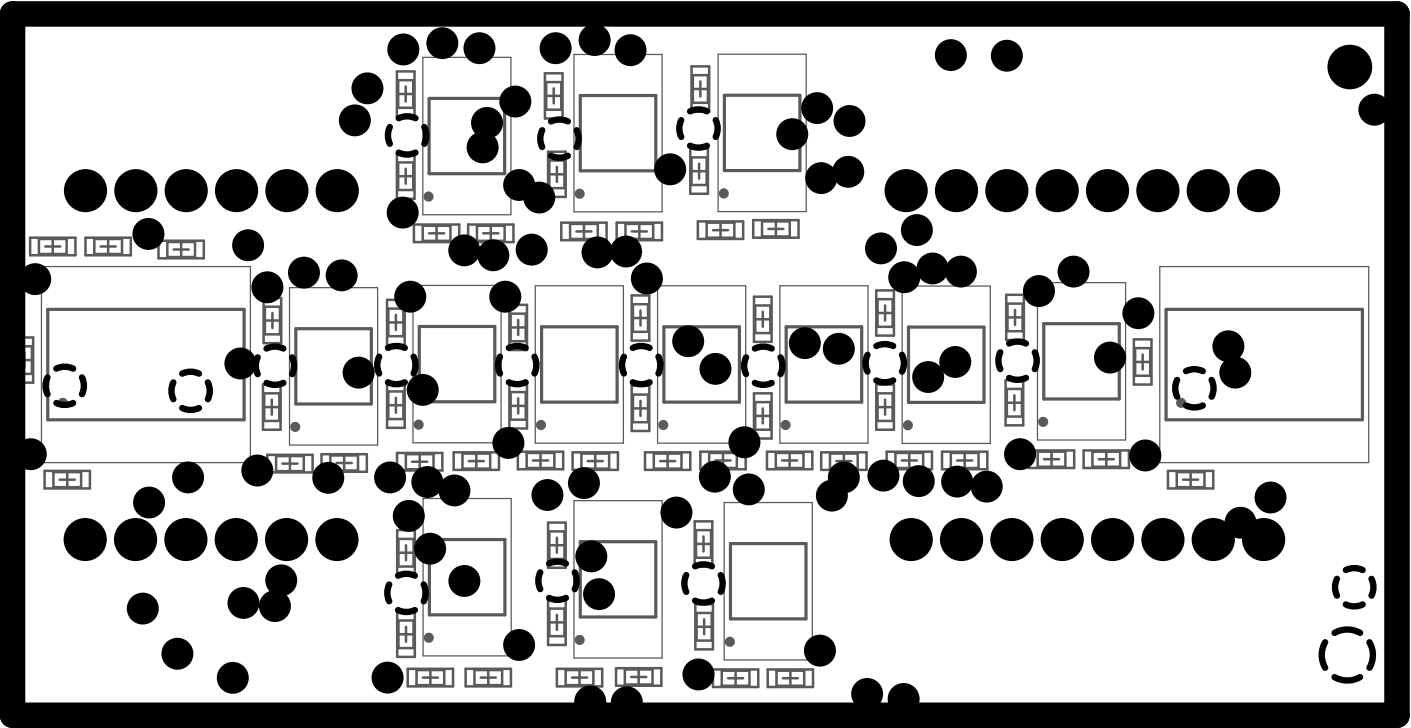

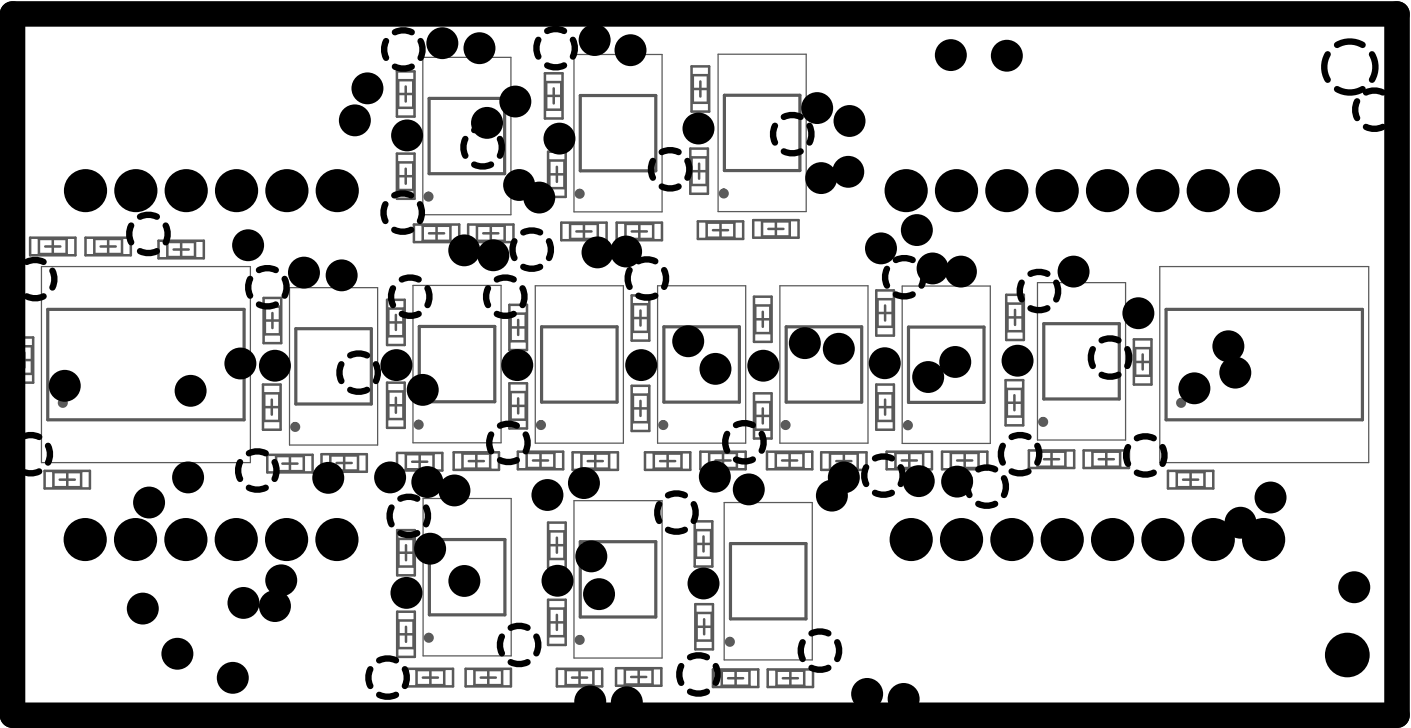

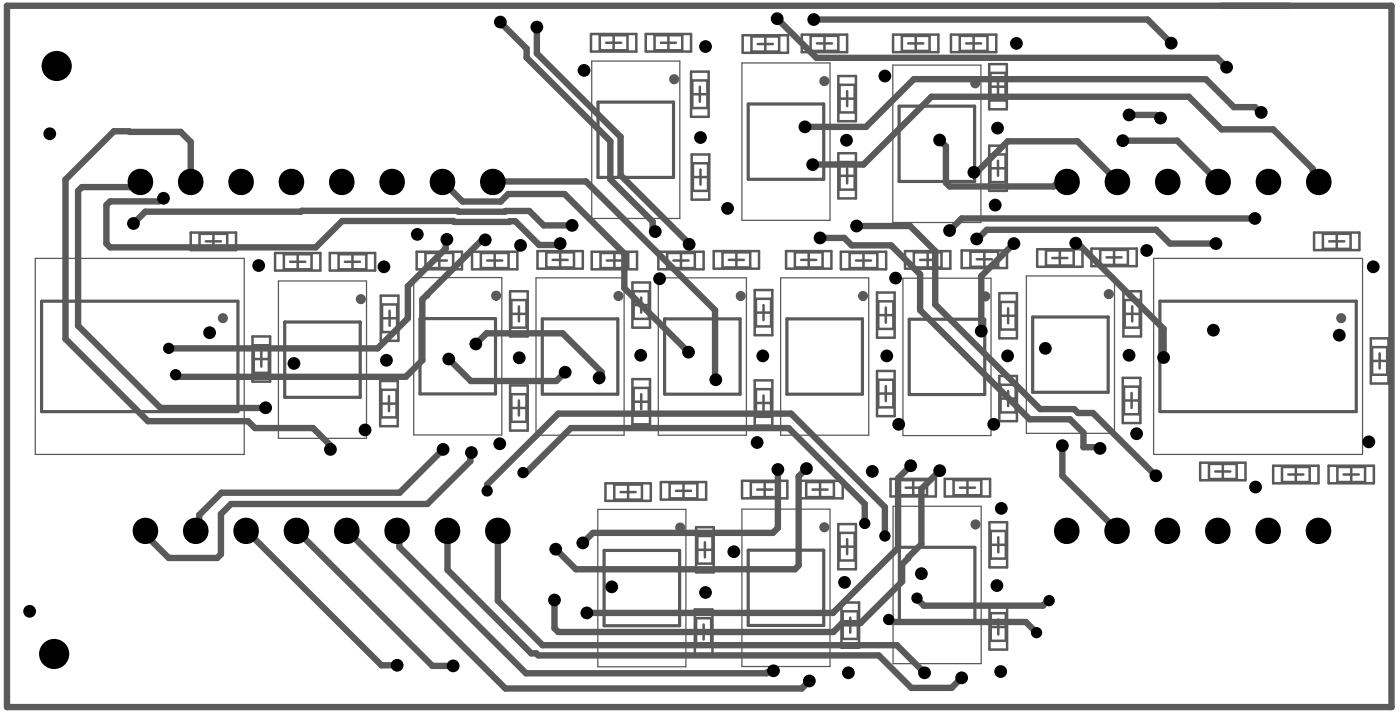

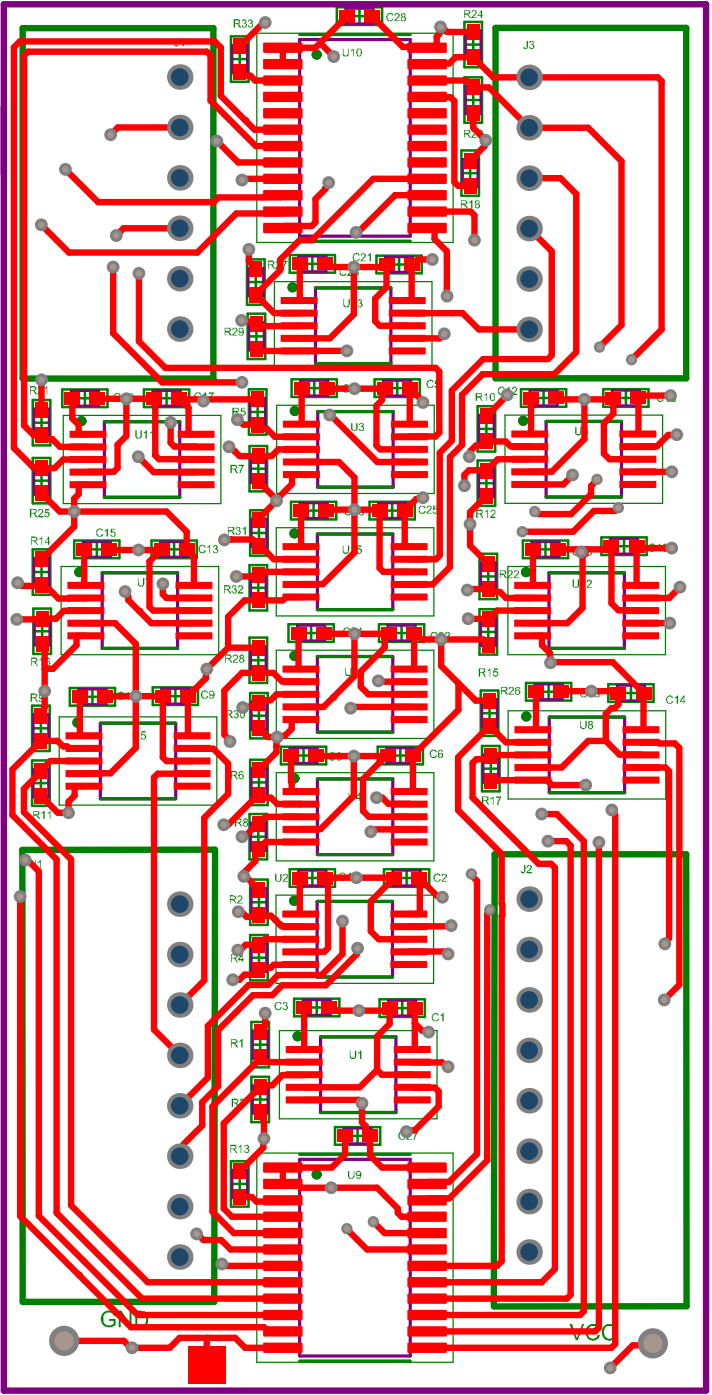
R33
C28
R24
U10
J3
R18
C21
U13
R29
R11
C17
U11
R5
U3
R7
R10
C12
R25
R12
R14
C15
C13
R31
C25
U6
R32
R22
U12
R28
R15
R26
C14
U8
C9
R30
C6
R6
R17
R8
J2
U2
C2
R2
R4
C3
C1
R1
U1
R3
C27
R13
U9
GND
VCC

SDA IN
SCL IN
MOTOR 7
MOTOR 8
MOTOR 0
MOTOR 1
MOTOR 2
MOTOR 3
MOTOR 4
MOTOR 5
MOTOR 6
MOTOR 9
MOTOR 10
MOTOR 11
MOTOR 12
ADAM BAUMANN
THESIS PROJECT PCB
V3