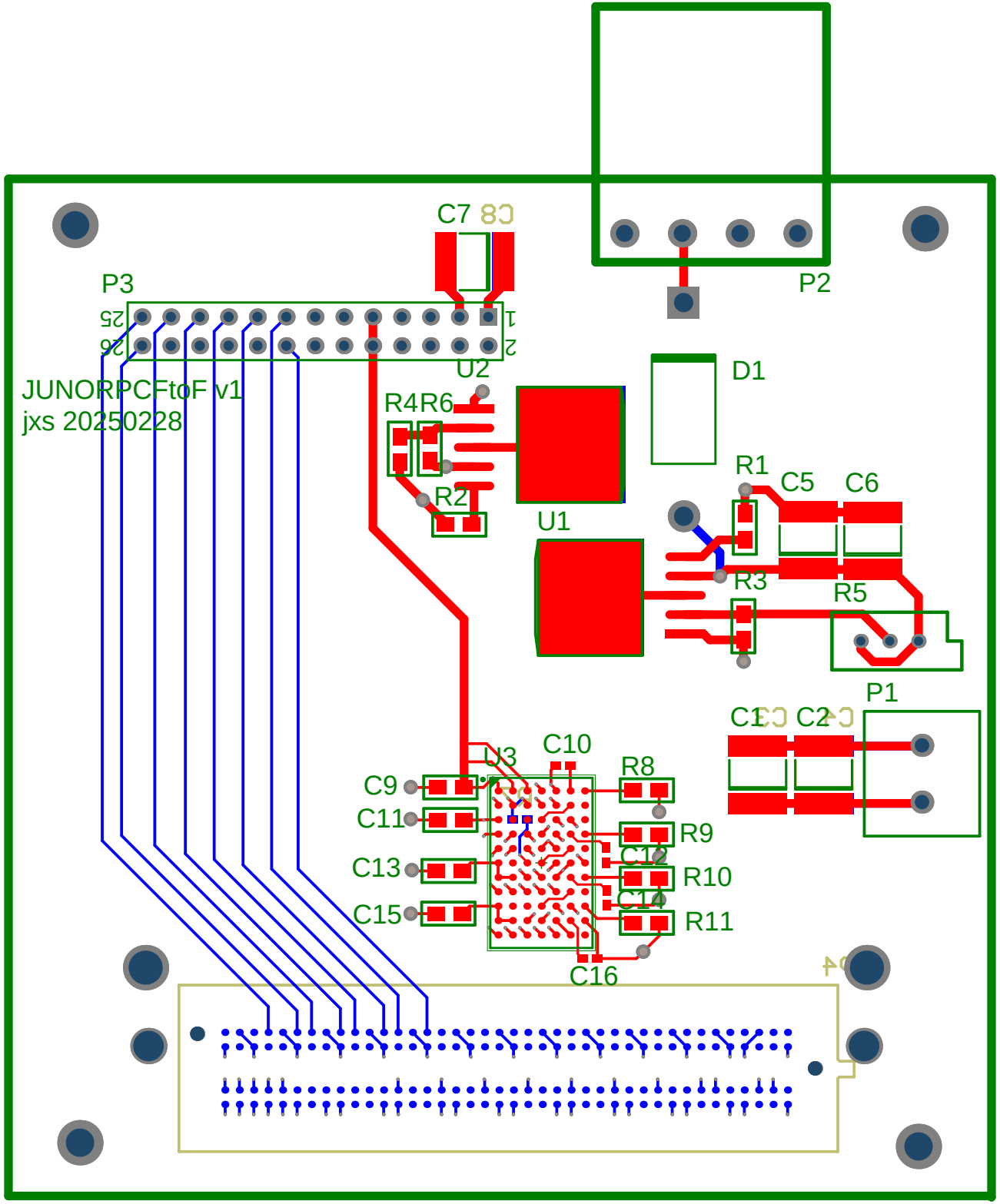
C7
C8
P3
25
26
1
2
U2
JUNORPCFtoF v1
jxs 20250228
R4
R6
R2
U1
D1
R1
C5
C6
R3
R5
P2
P1
C1
C3
C2
C4
U3
C10
R8
C9
C11
R9
C12
C13
R10
C14
C15
R11
C16

Comment	Description	Designator	Footprint	LibRef	Quantity