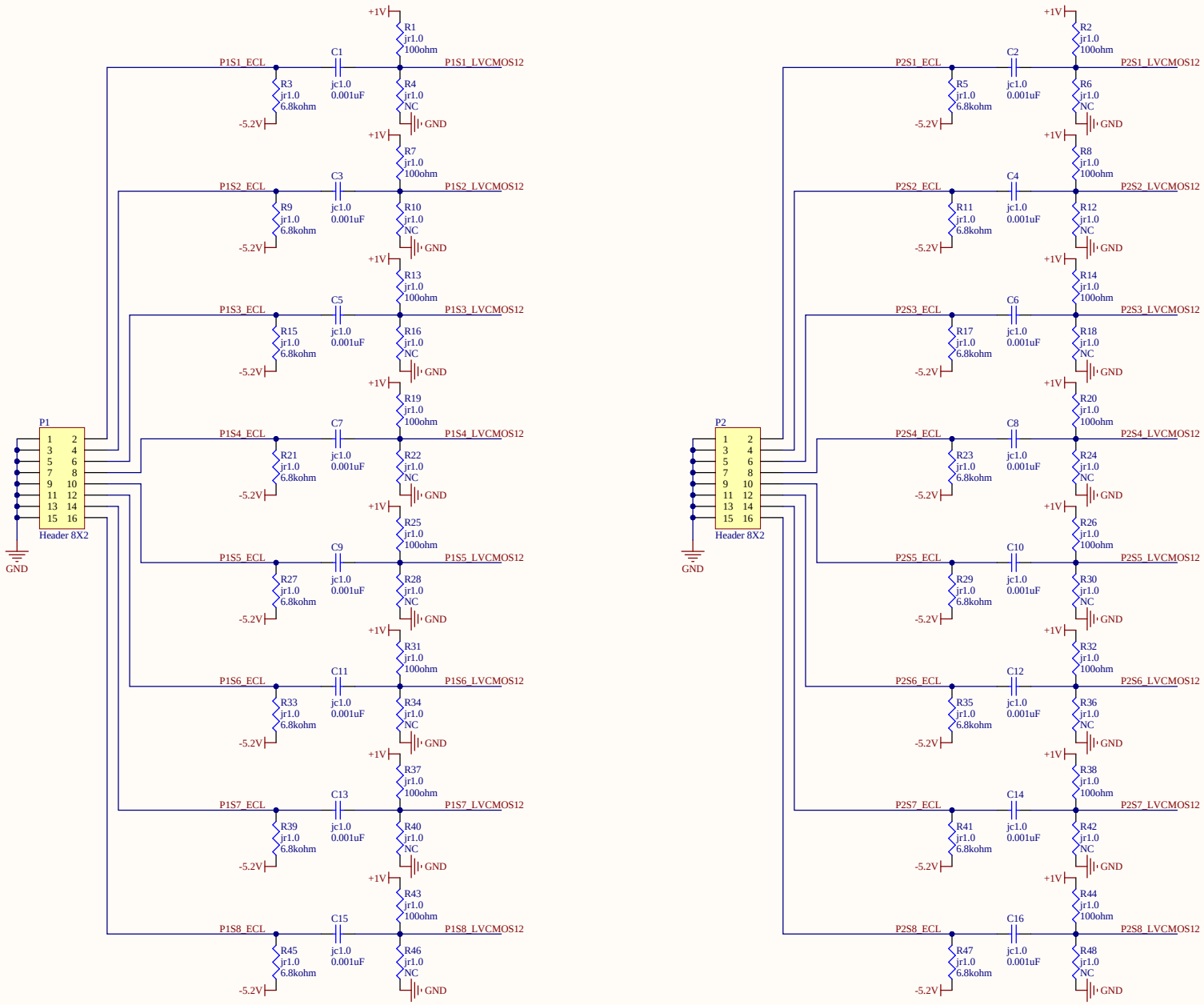


| Title | | |
|---|---|---|
| Size A3 | Number | Revision |
| Date: 3-25-2025 | | Sheet of |
| File: E:\Yun\..\input1.SchDoc | | Drawn By: |