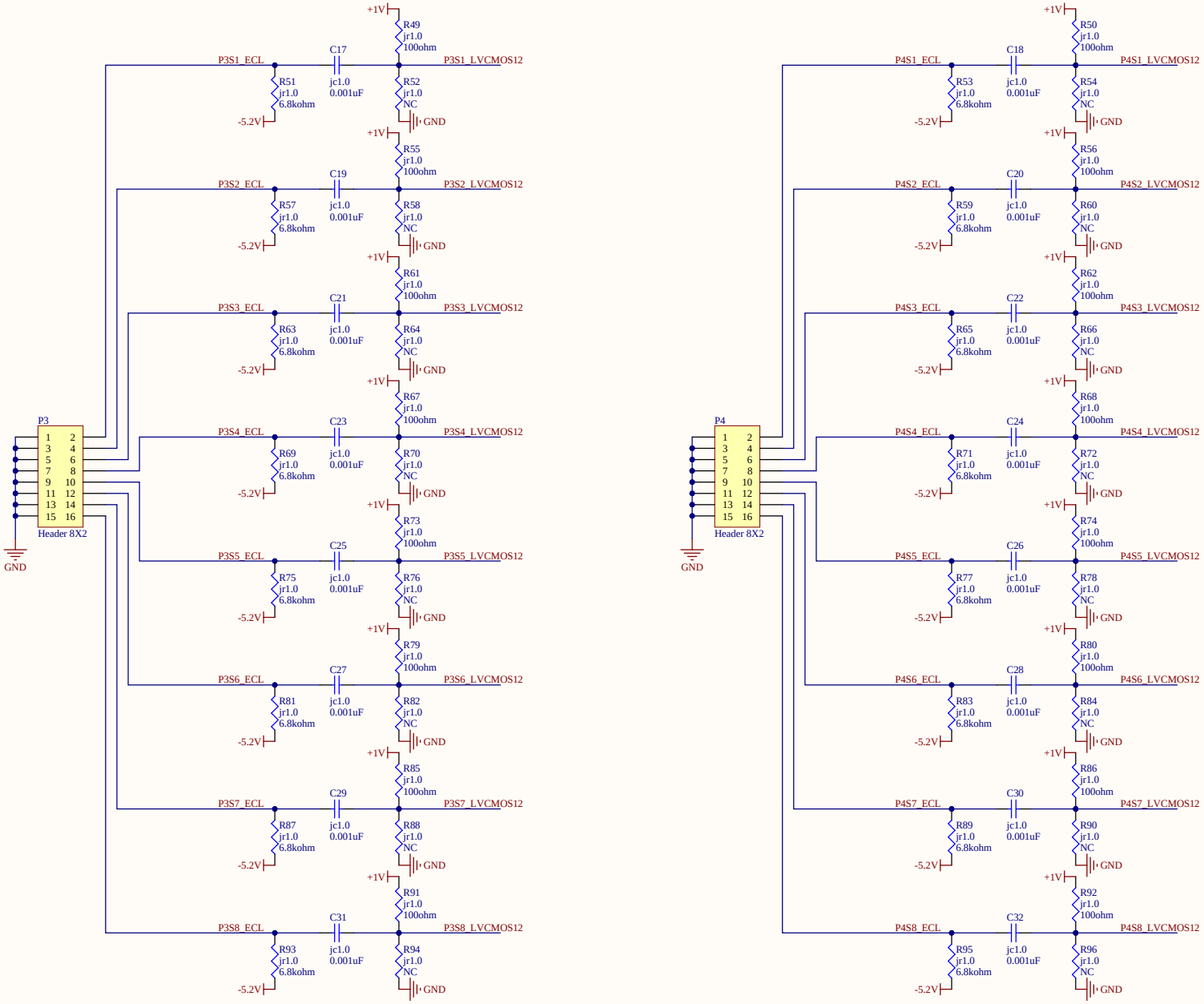

Title		
Size A3	Number	Revision
Date: 3-25-2025		Sheet of
File: E:\Yun\..\input2.SchDoc		Drawn By: