REVISIONS			
REV	DESCRIPTION	DATE	APPROVED

Discrimination X 32

DAC X 4

KC7K410T-FFG676

Power Supply

SFP+

JTAG

GPIO(SW,SMA,LEMO,LED,Header)

12VIN

LTM4644

1.5V@4A

VCCAUX1.8V@4A

VCCO2.5V@4A

VCCO1.35V@4A

LTM4644

VCCINT1.0V@8A

VCCO3.3V@8A

LT3070 MGTAVCC1.0V 5A

LT3070 MGTAVTT1.2V 5A

ADP123 VCCAUX_IO 2.0V 300mA

ADP123 MGTVCCAUX 1.8V300mA

discriminator 1.2V

DAC 3.3V

CONTRACT NO.					
APPROVALS	DATE				
DRAWN					
CHECKED		SIZE C	FSCM NO.	DWG. NO.	REV
ISSUED		SCALE		SHEET	

DWG. NO.

SH.

REV.

H=4ND; V=4LA

REVISIONS			
REV	DESCRIPTION	DATE	APPROVED

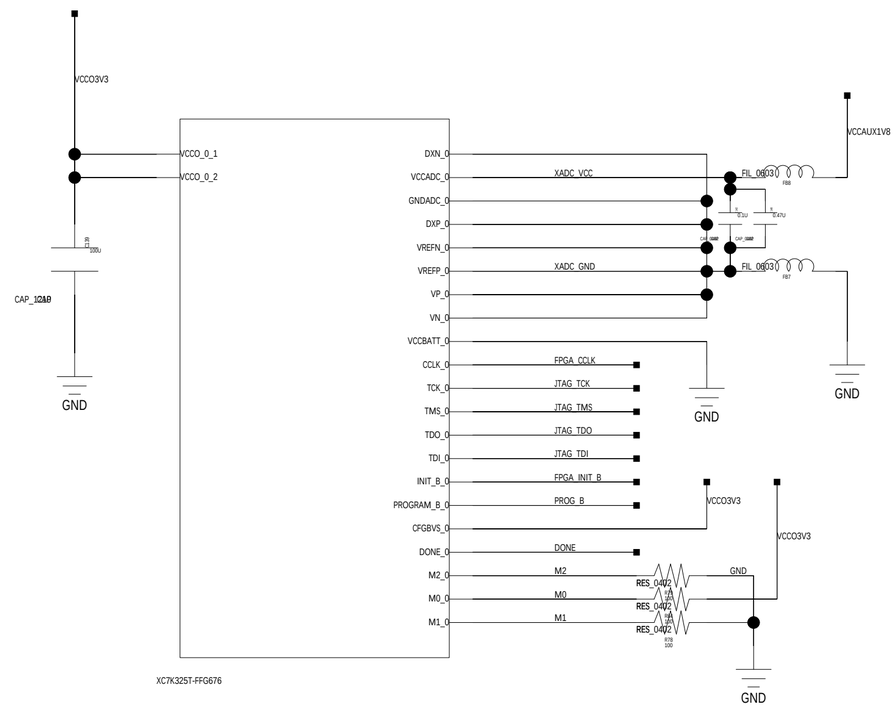

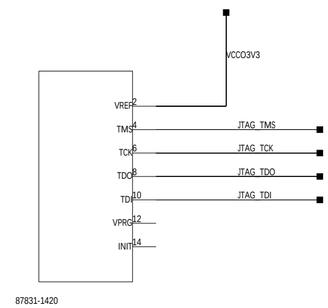

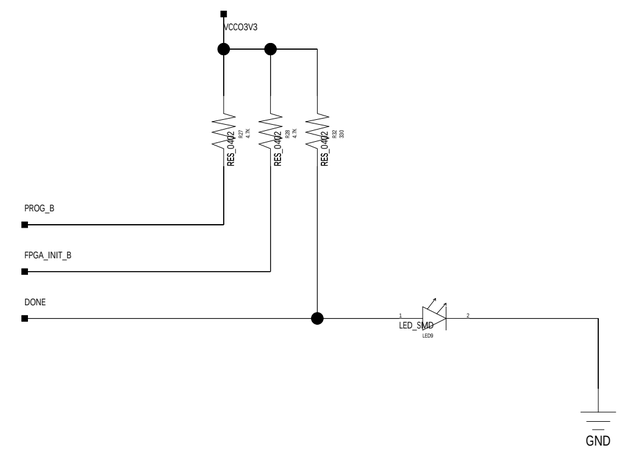

BANK0, JTAG

CONTRACT NO.					
APPROVALS	DATE				
DRAWN					
CHECKED		SIZE	FSCM NO.	DWG. NO.	REV
ISSUED		C			
		SCALE		SHEET	

DWG. NO.
SH.
REV.

H=4ND; V=4LA

REVISIONS			
REV	DESCRIPTION	DATE	APPROVED

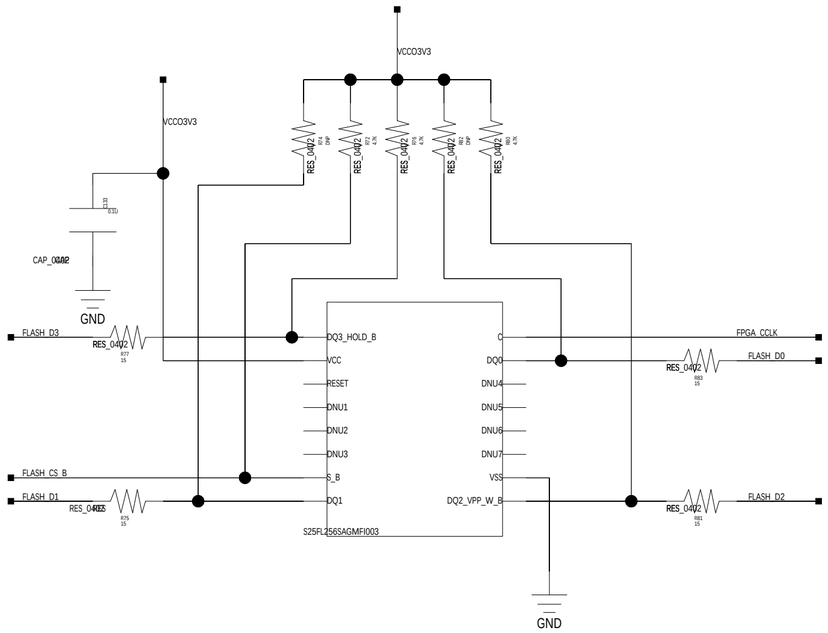

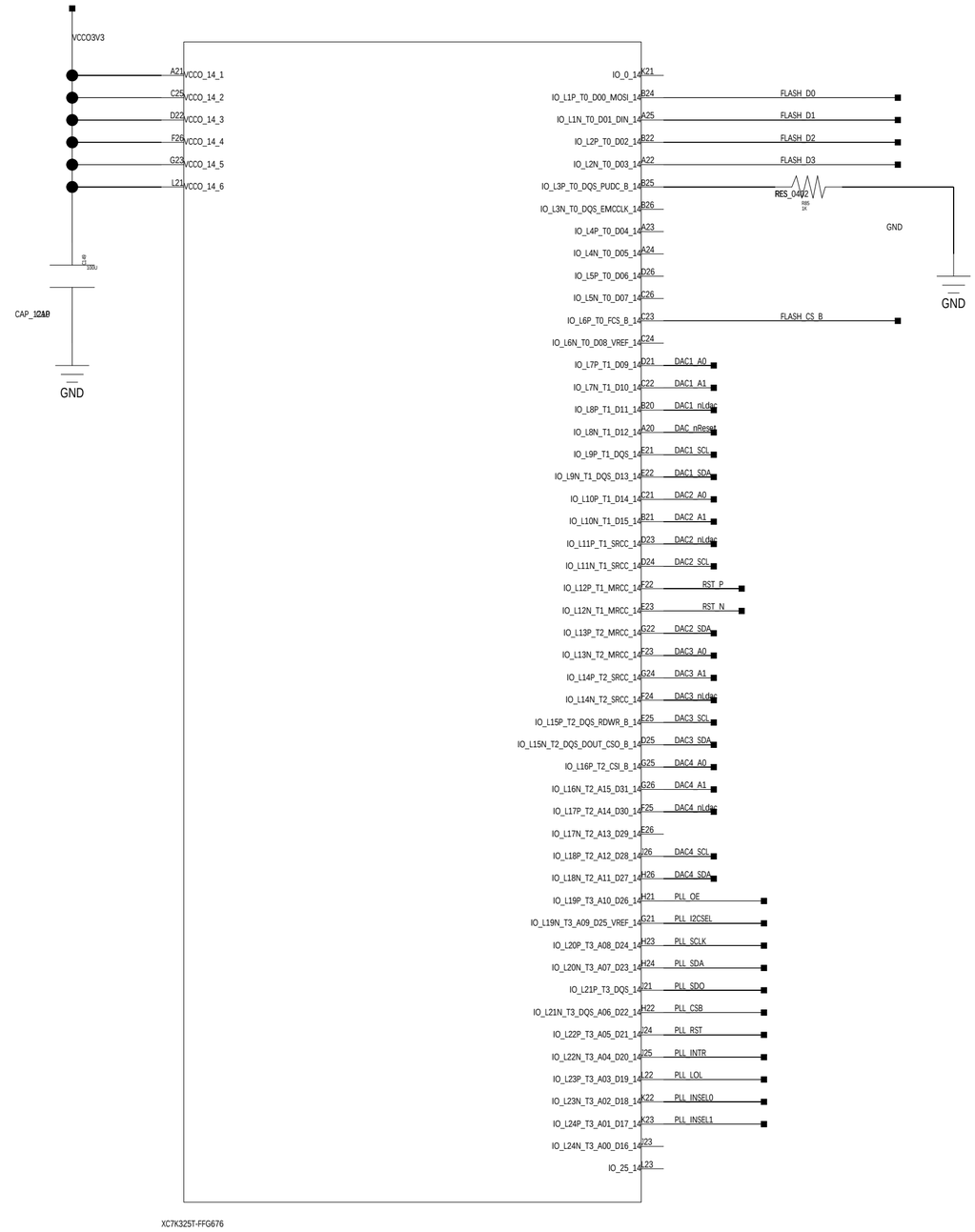

BANK14, SPI FLASH

CONTRACT NO.					
APPROVALS	DATE				
DRAWN					
CHECKED		SIZE	FSCM NO.	DWG. NO.	REV
ISSUED		C			
		SCALE		SHEET	

DWG. NO.
SH.
REV

H=4ND; V=4LA

REVISIONS			
REV	DESCRIPTION	DATE	APPROVED

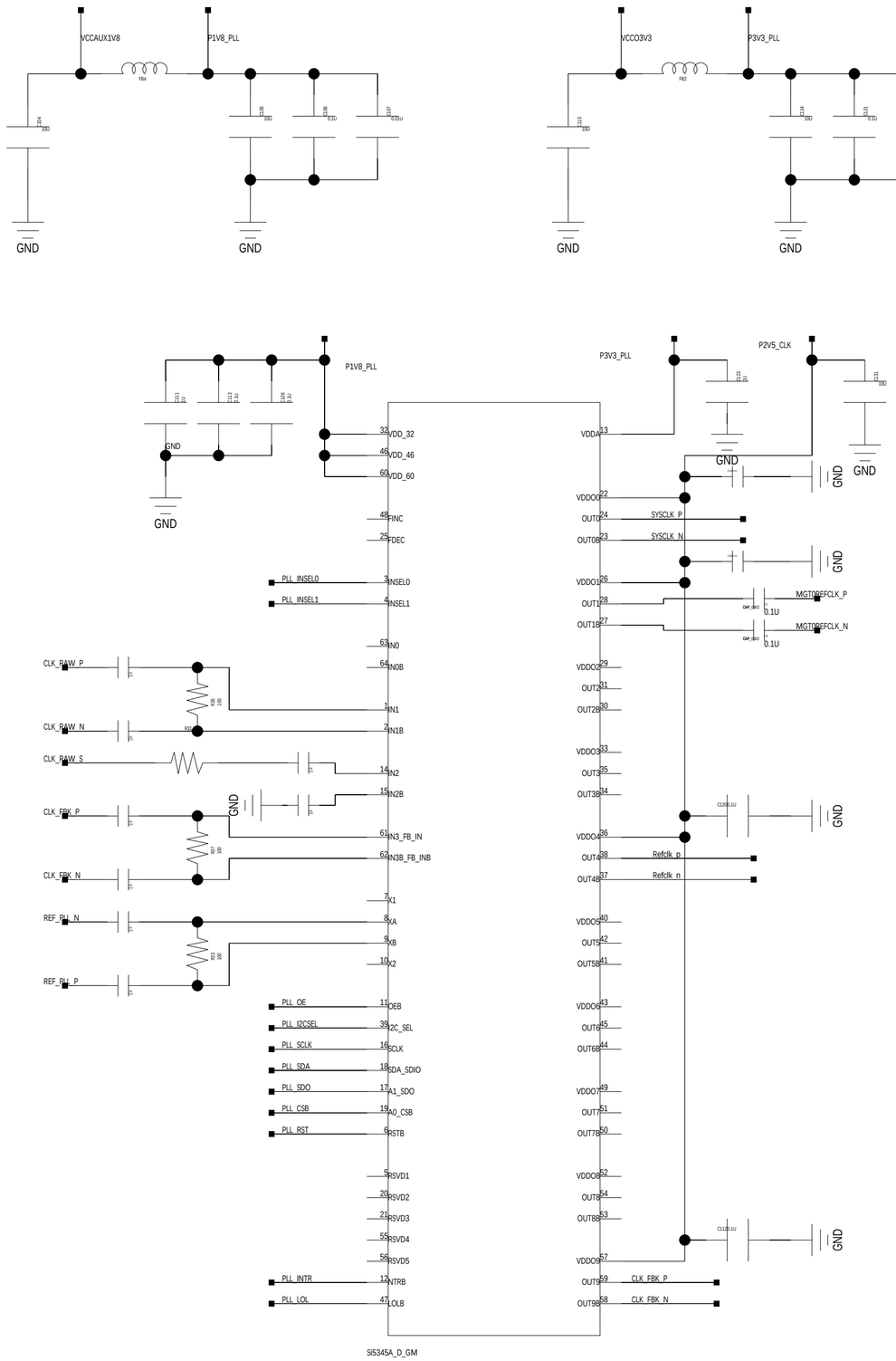

CONTRACT NO.					
APPROVALS	DATE				
DRAWN					
CHECKED		SIZE	FSCM NO.	DWG. NO.	REV
ISSUED		C			
		SCALE		SHEET	

H=4ND; V=4LA

REVISIONS			
REV	DESCRIPTION	DATE	APPROVED

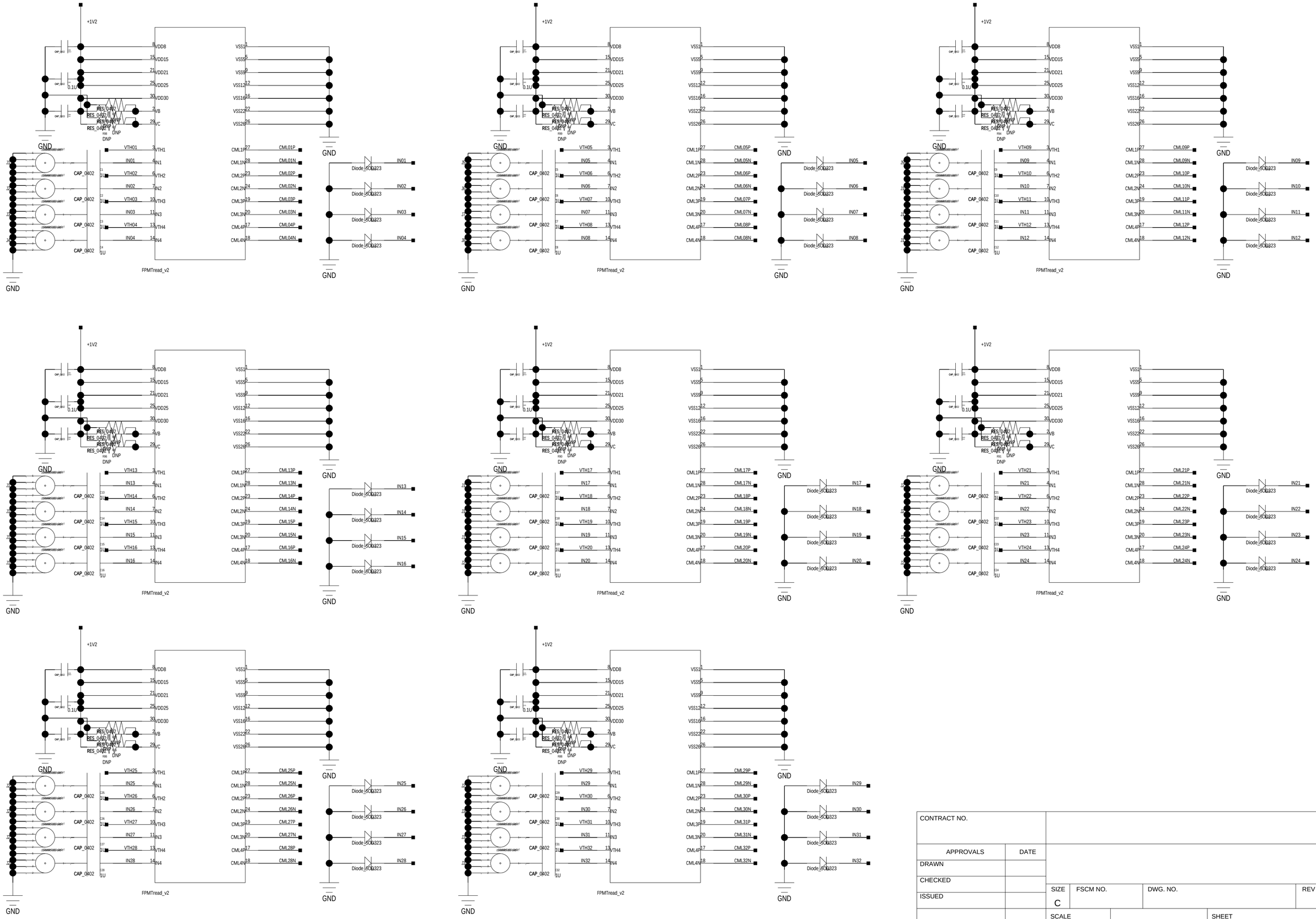

CONTRACT NO.					
APPROVALS	DATE				
DRAWN					
CHECKED		SIZE	FSCM NO.	DWG. NO.	REV
ISSUED		C			
		SCALE		SHEET	

DWG. NO.

SH.

REV

H=4ND; V=4LA

REVISIONS			
REV	DESCRIPTION	DATE	APPROVED

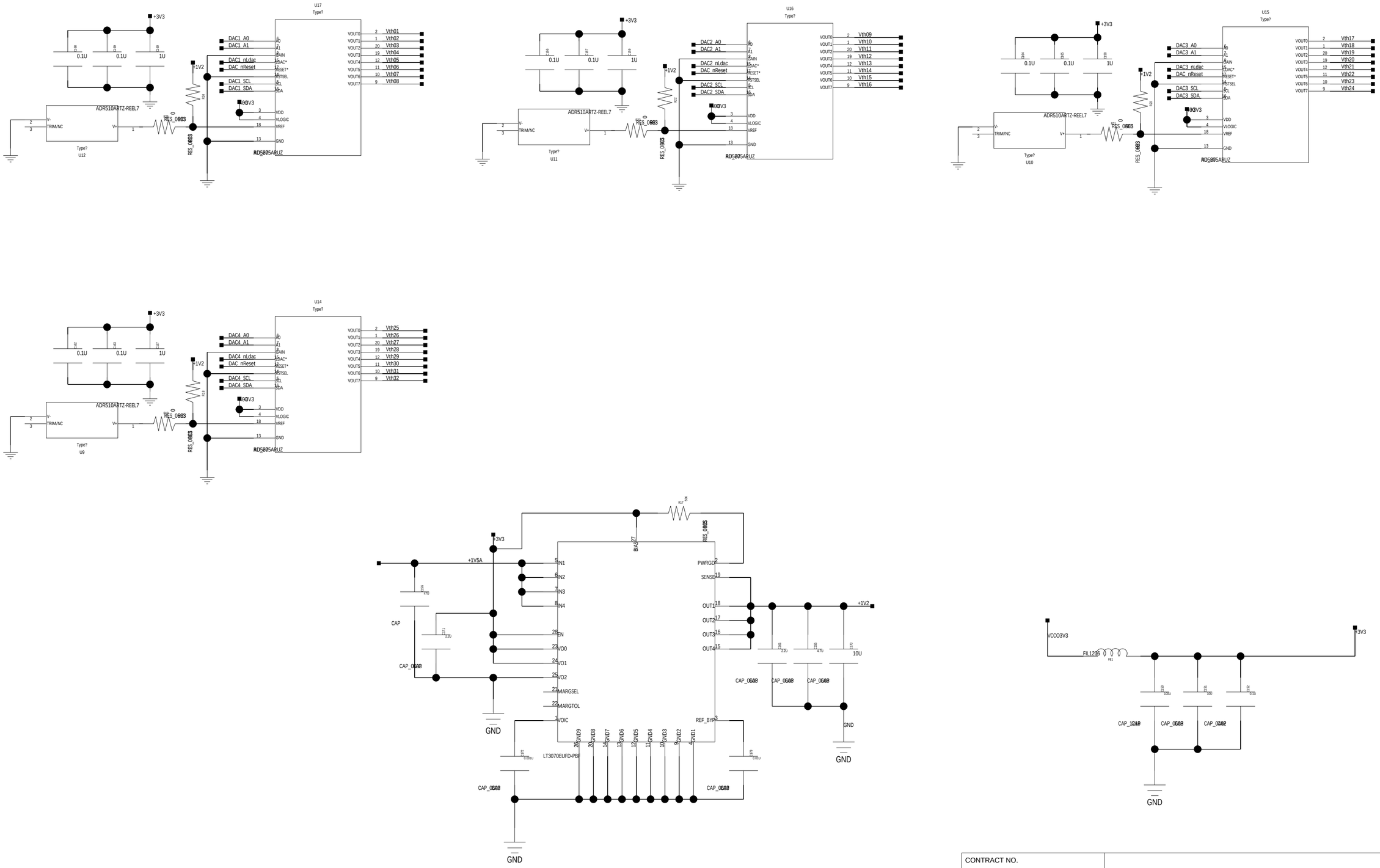

CONTRACT NO.					
APPROVALS	DATE				
DRAWN					
CHECKED		SIZE	FSCM NO.	DWG. NO.	REV
ISSUED		C			
		SCALE		SHEET	

DWG. NO.
SH.
REV

H=4ND; V=4LA

REVISIONS			
REV	DESCRIPTION	DATE	APPROVED

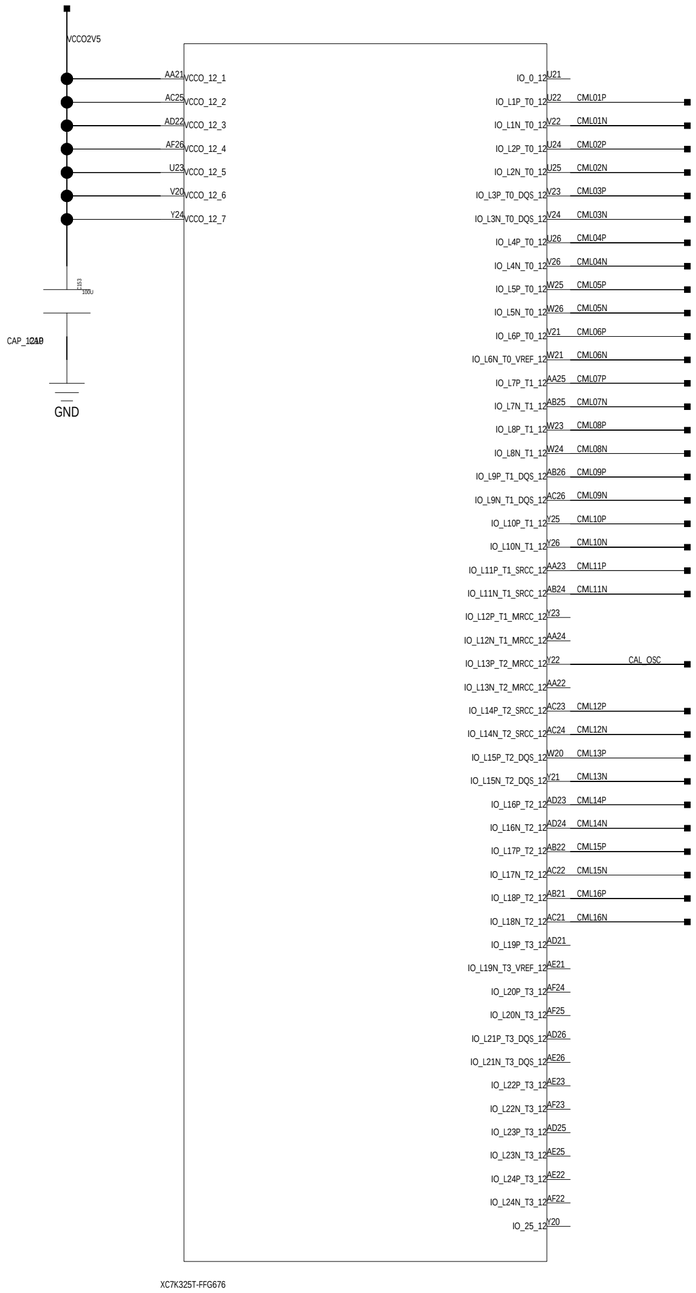

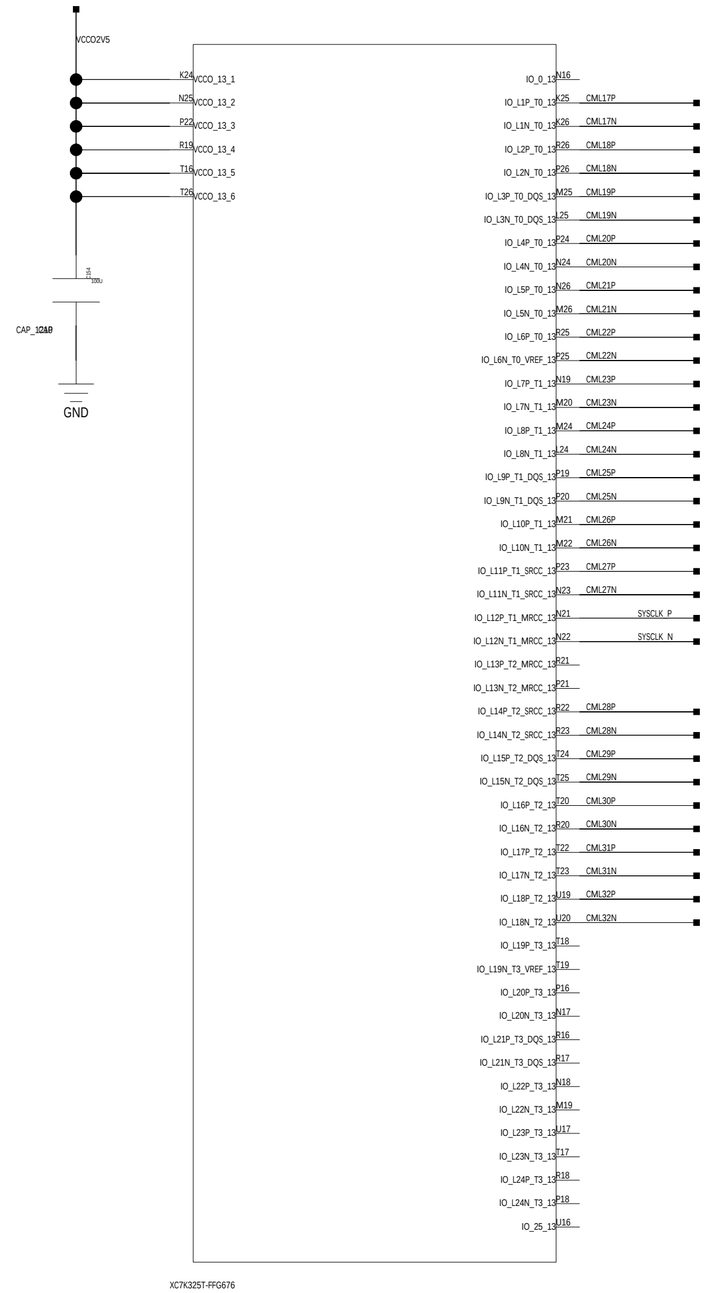

BANK12, BANK13

CONTRACT NO.					
APPROVALS	DATE				
DRAWN					
CHECKED		SIZE	FSCM NO.	DWG. NO.	REV
ISSUED		C			
		SCALE		SHEET	

DWG. NO.
SH.
REV

H=4ND; V=4LA

REVISIONS			
REV	DESCRIPTION	DATE	APPROVED

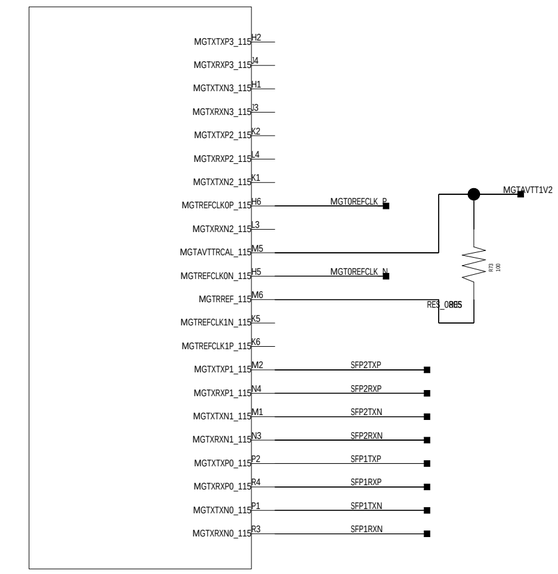

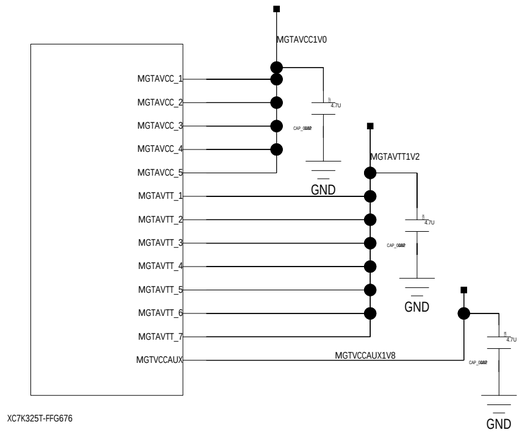

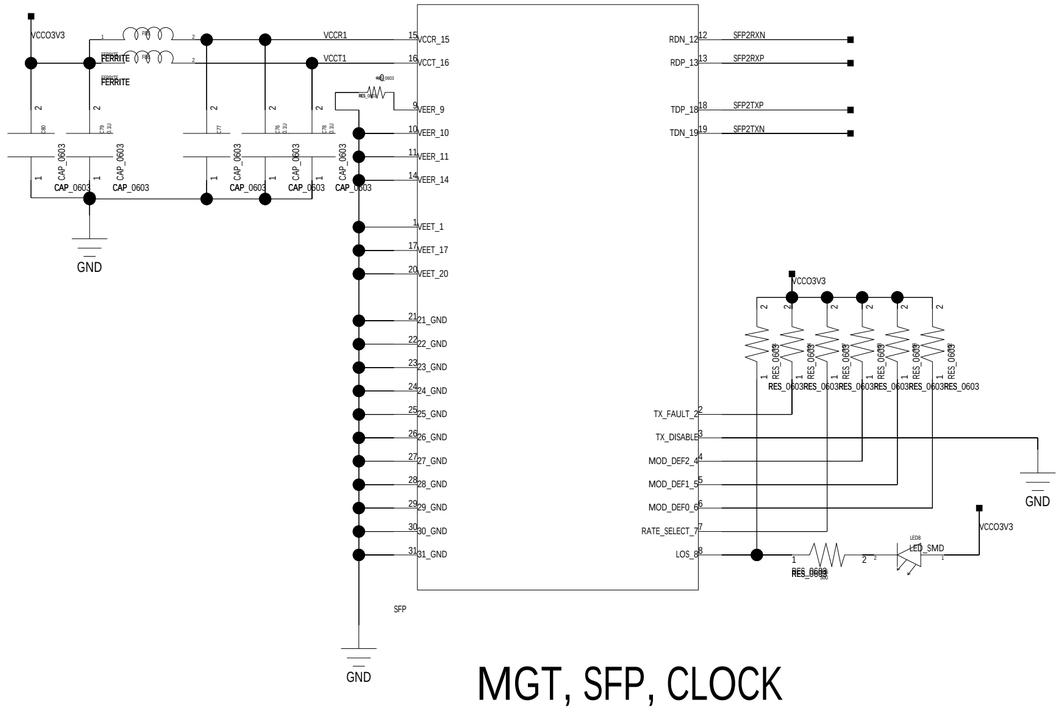

MGT, SFP, CLOCK

CONTRACT NO.					
APPROVALS	DATE				
DRAWN					
CHECKED		SIZE	FSCM NO.	DWG. NO.	REV
ISSUED		C			
		SCALE		SHEET	

DWG. NO.
SH.
REV

H=4ND; V=4LA

REVISIONS			
REV	DESCRIPTION	DATE	APPROVED

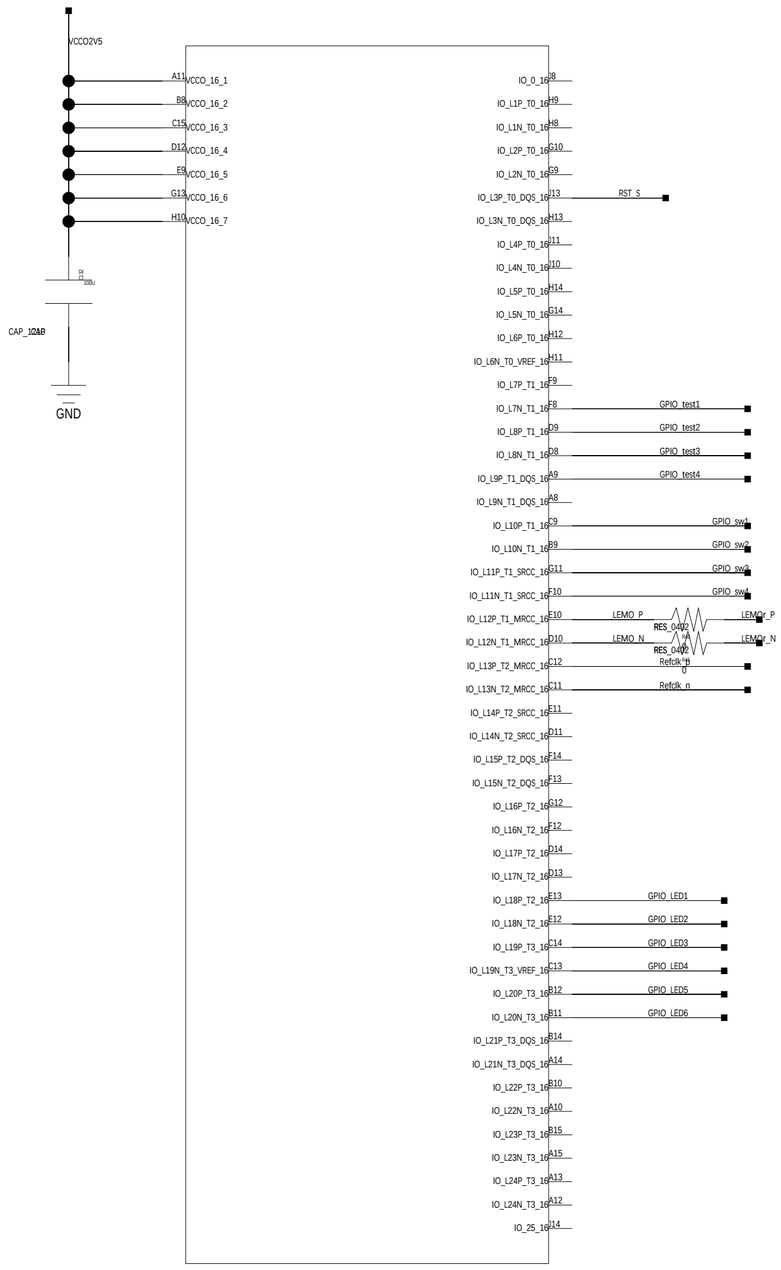

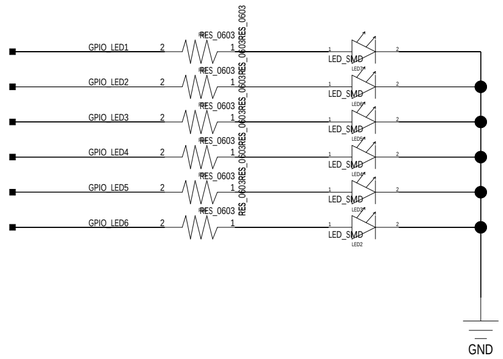

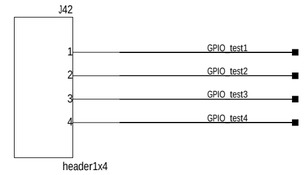

header1x4

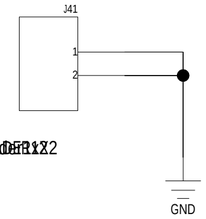

HEADER1X2

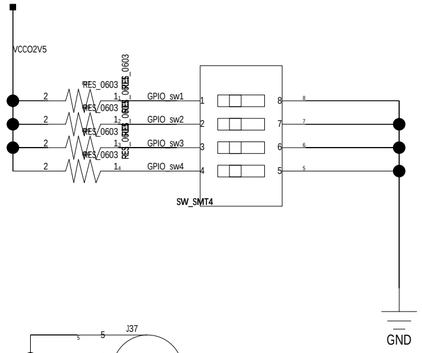

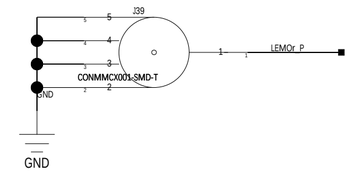

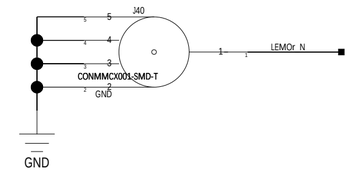

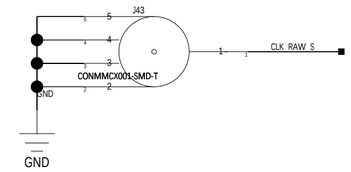

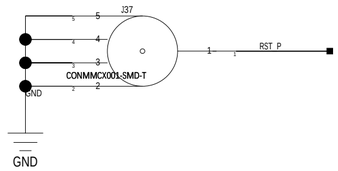

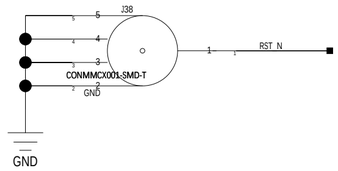

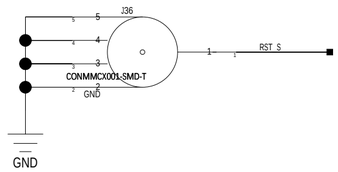

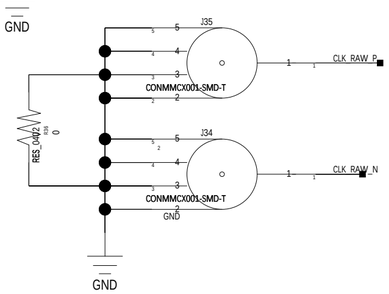

BANK16, GPIO

CONTRACT NO.					
APPROVALS	DATE				
DRAWN					
CHECKED		SIZE	FSCM NO.	DWG. NO.	REV
ISSUED		C			
		SCALE		SHEET	

DWG. NO.
SH.
REV

H=4ND; V=4LA

REVISIONS			
REV	DESCRIPTION	DATE	APPROVED

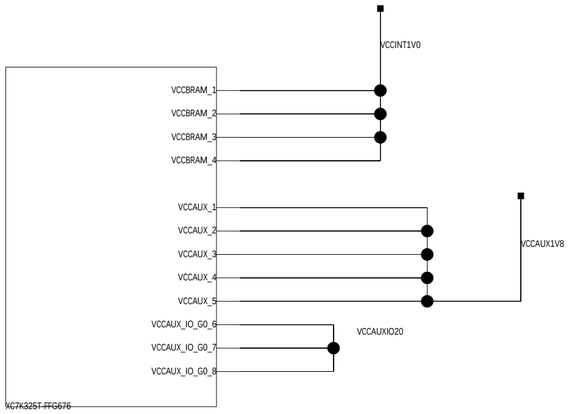

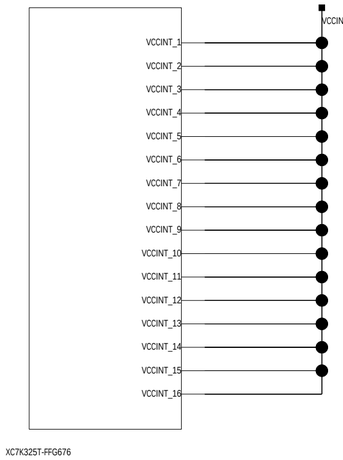

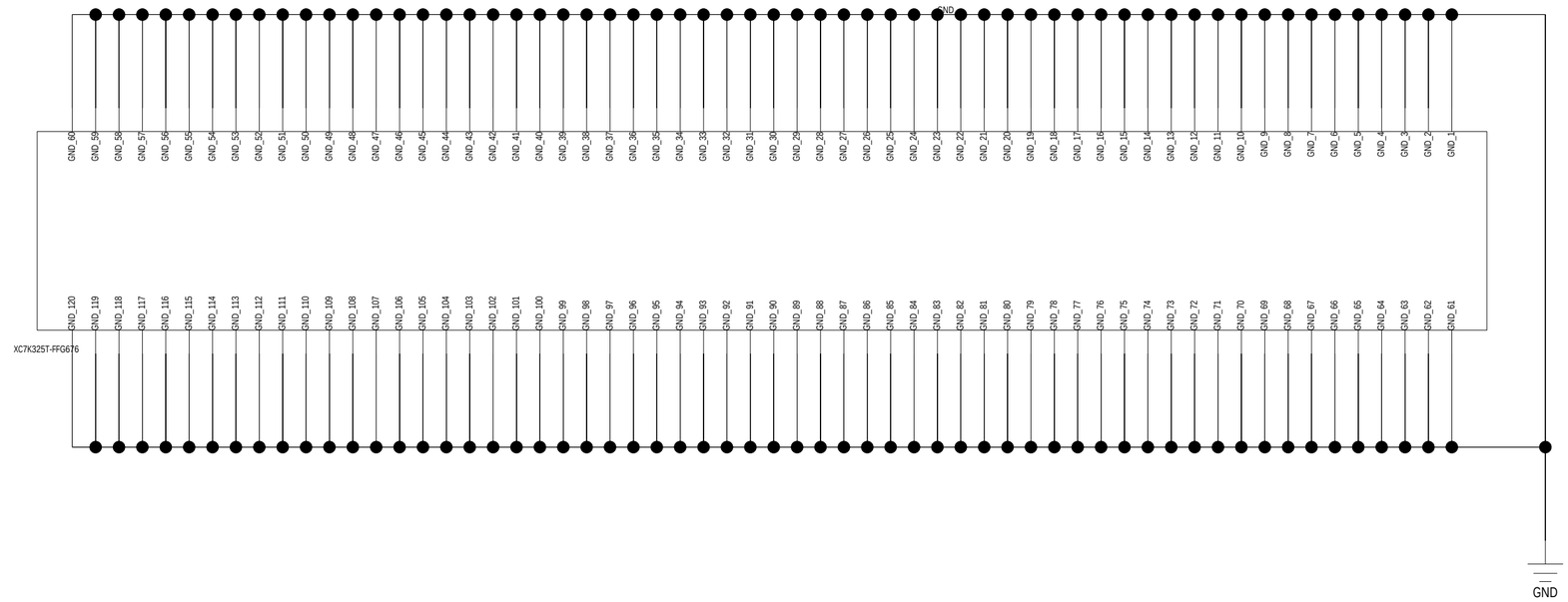

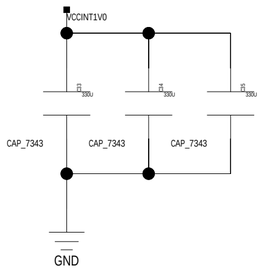

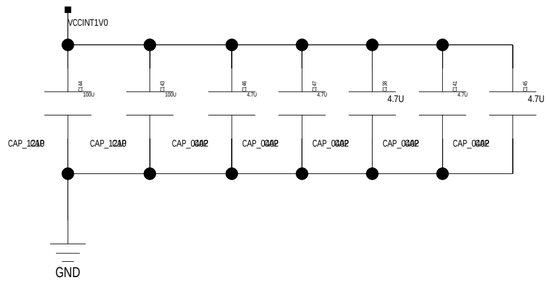

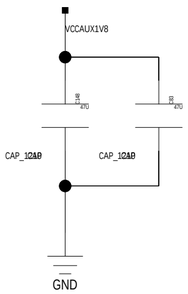

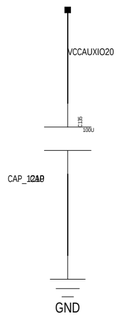

BANK PW, GND

CONTRACT NO.					
APPROVALS	DATE				
DRAWN					
CHECKED		SIZE	FSCM NO.	DWG. NO.	REV
ISSUED		C			
		SCALE		SHEET	

DWG. NO.
SH.
REV

H=4ND; V=4LA

REVISIONS			
REV	DESCRIPTION	DATE	APPROVED

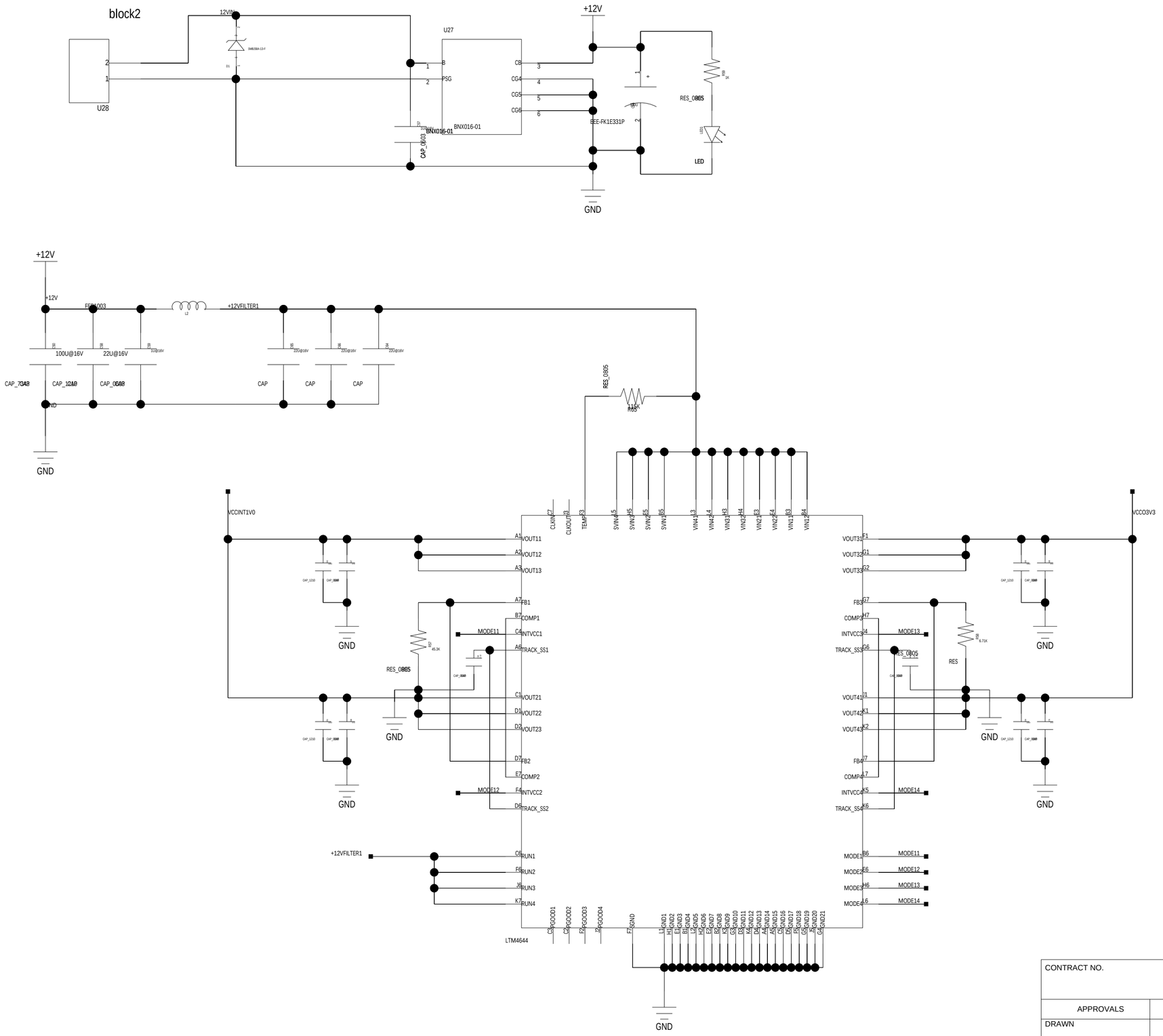

VCCINT, 3.3V

CONTRACT NO.					
APPROVALS	DATE				
DRAWN					
CHECKED		SIZE	FSCM NO.	DWG. NO.	REV
ISSUED		C			
		SCALE			SHEET

DWG. NO.
SH.
REV

H=4ND; V=4LA

REVISIONS			
REV	DESCRIPTION	DATE	APPROVED

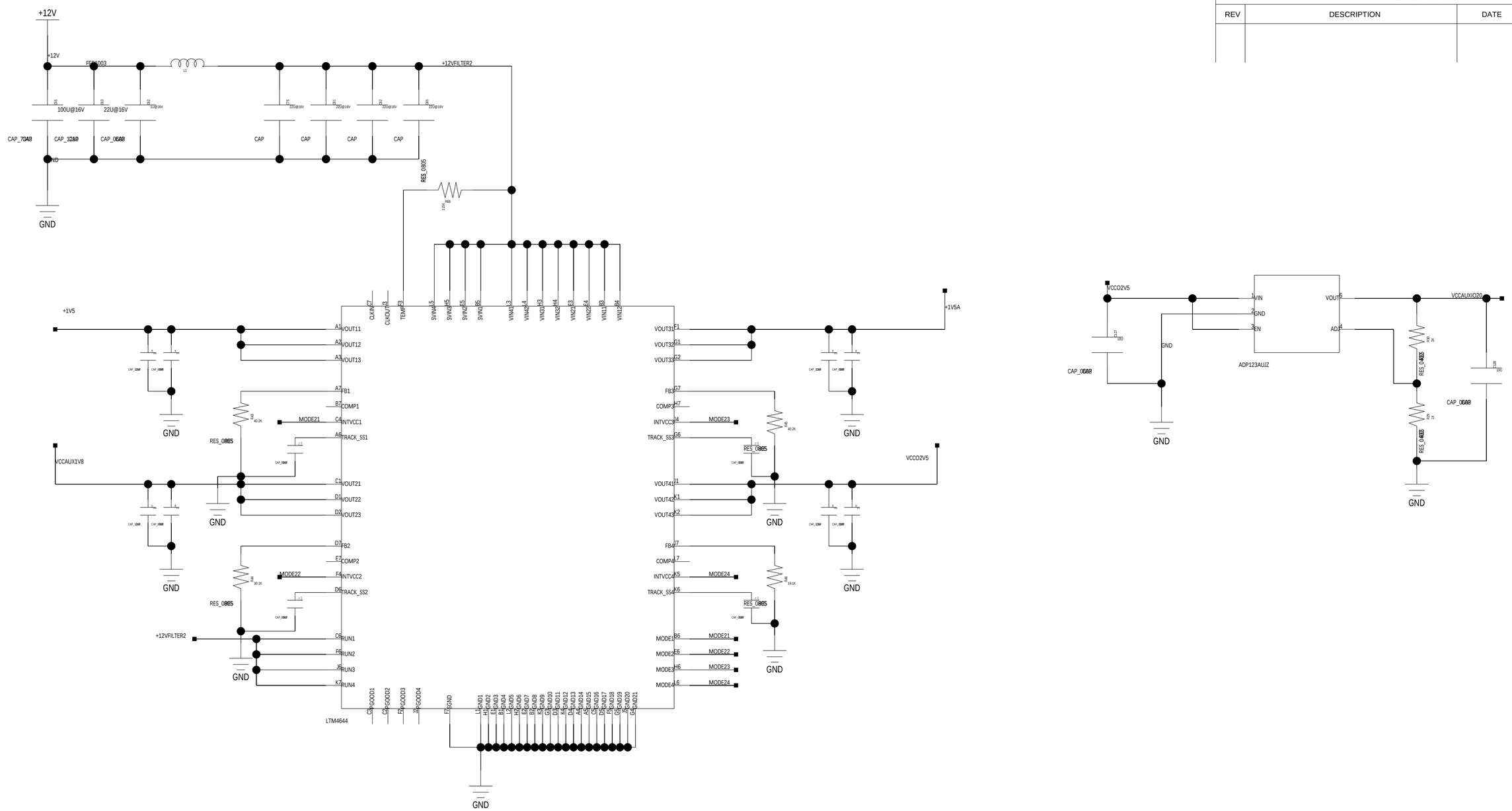

VCCO

CONTRACT NO.					
APPROVALS	DATE				
DRAWN					
CHECKED		SIZE	FSCM NO.	DWG. NO.	REV
ISSUED		C			
		SCALE		SHEET	

H=4ND; V=4LA

REVISIONS			
REV	DESCRIPTION	DATE	APPROVED

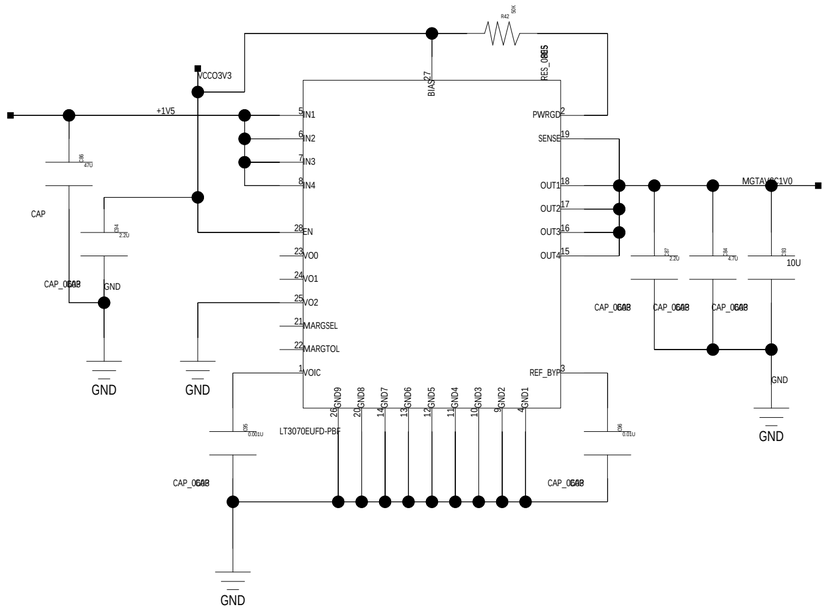

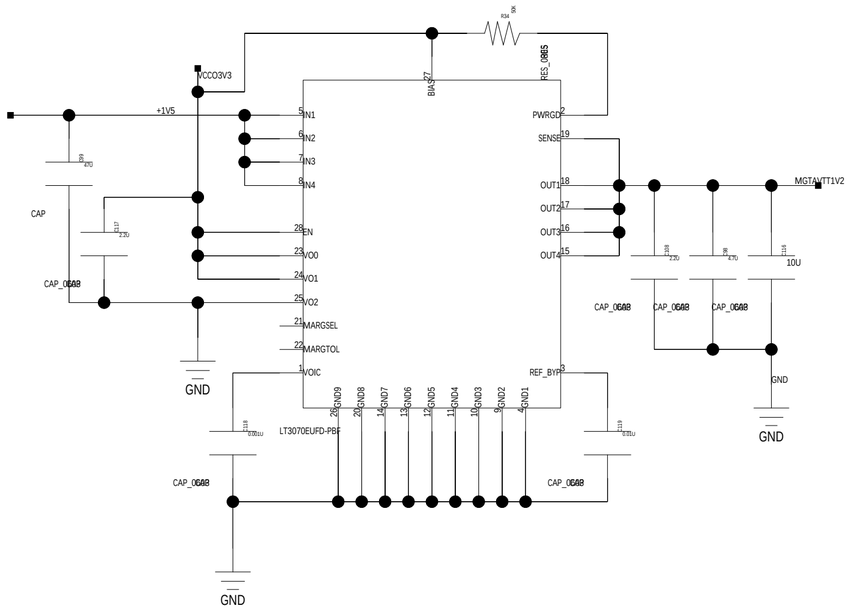

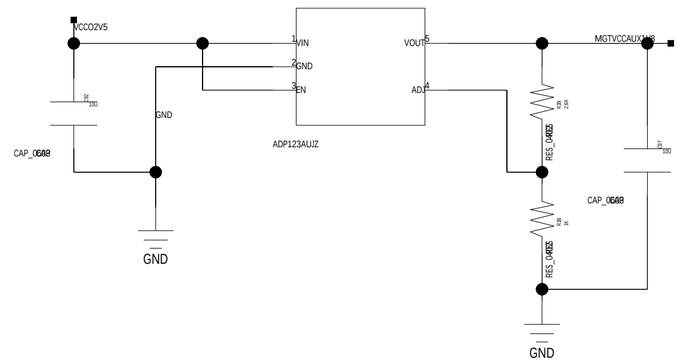

MGTPW

CONTRACT NO.					
APPROVALS	DATE				
DRAWN					
CHECKED		SIZE	FSCM NO.	DWG. NO.	REV
ISSUED		C			
		SCALE		SHEET	

DWG. NO.
SH.
REV

H=4ND; V=4LA