REVISIONS			
REV	DESCRIPTION	DATE	APPROVED

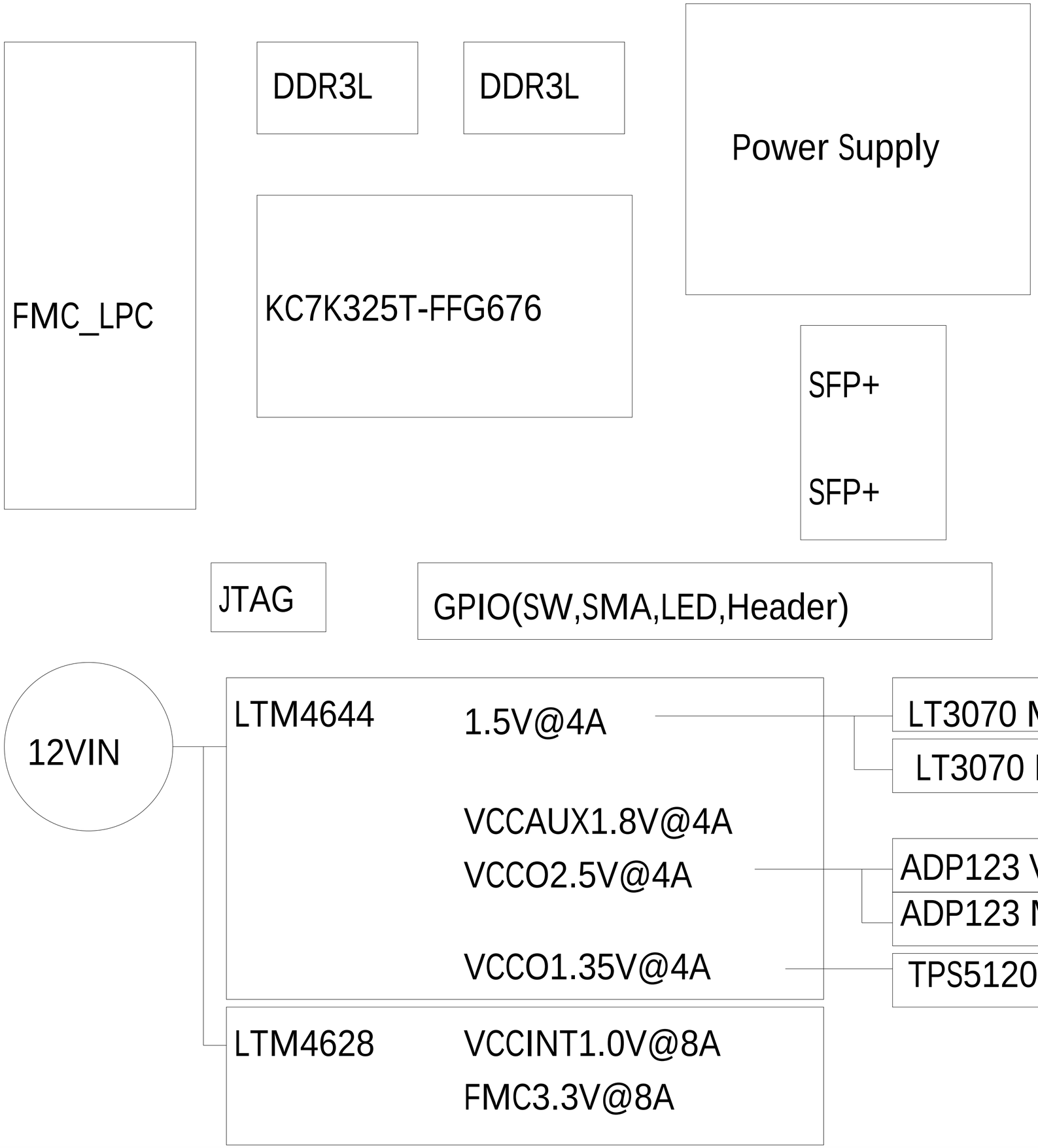

CONTRACT NO.				
APPROVALS	DATE			
DRAWN				
CHECKED		SIZE C	FSCM NO.	DWG. NO.	REV
ISSUED				
		SCALE		SHEET

DWG. NO.
SH.
REV.

H=4ND; V=4LA

REVISIONS			
REV	DESCRIPTION	DATE	APPROVED

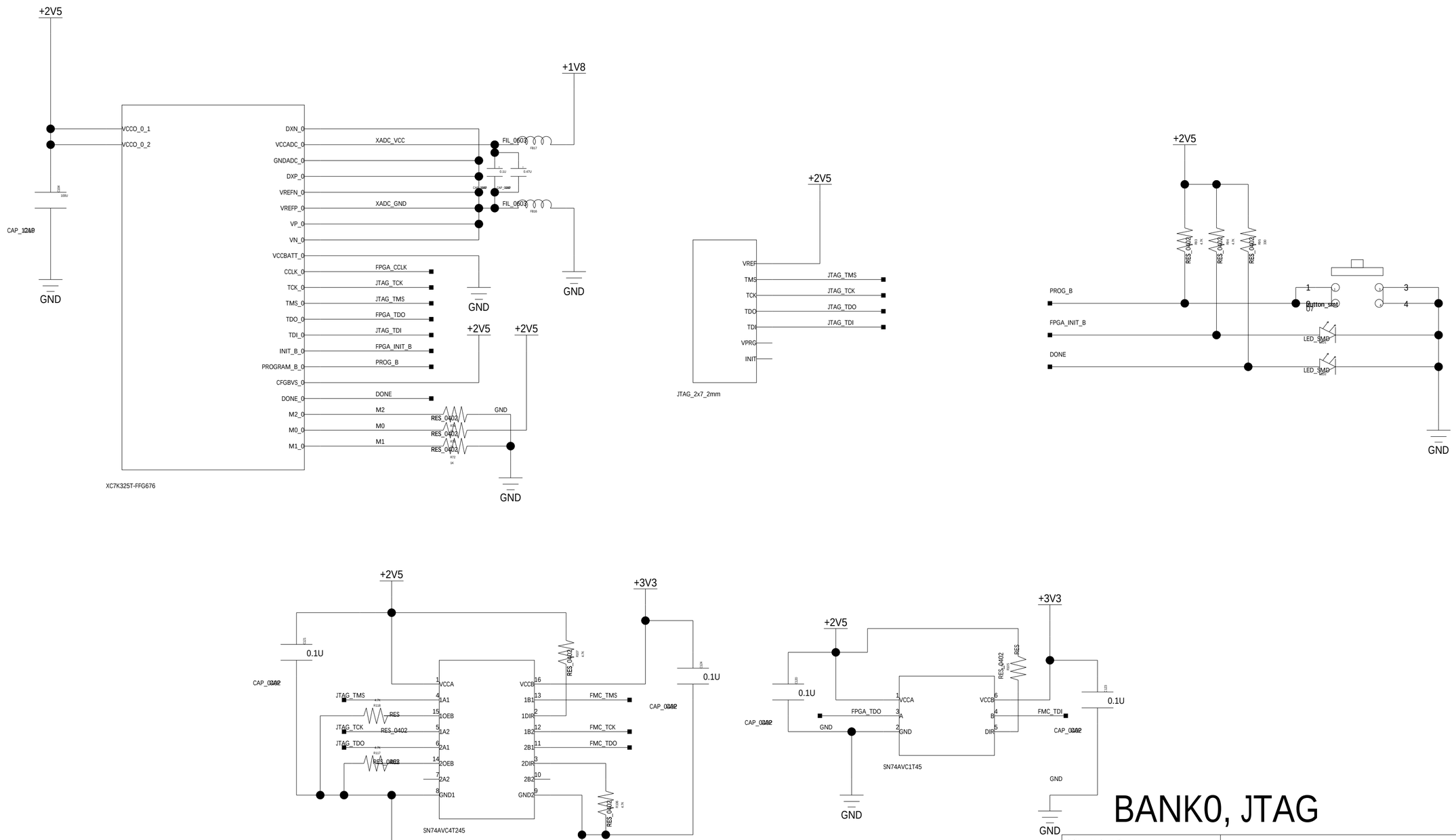

BANK0, JTAG

CONTRACT NO.				
APPROVALS	DATE			
DRAWN				
CHECKED		SIZE	FSCM NO.	DWG. NO.	REV
ISSUED		C			
		SCALE		SHEET

DWG. NO.
SH.
REV

H=4ND; V=4LA

REVISIONS			
REV	DESCRIPTION	DATE	APPROVED

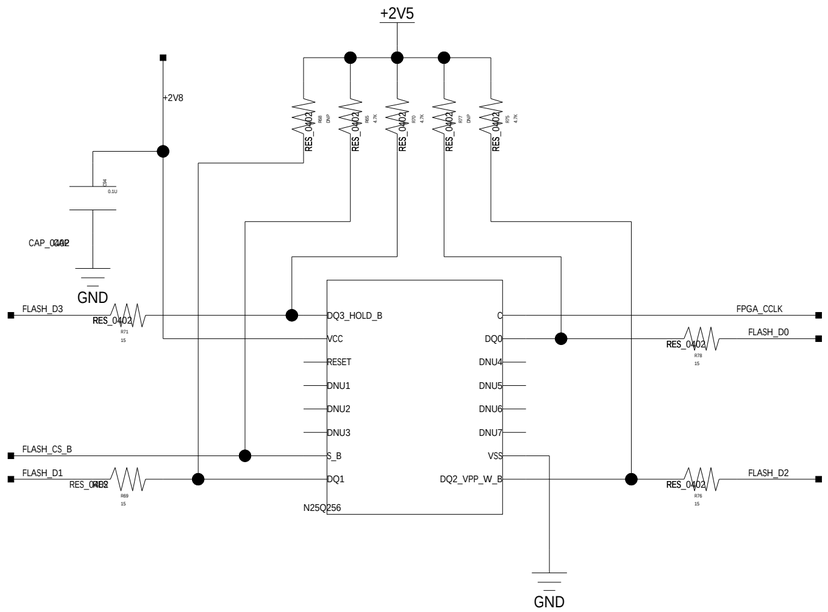

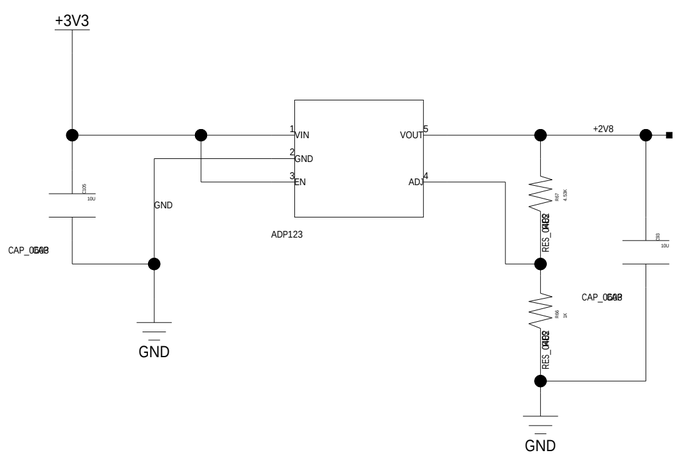

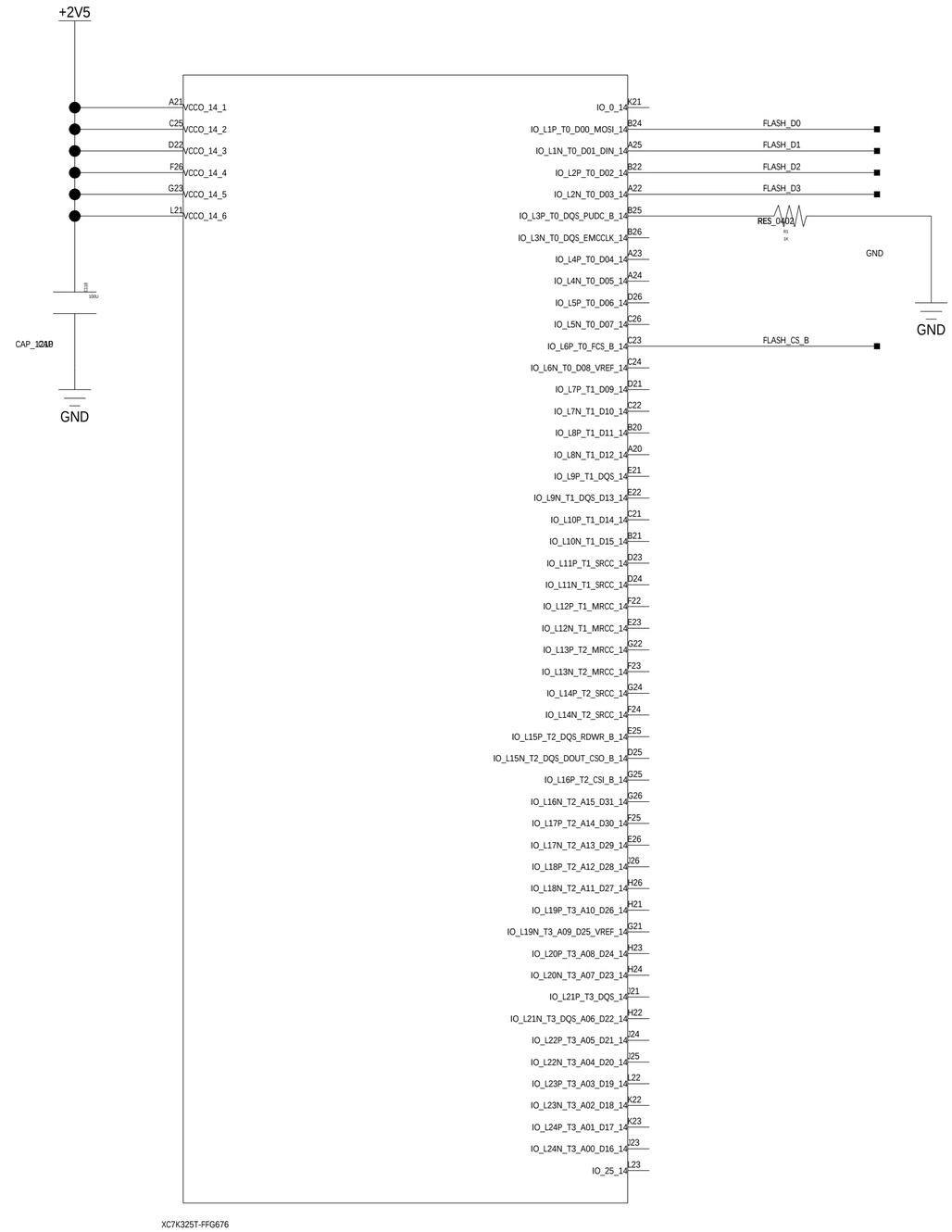

BANK14, SPI FLASH

CONTRACT NO.					
APPROVALS	DATE				
DRAWN					
CHECKED		SIZE	FSCM NO.	DWG. NO.	REV
ISSUED		C			
		SCALE		SHEET	

DWG. NO.
SH.
REV

H=4ND; V=4LA

REVISIONS			
REV	DESCRIPTION	DATE	APPROVED

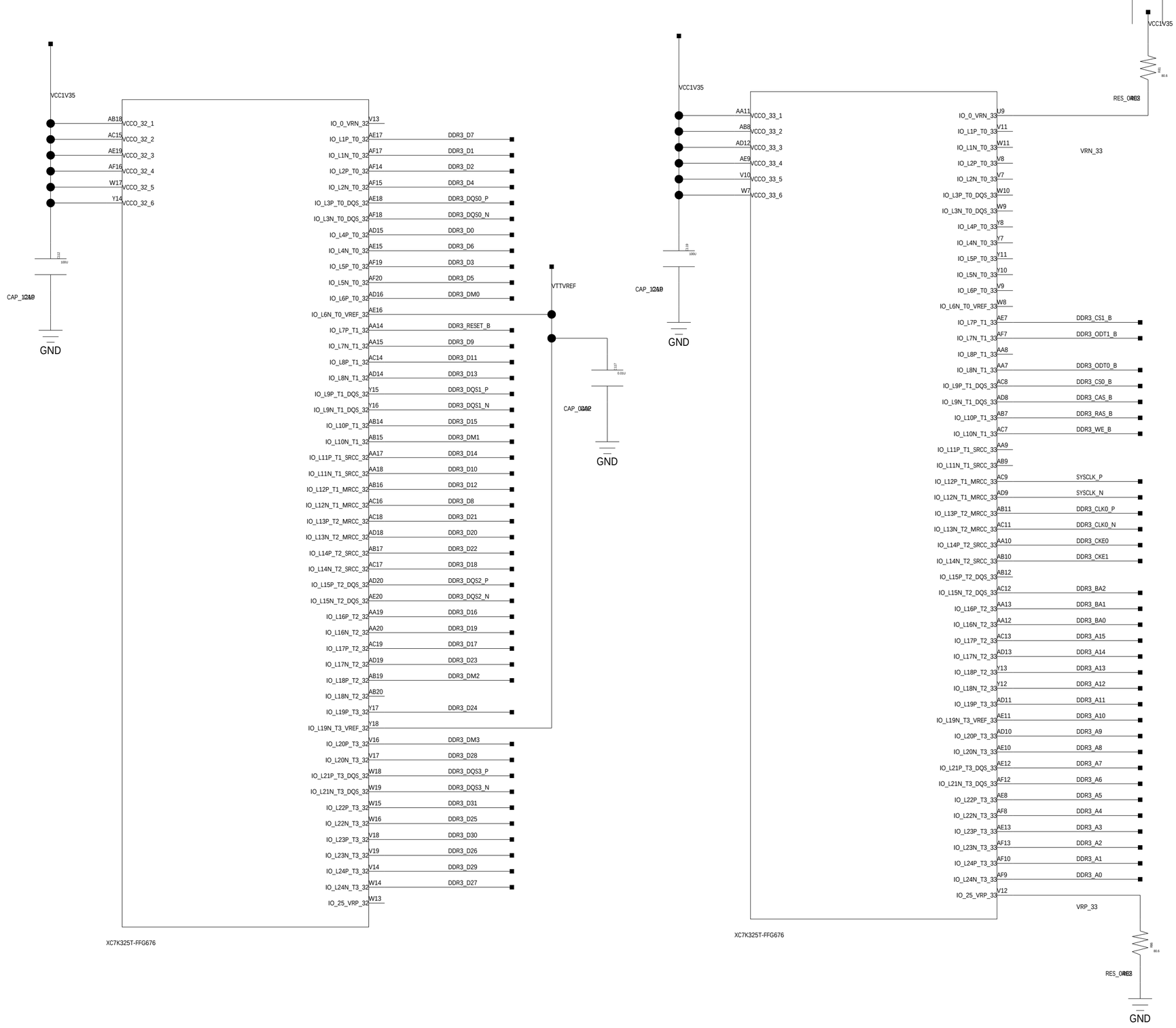

BANK32, BANK33

CONTRACT NO.					
APPROVALS	DATE				
DRAWN					
CHECKED		SIZE	FSCM NO.	DWG. NO.	REV
ISSUED		C			
		SCALE		SHEET	

DWG. NO.
SH.
REV

H=4ND; V=4LA

REVISIONS			
REV	DESCRIPTION	DATE	APPROVED

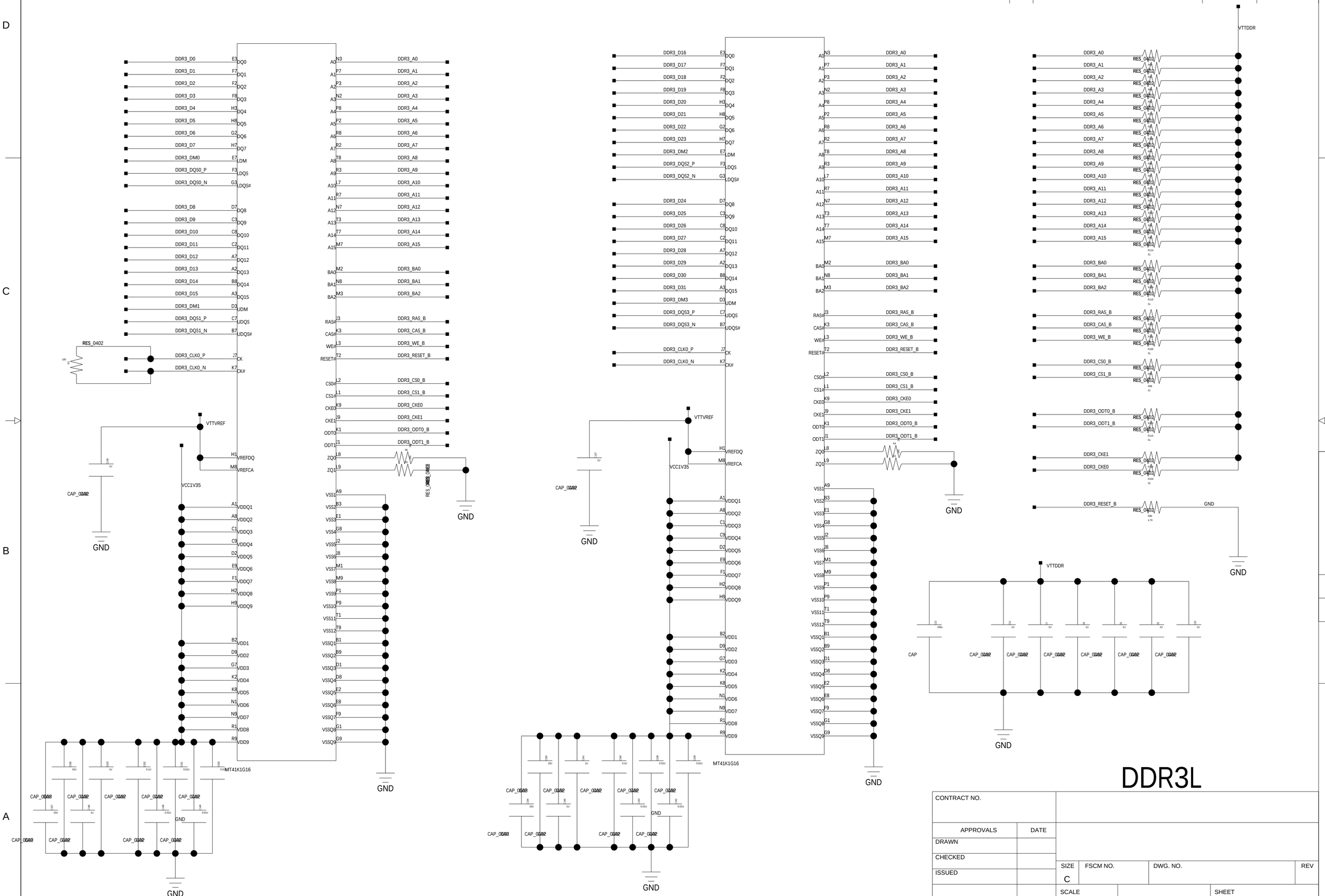

DDR3L

CONTRACT NO.					
APPROVALS	DATE				
DRAWN					
CHECKED		SIZE	FSCM NO.	DWG. NO.	REV
ISSUED		C			
		SCALE		SHEET	

H=4ND; V=4LA

REVISIONS			
REV	DESCRIPTION	DATE	APPROVED

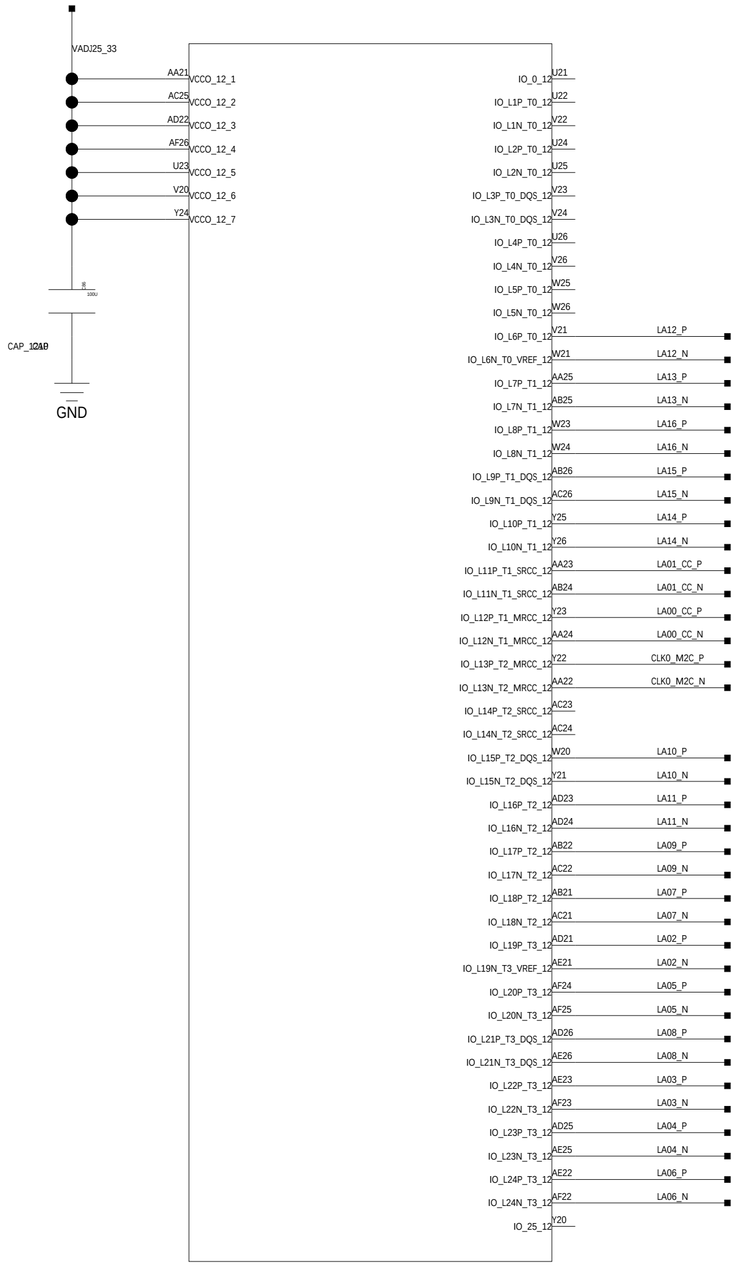

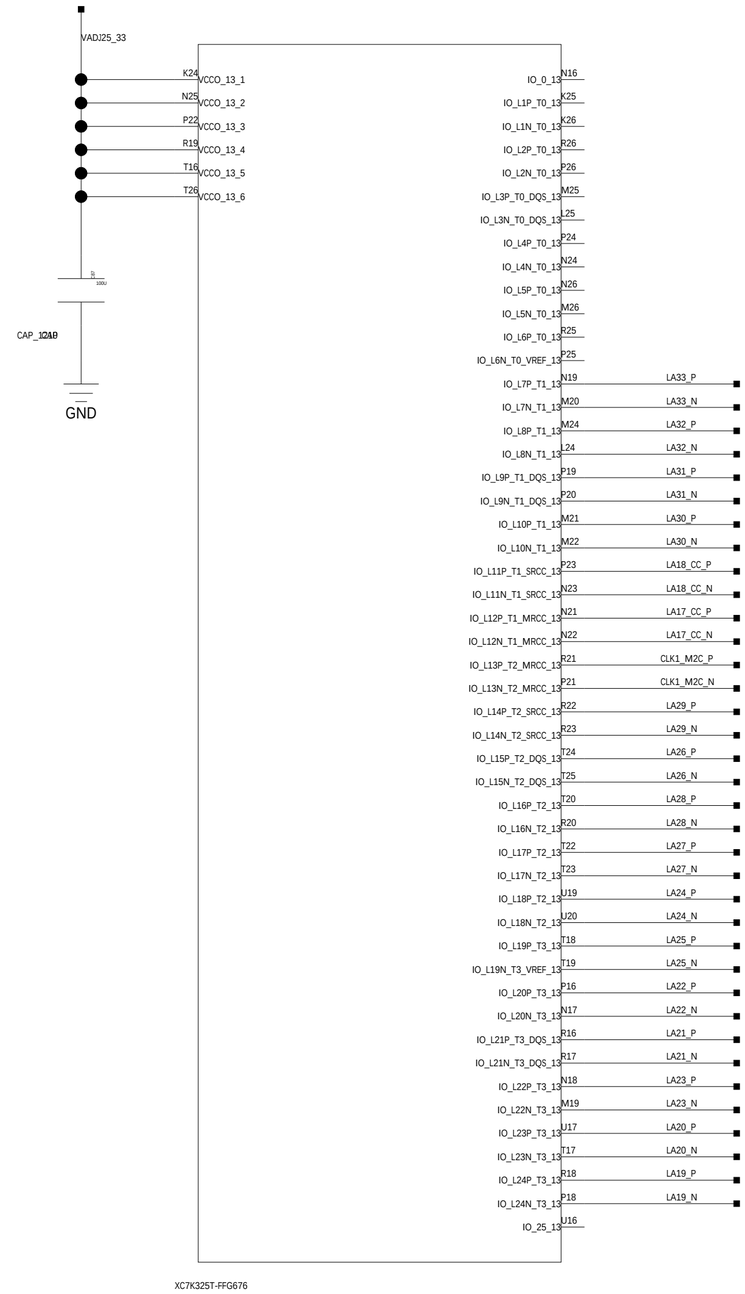

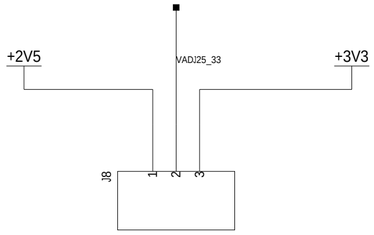

header1x3

BANK12, BANK13

CONTRACT NO.					
APPROVALS	DATE				
DRAWN					
CHECKED		SIZE	FSCM NO.	DWG. NO.	REV
ISSUED		C			
		SCALE		SHEET	

DWG. NO.
SH.
REV

H=4ND; V=4LA

REVISIONS			
REV	DESCRIPTION	DATE	APPROVED

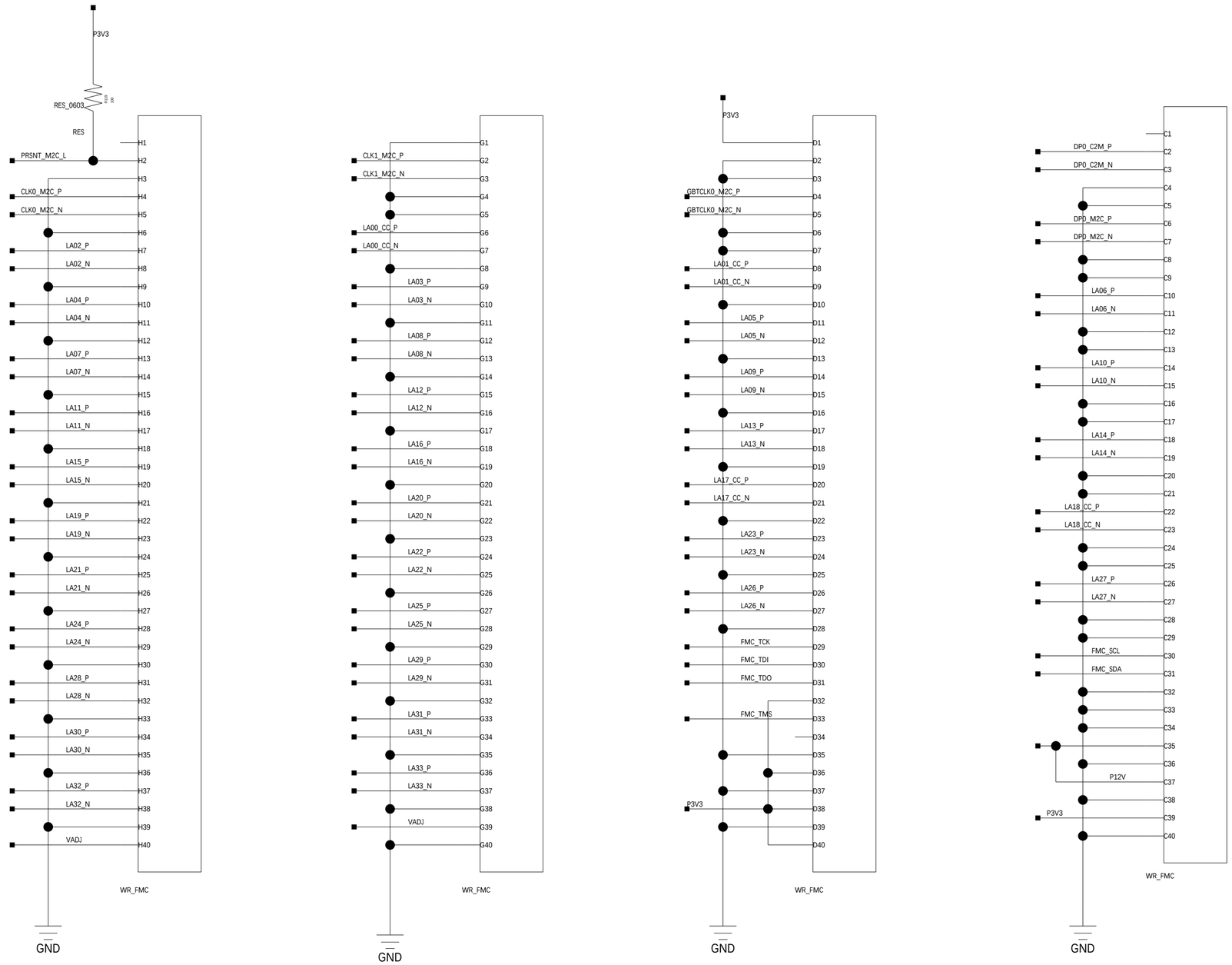

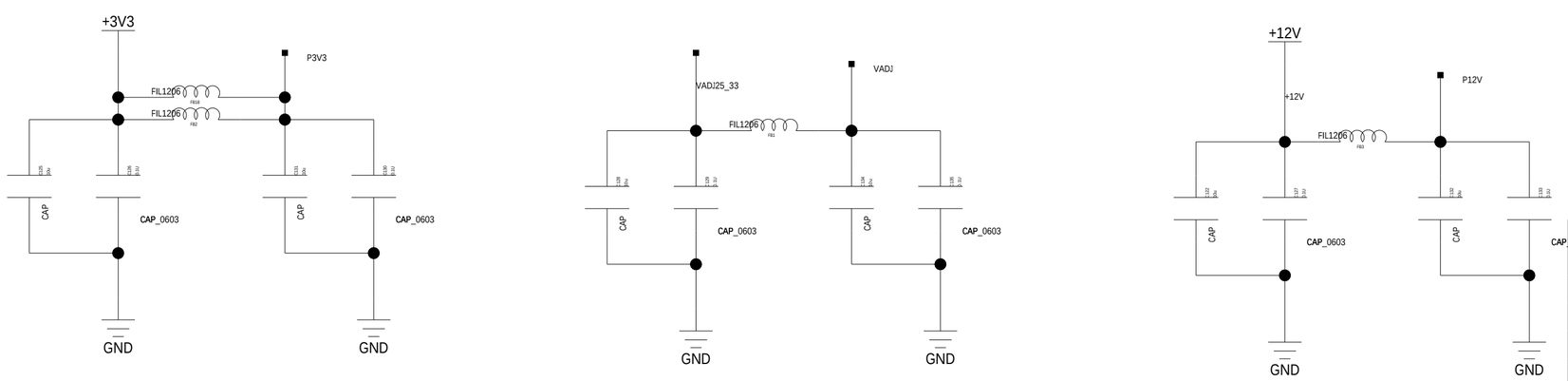

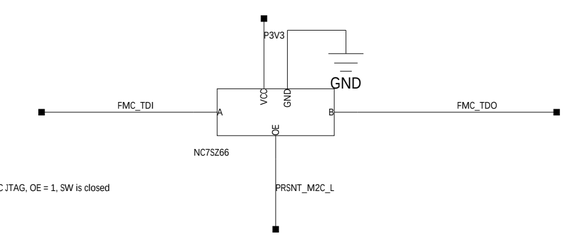

FMC CONNECTOR

CONTRACT NO.					
APPROVALS	DATE				
DRAWN					
CHECKED		SIZE	FSCM NO.	DWG. NO.	REV
ISSUED		C			
		SCALE		SHEET	

DWG. NO.
SH.
REV

H=4ND; V=4LA

REVISIONS			
REV	DESCRIPTION	DATE	APPROVED

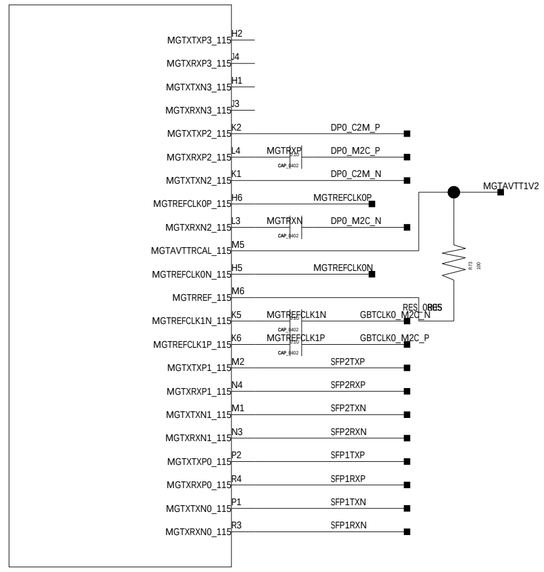

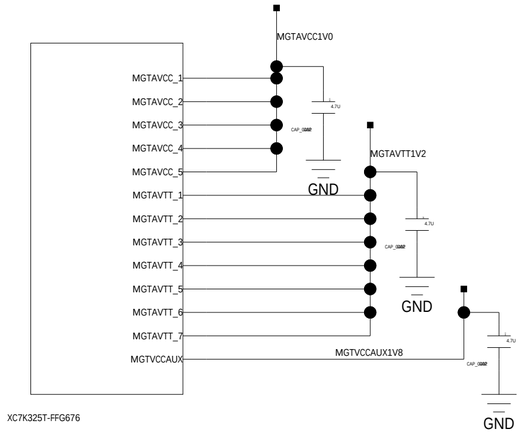

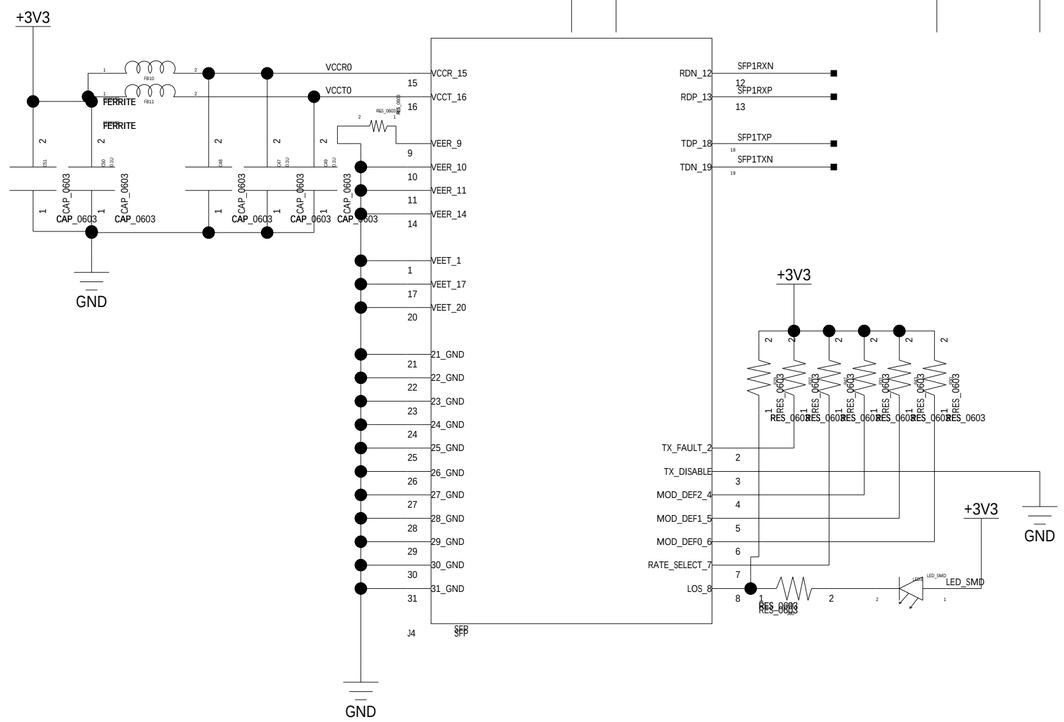

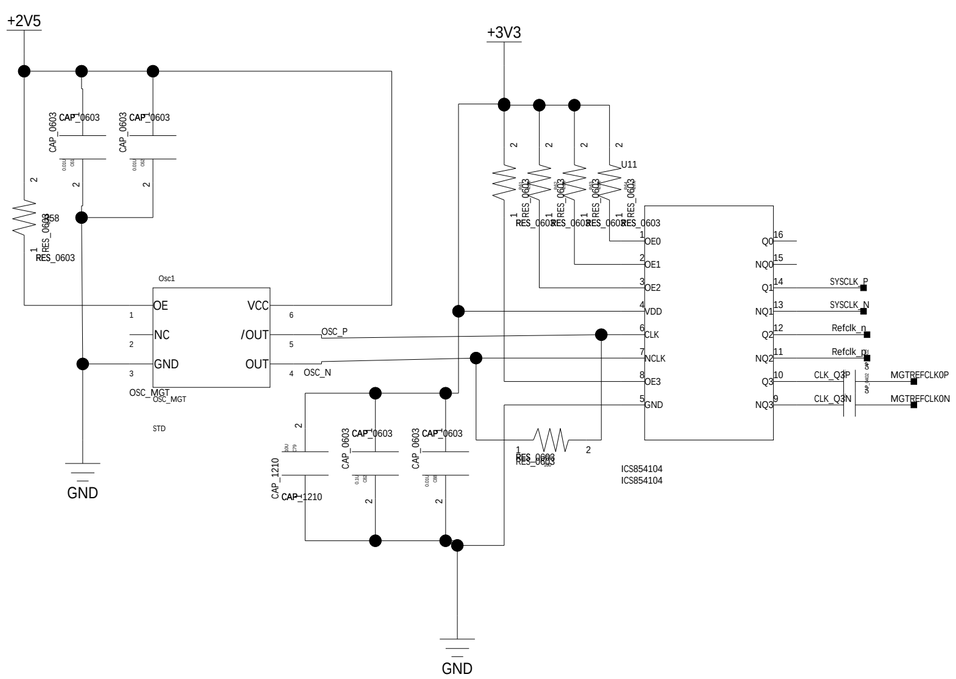

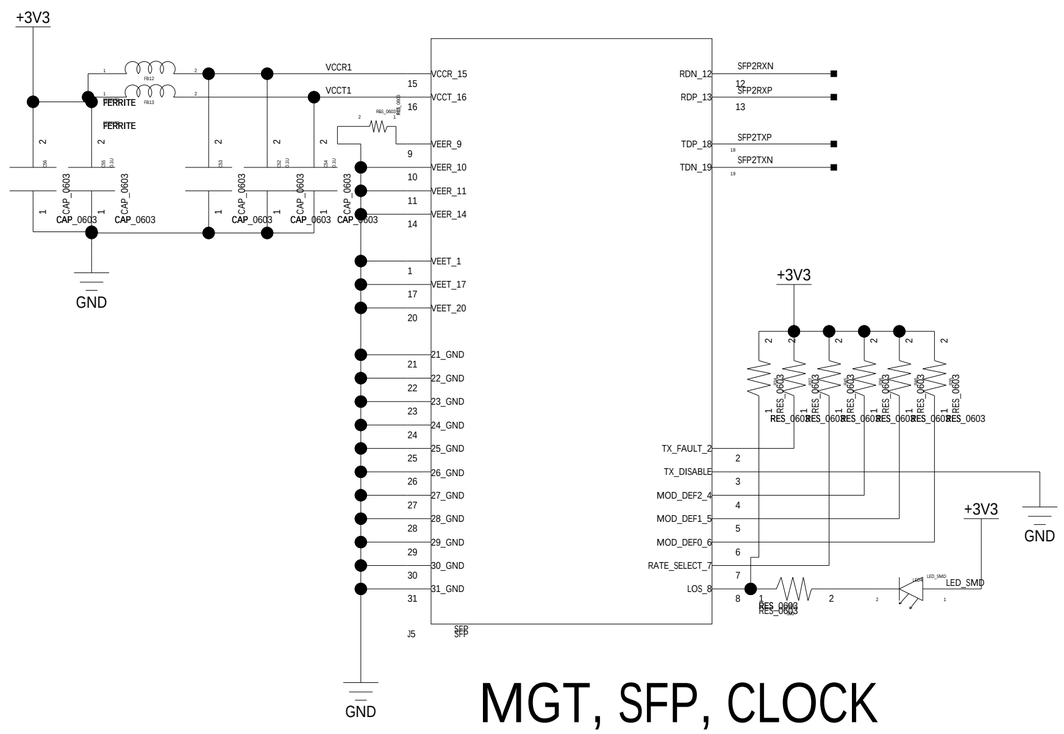

MGT, SFP, CLOCK

CONTRACT NO.					
APPROVALS	DATE				
DRAWN					
CHECKED		SIZE	FSCM NO.	DWG. NO.	REV
ISSUED		C			
		SCALE			SHEET

DWG. NO.
SH.
REV.

H=4ND; V=4LA

REVISIONS			
REV	DESCRIPTION	DATE	APPROVED

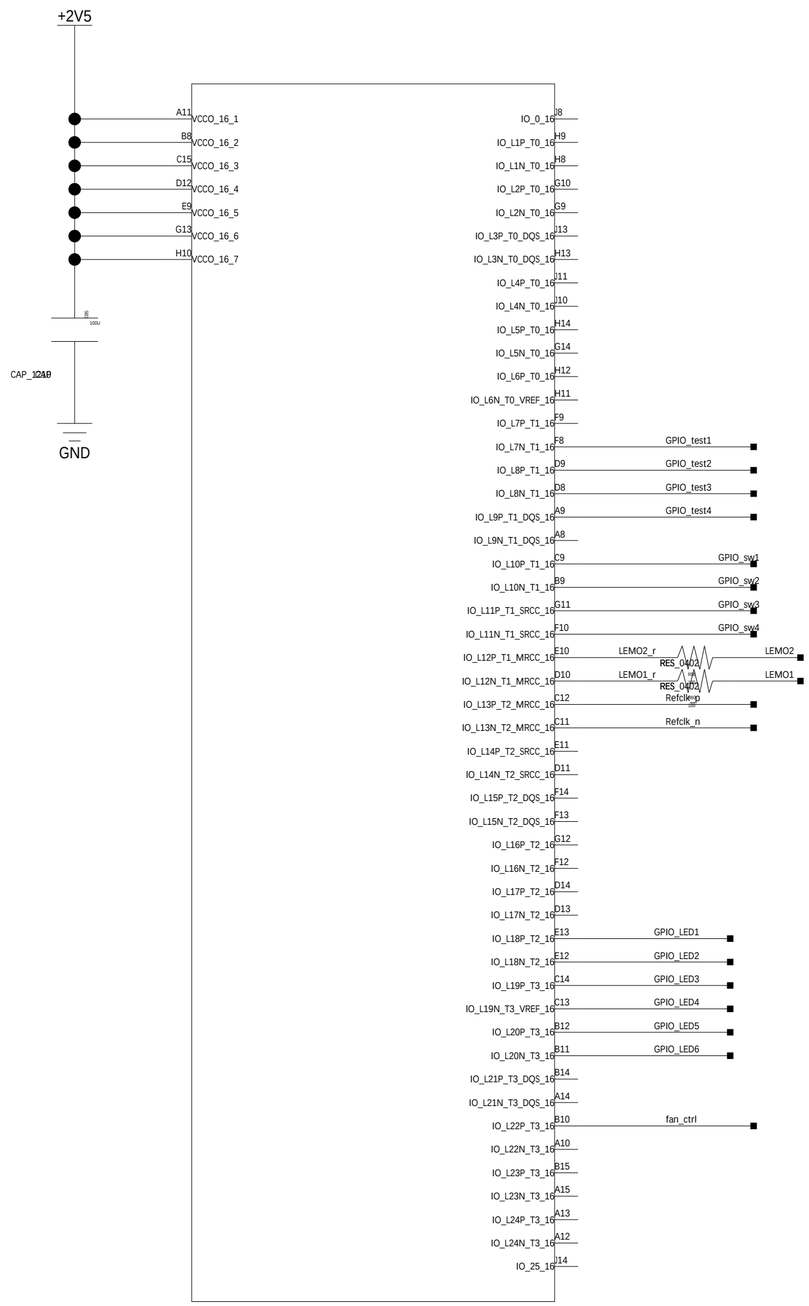

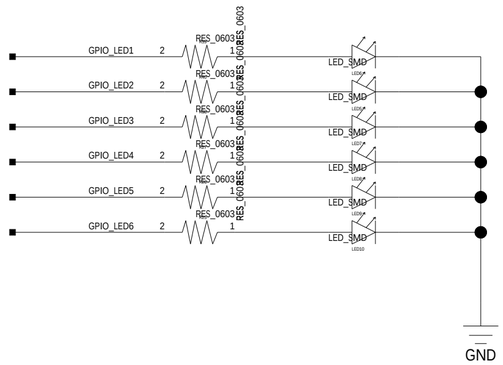

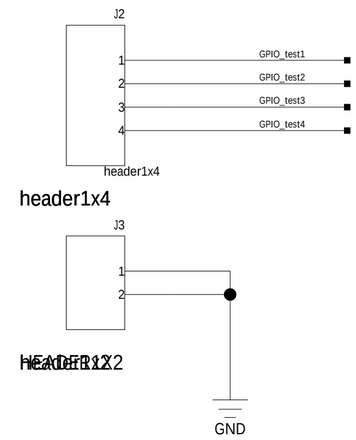

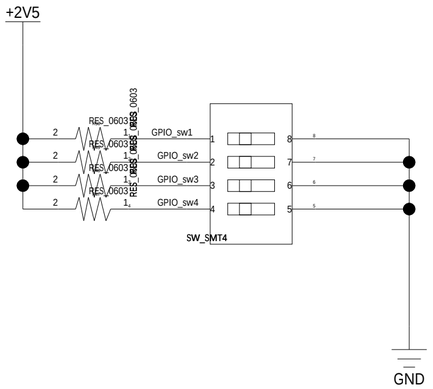

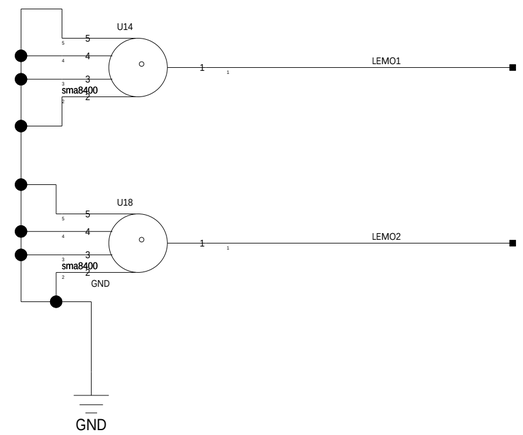

BANK16, GPIO

CONTRACT NO.					
APPROVALS	DATE				
DRAWN					
CHECKED		SIZE	FSCM NO.	DWG. NO.	REV
ISSUED		C			
		SCALE		SHEET	

DWG. NO.
SH.
REV.

H=4ND; V=4LA

REVISIONS			
REV	DESCRIPTION	DATE	APPROVED

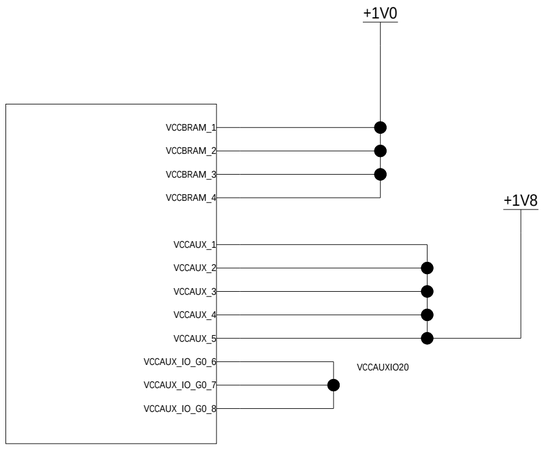

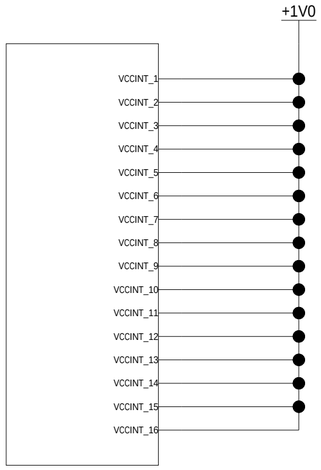

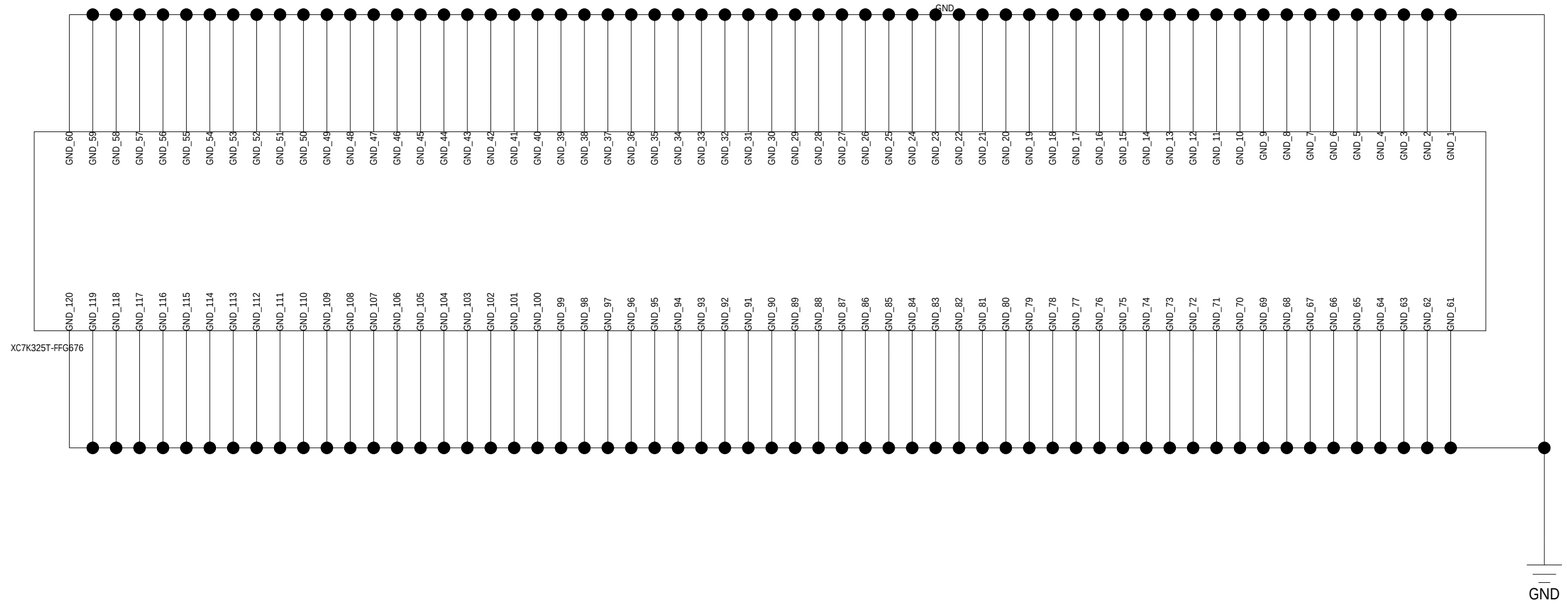

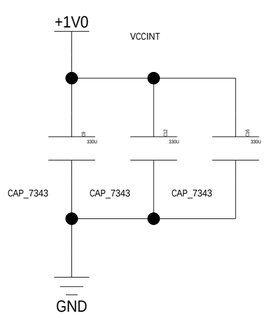

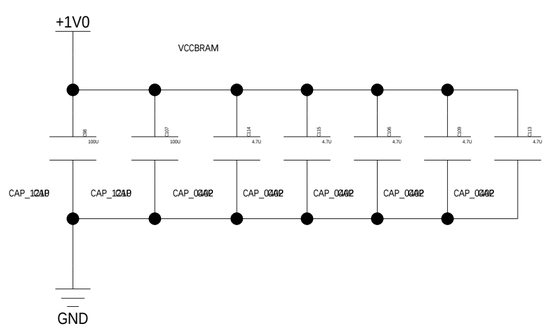

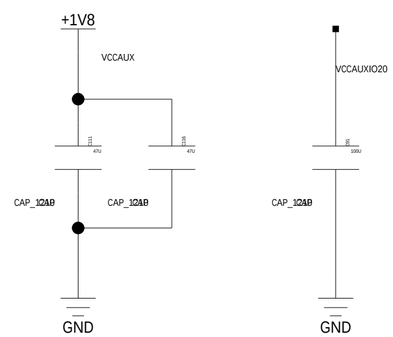

BANK PW, GND

CONTRACT NO.					
APPROVALS	DATE				
DRAWN					
CHECKED		SIZE	FSCM NO.	DWG. NO.	REV
ISSUED		C			
		SCALE		SHEET	

DWG. NO.
SH.
REV

H=4ND; V=4LA

REVISIONS			
REV	DESCRIPTION	DATE	APPROVED

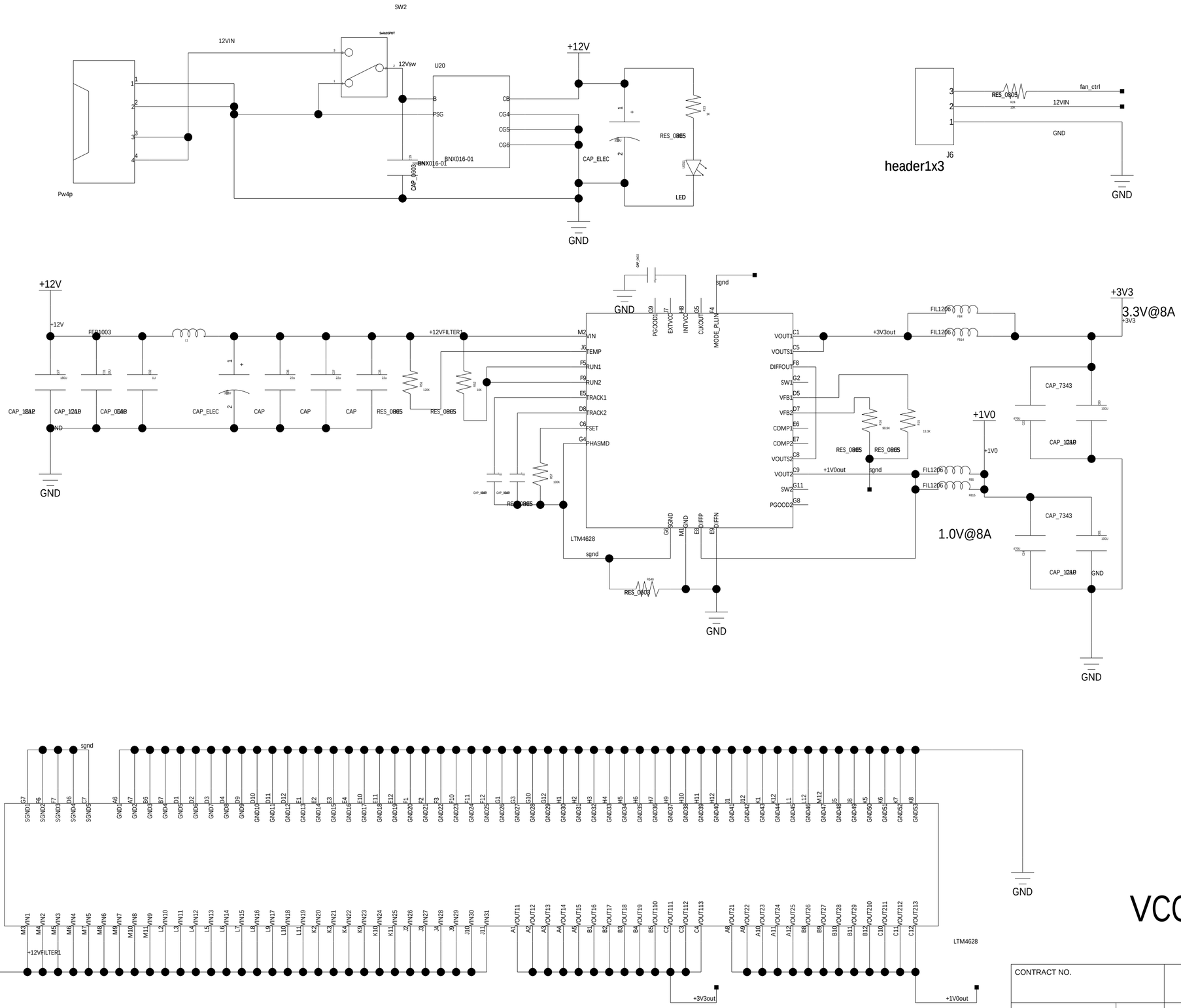

CONTRACT NO.					
APPROVALS	DATE				
DRAWN					
CHECKED		SIZE	FSCM NO.	DWG. NO.	REV
ISSUED		C			
		SCALE		SHEET	

H=4ND; V=4LA

REVISIONS			
REV	DESCRIPTION	DATE	APPROVED

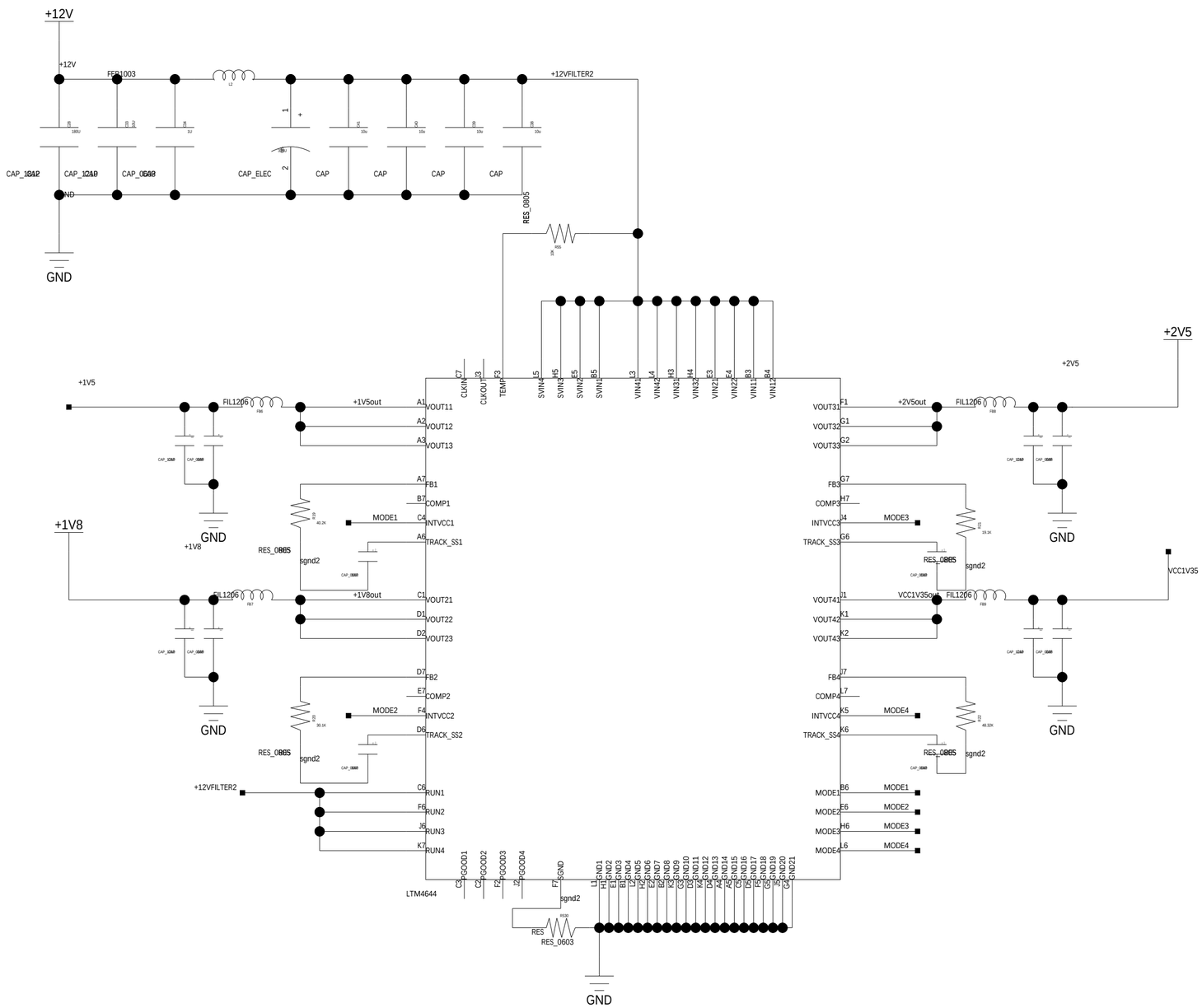

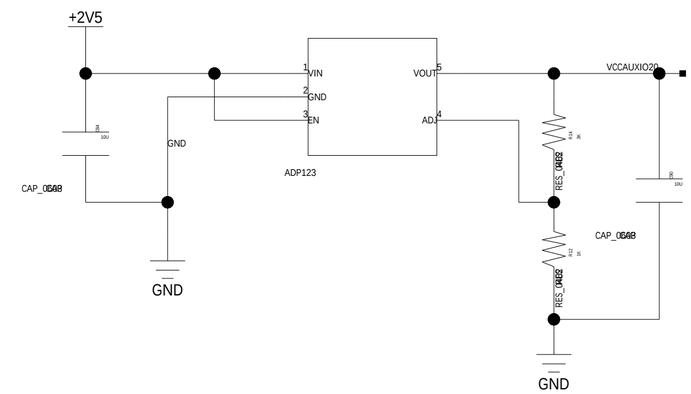

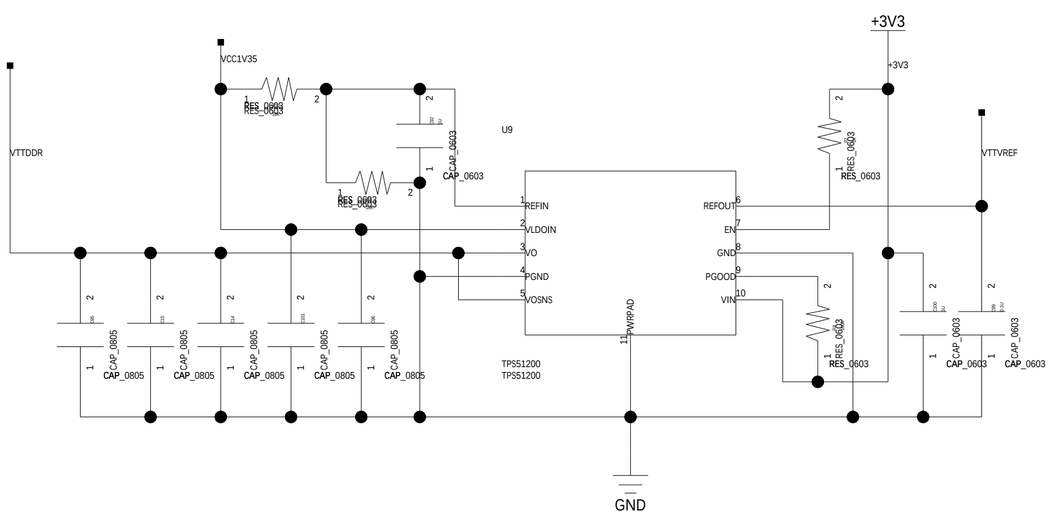

VCCO,DDR PW

CONTRACT NO.					
APPROVALS	DATE				
DRAWN					
CHECKED		SIZE	FSCM NO.	DWG. NO.	REV
ISSUED		C			
		SCALE		SHEET	

DWG. NO.
SH.
REV

H=4ND; V=4LA

REVISIONS			
REV	DESCRIPTION	DATE	APPROVED

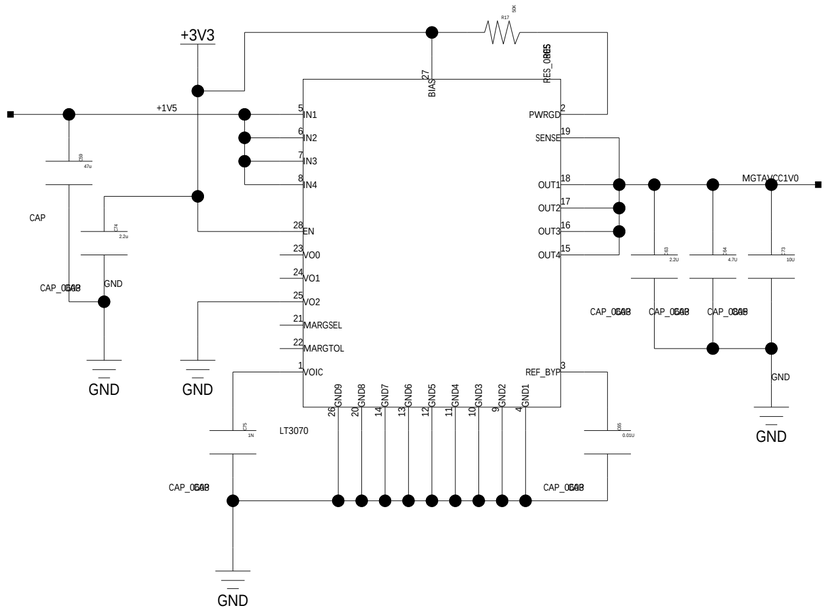

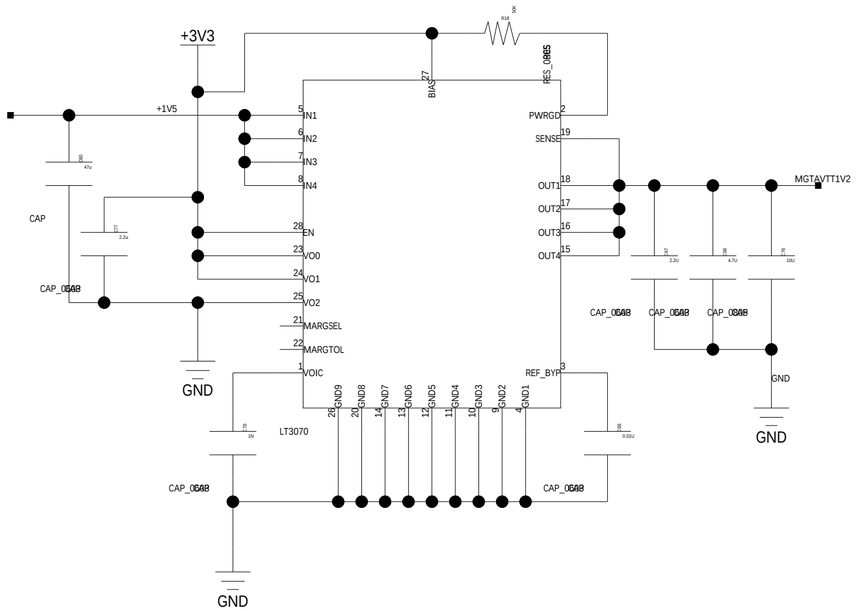

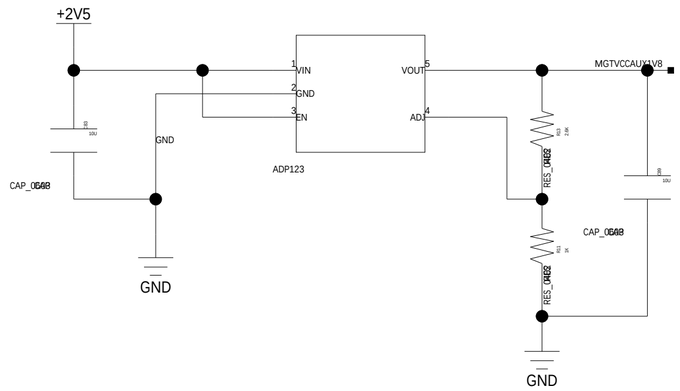

MGTPW

CONTRACT NO.					
APPROVALS	DATE				
DRAWN					
CHECKED		SIZE	FSCM NO.	DWG. NO.	REV
ISSUED		C			
		SCALE		SHEET	

DWG. NO.
SH.
REV

H=4ND; V=4LA