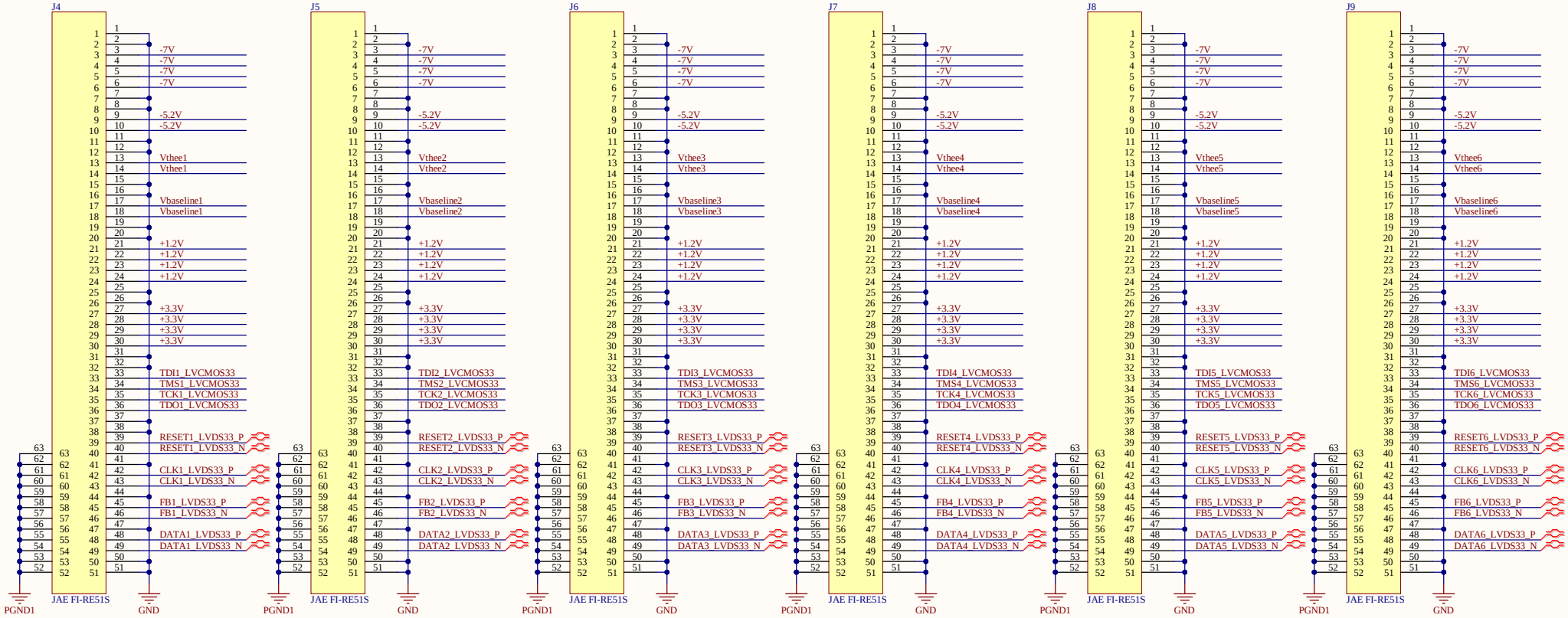

Title		
Size A3	Number	Revision
Date: 9-28-2025		Sheet of
File: E:\Yun\..\main.SchDoc		Drawn By:

Comment	Description	Designator	Footprint	LibRef	Quantity

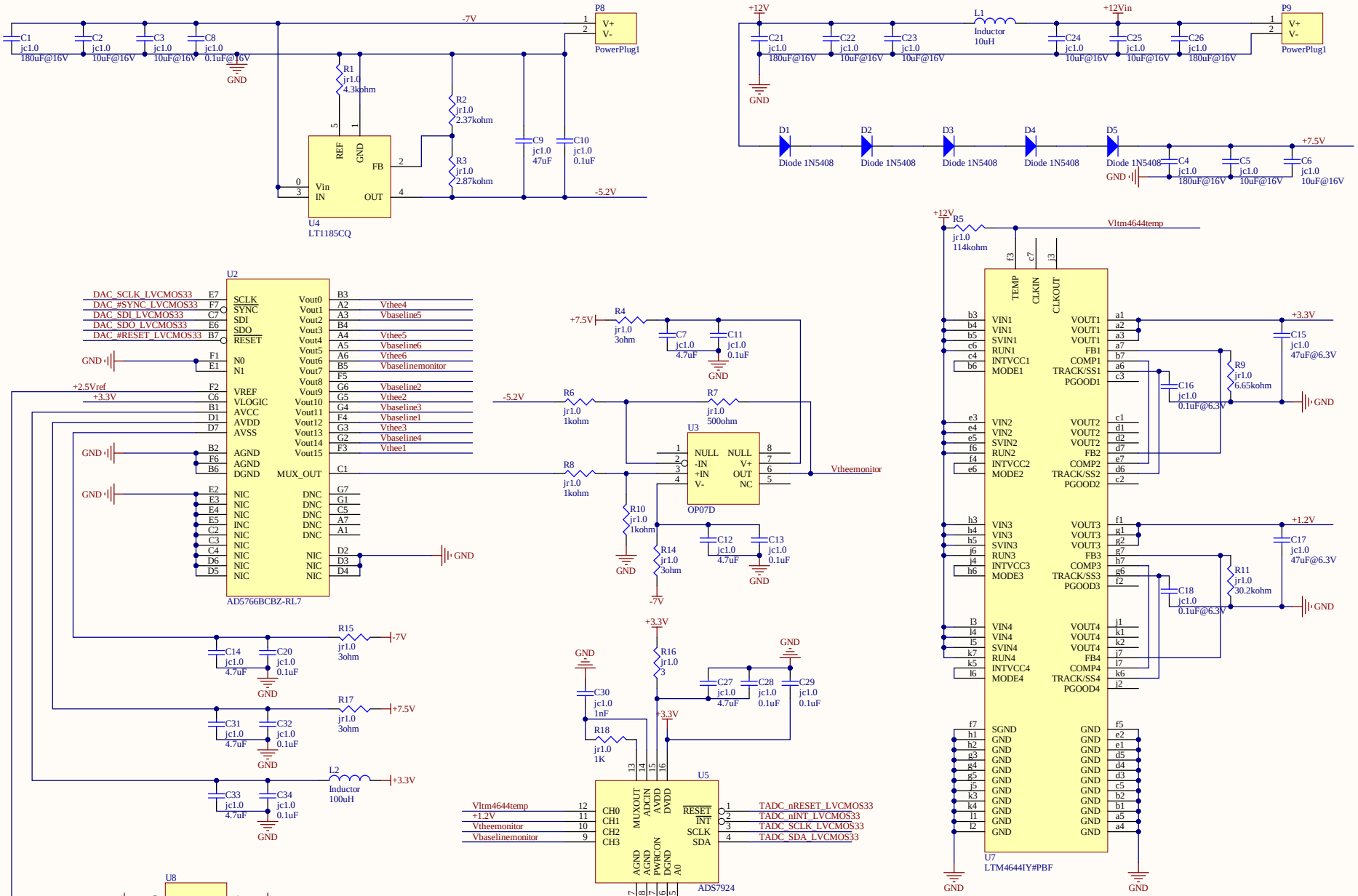

Title		
Size A3	Number	Revision
Date: 9-28-2025		Sheet of
File: E:\Yun\..\power.SchDoc		Drawn By:

Comment	Description	Designator	Footprint	LibRef	Quantity

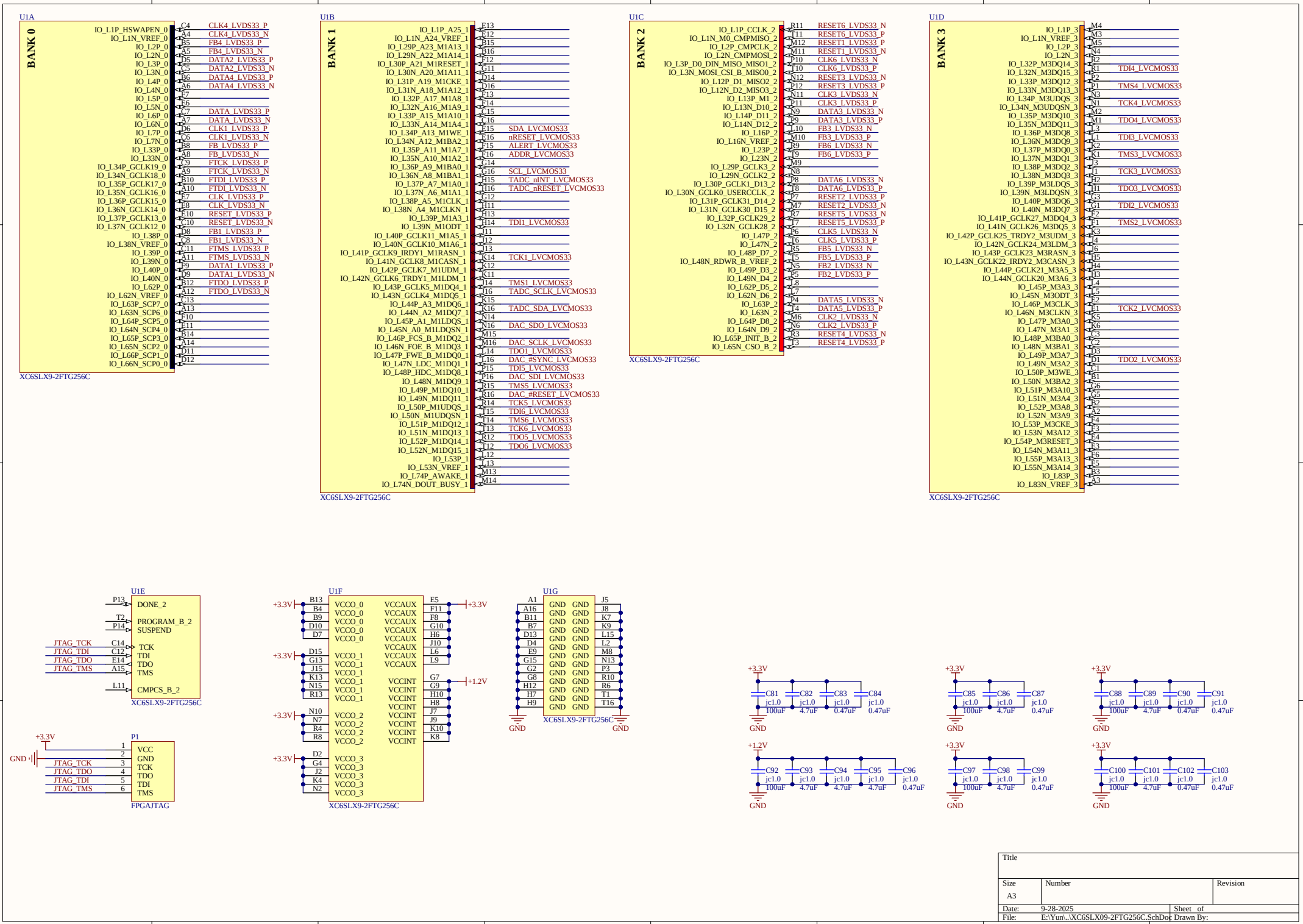
U1A
BANK 0
IO_L1P_HSWAPEN_0 C4 CLK4_LVDS33_P
IO_L1N_VREF_0 A4 CLK4_LVDS33_N
IO_L2P_0 B5 FB4_LVDS33_P
IO_L2N_0 A5 FB4_LVDS33_N
IO_L3P_0 D5 DATA2_LVDS33_P
IO_L3N_0 C5 DATA2_LVDS33_N
IO_L4P_0 B6 DATA4_LVDS33_P
IO_L4N_0 A6 DATA4_LVDS33_N
IO_L5P_0 F7
IO_L5N_0 E6
IO_L6P_0 C7 DATA_LVDS33_P
IO_L6N_0 A7 DATA_LVDS33_N
IO_L7P_0 D6 CLK1_LVDS33_P
IO_L7N_0 C6 CLK1_LVDS33_N
IO_L33P_0 B8 FB_LVDS33_P
IO_L33N_0 A8 FB_LVDS33_N
IO_L34P_GCLK19_0 C9 FTCK_LVDS33_P
IO_L34N_GCLK18_0 A9 FTCK_LVDS33_N
IO_L35P_GCLK17_0 B10 FTDI_LVDS33_P
IO_L35N_GCLK16_0 A10 FTDI_LVDS33_N
IO_L36P_GCLK15_0 E7 CLK_LVDS33_P
IO_L36N_GCLK14_0 E8 CLK_LVDS33_N
IO_L37P_GCLK13_0 E10 RESET_LVDS33_P
IO_L37N_GCLK12_0 C10 RESET_LVDS33_N
IO_L38P_0 D8 FB1_LVDS33_P
IO_L38N_VREF_0 C8 FB1_LVDS33_N
IO_L39P_0 C11 FTMS_LVDS33_P
IO_L39N_0 A11 FTMS_LVDS33_N
IO_L40P_0 F9 DATA1_LVDS33_P
IO_L40N_0 D9 DATA1_LVDS33_N
IO_L62P_0 B12 FTDO_LVDS33_P
IO_L62N_VREF_0 A12 FTDO_LVDS33_N
IO_L63P_SCP7_0 C13
IO_L63N_SCP6_0 A13
IO_L64P_SCP5_0 F10
IO_L64N_SCP4_0 E11
IO_L65P_SCP3_0 B14
IO_L65N_SCP2_0 A14
IO_L66P_SCP1_0 D11
IO_L66N_SCP0_0 D12
XC6SLX9-2FTG256C
U1B
BANK 1
IO_L1P_A25_1 E13
IO_L1N_A24_VREF_1 E12
IO_L29P_A23_M1A13_1 B15
IO_L29N_A22_M1A14_1 B16
IO_L30P_A21_M1RESET_1 F12
IO_L30N_A20_M1A11_1 G11
IO_L31P_A19_M1CKE_1 D14
IO_L31N_A18_M1A12_1 D16
IO_L32P_A17_M1A8_1 F13
IO_L32N_A16_M1A9_1 F14
IO_L33P_A15_M1A10_1 G15
IO_L33N_A14_M1A4_1 G16
IO_L34P_A13_M1WE_1 E15 SDA_LVCMOS33
IO_L34N_A12_M1BA2_1 E16 nRESET_LVCMOS33
IO_L35P_A11_M1A7_1 F15 ALERT_LVCMOS33
IO_L35N_A10_M1A2_1 F16 ADDR_LVCMOS33
IO_L36P_A9_M1BA0_1 G14
IO_L36N_A8_M1BA1_1 G16 SCL_LVCMOS33
IO_L37P_A7_M1A0_1 H15 TADC_nINT_LVCMOS33
IO_L37N_A6_M1A1_1 H16 TADC_nRESET_LVCMOS33
IO_L38P_A5_M1CLK_1 G12
IO_L38N_A4_M1CLKN_1 H11
IO_L39P_M1A3_1 H13
IO_L39N_M1ODT_1 H14 TDI1_LVCMOS33
IO_L40P_GCLK11_M1A5_1 J11
IO_L40N_GCLK10_M1A6_1 J12
IO_L41P_GCLK9_IRDY1_M1RASN_1 J13
IO_L41N_GCLK8_M1CASN_1 K14 TCK1_LVCMOS33
IO_L42P_GCLK7_M1UDM_1 K12
IO_L42N_GCLK6_TRDY1_M1LDM_1 K11
IO_L43P_GCLK5_M1DQ4_1 J14 TMS1_LVCMOS33
IO_L43N_GCLK4_M1DQ5_1 J16 TADC_SCLK_LVCMOS33
IO_L44P_A3_M1DQ6_1 K15
IO_L44N_A2_M1DQ7_1 K16 TADC_SDA_LVCMOS33
IO_L45P_A1_M1LDQS_1 N14
IO_L45N_A0_M1LDQSN_1 N16 DAC_SDO_LVCMOS33
IO_L46P_FCS_B_M1DQ2_1 M15
IO_L46N_FOE_B_M1DQ3_1 M16 DAC_SCLK_LVCMOS33
IO_L47P_FWE_B_M1DQ0_1 L14 TDO1_LVCMOS33
IO_L47N_LDC_M1DQ1_1 L16 DAC_#SYNC_LVCMOS33
IO_L48P_HDC_M1DQ8_1 P15 TDI5_LVCMOS33
IO_L48N_M1DQ9_1 P16 DAC_SDI_LVCMOS33
IO_L49P_M1DQ10_1 R15 TMS5_LVCMOS33
IO_L49N_M1DQ11_1 R16 DAC_#RESET_LVCMOS33
IO_L50P_M1UDQS_1 R14 TCK5_LVCMOS33
IO_L50N_M1UDQSN_1 T15 TDI6_LVCMOS33
IO_L51P_M1DQ12_1 T14 TMS6_LVCMOS33
IO_L51N_M1DQ13_1 T13 TCK6_LVCMOS33
IO_L52P_M1DQ14_1 R12 TDO5_LVCMOS33
IO_L52N_M1DQ15_1 T12 TDO6_LVCMOS33
IO_L53P_1 T12
IO_L53N_VREF_1 T13
IO_L74P_AWAKE_1 M13
IO_L74N_DOUT_BUSY_1 M14
XC6SLX9-2FTG256C
U1C
BANK 2
IO_L1P_CCLK_2 R11 RESET6_LVDS33_N
IO_L1N_M0_CMPMISO_2 T11 RESET6_LVDS33_P
IO_L2P_CMPCLK_2 M12 RESET1_LVDS33_P
IO_L2N_CMPMOSI_2 M11 RESET1_LVDS33_N
IO_L3P_D0_DIN_MISO_MISO1_2 P10 CLK6_LVDS33_N
IO_L3N_MOSI_CSI_B_MISO0_2 T10 CLK6_LVDS33_P
IO_L12P_D1_MISO2_2 N12 RESET3_LVDS33_N
IO_L12N_D2_MISO3_2 P12 RESET3_LVDS33_P
IO_L13P_M1_2 N11 CLK3_LVDS33_N
IO_L13N_D10_2 P11 CLK3_LVDS33_P
IO_L14P_D11_2 N9 DATA3_LVDS33_N
IO_L14N_D12_2 P9 DATA3_LVDS33_P
IO_L16P_2 T10 FB3_LVDS33_N
IO_L16N_VREF_2 M10 FB3_LVDS33_P
IO_L23P_2 R9 FB6_LVDS33_N
IO_L23N_2 T9 FB6_LVDS33_P
IO_L29P_GCLK3_2 M9
IO_L29N_GCLK2_2 N8
IO_L30P_GCLK1_D13_2 P8 DATA6_LVDS33_N
IO_L30N_GCLK0_USERCCLK_2 T8 DATA6_LVDS33_P
IO_L31P_GCLK31_D14_2 R7 RESET2_LVDS33_P
IO_L31N_GCLK30_D15_2 M7 RESET2_LVDS33_N
IO_L32P_GCLK29_2 R7 RESET5_LVDS33_N
IO_L32N_GCLK28_2 T7 RESET5_LVDS33_P
IO_L47P_2 P6 CLK5_LVDS33_N
IO_L47N_2 T6 CLK5_LVDS33_P
IO_L48P_D7_2 R5 FB5_LVDS33_N
IO_L48N_RDWR_B_VREF_2 T5 FB5_LVDS33_P
IO_L49P_D3_2 N5 FB2_LVDS33_N
IO_L49N_D4_2 P5 FB2_LVDS33_P
IO_L62P_D5_2 T8
IO_L62N_D6_2 T7
IO_L63P_2 R4 DATA5_LVDS33_N
IO_L63N_2 T4 DATA5_LVDS33_P
IO_L64P_D8_2 M6 CLK2_LVDS33_N
IO_L64N_D9_2 N6 CLK2_LVDS33_P
IO_L65P_INIT_B_2 R3 RESET4_LVDS33_N
IO_L65N_CSO_B_2 T3 RESET4_LVDS33_P
XC6SLX9-2FTG256C
U1D
BANK 3
IO_L1P_3 M4
IO_L1N_VREF_3 M3
IO_L2P_3 M5
IO_L2N_3 N4
IO_L32P_M3DQ14_3 R2
IO_L32N_M3DQ15_3 R1 TDI4_LVCMOS33
IO_L33P_M3DQ12_3 P2
IO_L33N_M3DQ13_3 P1 TMS4_LVCMOS33
IO_L34P_M3UDQS_3 N3
IO_L34N_M3UDQSN_3 N1 TCK4_LVCMOS33
IO_L35P_M3DQ10_3 M2
IO_L35N_M3DQ11_3 M1 TDO4_LVCMOS33
IO_L36P_M3DQ8_3 L3
IO_L36N_M3DQ9_3 L1 TDI3_LVCMOS33
IO_L37P_M3DQ0_3 K2
IO_L37N_M3DQ1_3 K1 TMS3_LVCMOS33
IO_L38P_M3DQ2_3 J3
IO_L38N_M3DQ3_3 J1 TCK3_LVCMOS33
IO_L39P_M3LDQS_3 H2
IO_L39N_M3LDQSN_3 H1 TDO3_LVCMOS33
IO_L40P_M3DQ6_3 G3
IO_L40N_M3DQ7_3 G1 TDI2_LVCMOS33
IO_L41P_GCLK27_M3DQ4_3 F2
IO_L41N_GCLK26_M3DQ5_3 F1 TMS2_LVCMOS33
IO_L42P_GCLK25_TRDY2_M3UDM_3 K3
IO_L42N_GCLK24_M3LDM_3 J4
IO_L43P_GCLK23_M3RASN_3 H6
IO_L43N_GCLK22_IRDY2_M3CASN_3 H5
IO_L44P_GCLK21_M3A5_3 H4
IO_L44N_GCLK20_M3A6_3 H3
IO_L45P_M3A3_3 L4
IO_L45N_M3ODT_3 L5
IO_L46P_M3CLK_3 E2
IO_L46N_M3CLKN_3 E1 TCK2_LVCMOS33
IO_L47P_M3A0_3 K5
IO_L47N_M3A1_3 K6
IO_L48P_M3BA0_3 C3
IO_L48N_M3BA1_3 C2
IO_L49P_M3A7_3 D3
IO_L49N_M3A2_3 D1 TDO2_LVCMOS33
IO_L50P_M3WE_3 C1
IO_L50N_M3BA2_3 B1
IO_L51P_M3A10_3 G6
IO_L51N_M3A4_3 G5
IO_L52P_M3A8_3 B2
IO_L52N_M3A9_3 A2
IO_L53P_M3CKE_3 F4
IO_L53N_M3A12_3 F3
IO_L54P_M3RESET_3 E4
IO_L54N_M3A11_3 E3
IO_L55P_M3A13_3 F6
IO_L55N_M3A14_3 F5
IO_L83P_3 B3
IO_L83N_VREF_3 A3
XC6SLX9-2FTG256C
U1E
P13 DONE_2
T2 PROGRAM_B_2
P14 SUSPEND
JTAG_TCK C14 TCK
JTAG_TDI C12 TDI
JTAG_TDO E14 TDO
JTAG_TMS A15 TMS
L11 CMPCS_B_2
XC6SLX9-2FTG256C
U1F
+3.3V B13 VCCO_0 VCCAUX E5 +3.3V
B4 VCCO_0 VCCAUX F11
B9 VCCO_0 VCCAUX F8
D10 VCCO_0 VCCAUX G10
D7 VCCO_0 VCCAUX H6
VCCAUX J10
VCCAUX L6
+3.3V D15 VCCO_1 VCCAUX L9
G13 VCCO_1
J15 VCCO_1
K13 VCCO_1
N15 VCCO_1 VCCINT G7 +1.2V
R13 VCCO_1 VCCINT G9
VCCO_1 VCCINT H10
VCCINT H8
+3.3V N10 VCCO_2 VCCINT J7
N7 VCCO_2 VCCINT J9
R4 VCCO_2 VCCINT K10
R8 VCCO_2 VCCINT K8
+3.3V D2 VCCO_3
G4 VCCO_3
J2 VCCO_3
K4 VCCO_3
N2 VCCO_3
XC6SLX9-2FTG256C
U1G
A1 GND GND J5
A16 GND GND J8
B11 GND GND K7
B7 GND GND K9
D13 GND GND L15
D4 GND GND L2
E9 GND GND M8
G15 GND GND N13
G2 GND GND P3
G8 GND GND R10
H12 GND GND R6
H7 GND GND T1
H9 GND GND T16
GND GND
XC6SLX9-2FTG256C
P1
+3.3V
GND
1 VCC
2 GND
JTAG_TCK 3 TCK
JTAG_TDO 4 TDO
JTAG_TDI 5 TDI
JTAG_TMS 6 TMS
FPGAJTAG
+3.3V C81 C82 C83 C84
jc1.0 jc1.0 jc1.0 jc1.0
100uF 4.7uF 0.47uF 0.47uF
GND
+3.3V C85 C86 C87
jc1.0 jc1.0 jc1.0
100uF 4.7uF 0.47uF
GND
+3.3V C88 C89 C90 C91
jc1.0 jc1.0 jc1.0 jc1.0
100uF 4.7uF 0.47uF 0.47uF
GND
+1.2V C92 C93 C94 C95 C96
jc1.0 jc1.0 jc1.0 jc1.0 jc1.0
100uF 4.7uF 4.7uF 4.7uF 0.47uF
GND
+3.3V C97 C98 C99
jc1.0 jc1.0 jc1.0
100uF 4.7uF 0.47uF
GND
+3.3V C100 C101 C102 C103
jc1.0 jc1.0 jc1.0 jc1.0
100uF 4.7uF 0.47uF 0.47uF
GND
Title
Size A3
Number
Revision
Date: 9-28-2025
Sheet of
File: E:\Yun\..\XC6SLX09-2FTG256C.SchDoc
Drawn By:

Comment	Description	Designator	Footprint	LibRef	Quantity