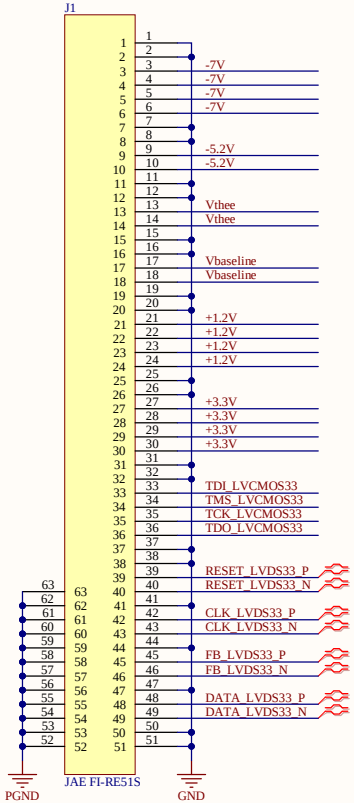

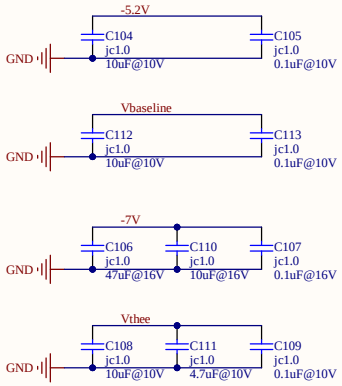

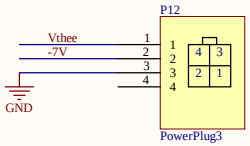

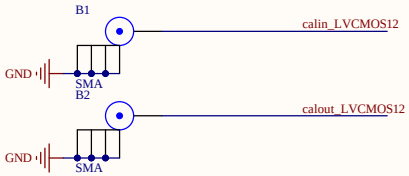

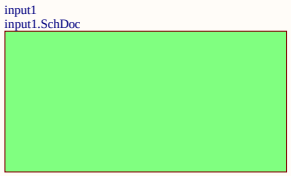

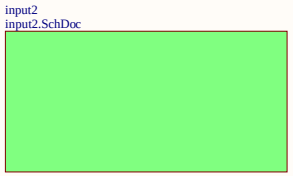

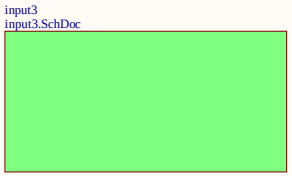

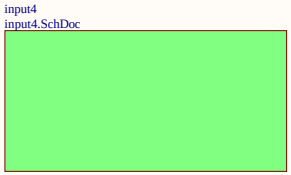

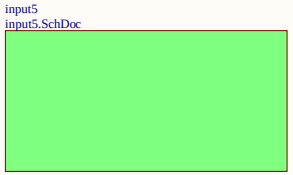

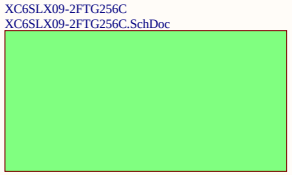

Title		
Size A3	Number	Revision
Date: 9-28-2025		Sheet of
File: E:\Yun\..\main.SchDoc		Drawn By:

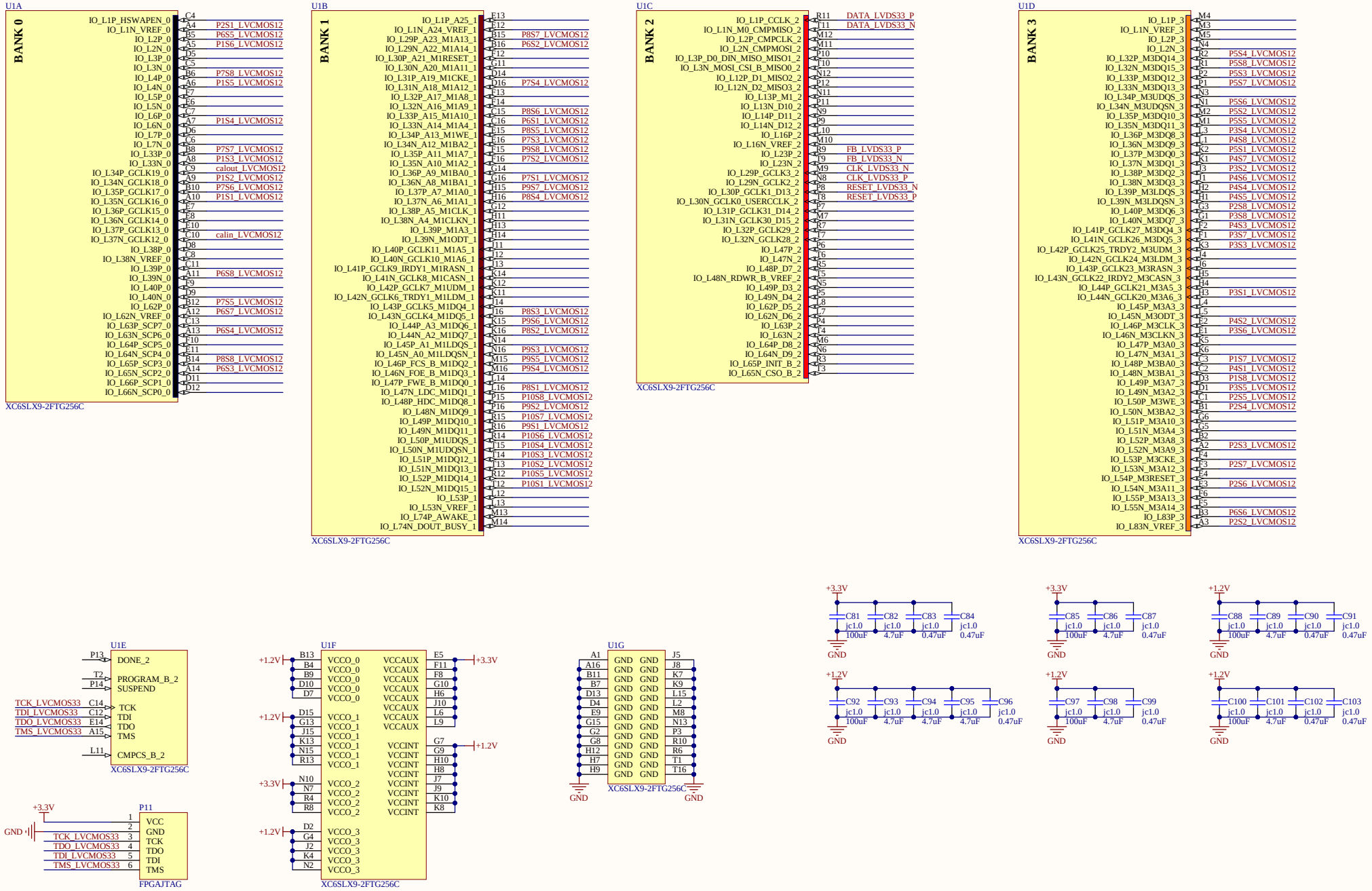

Title		
Size A3	Number	Revision
Date: 9-28-2025	Sheet of	
File: E:\Yun\..\XC6SLX09-2FTG256C.SchDoc	Drawn By:	

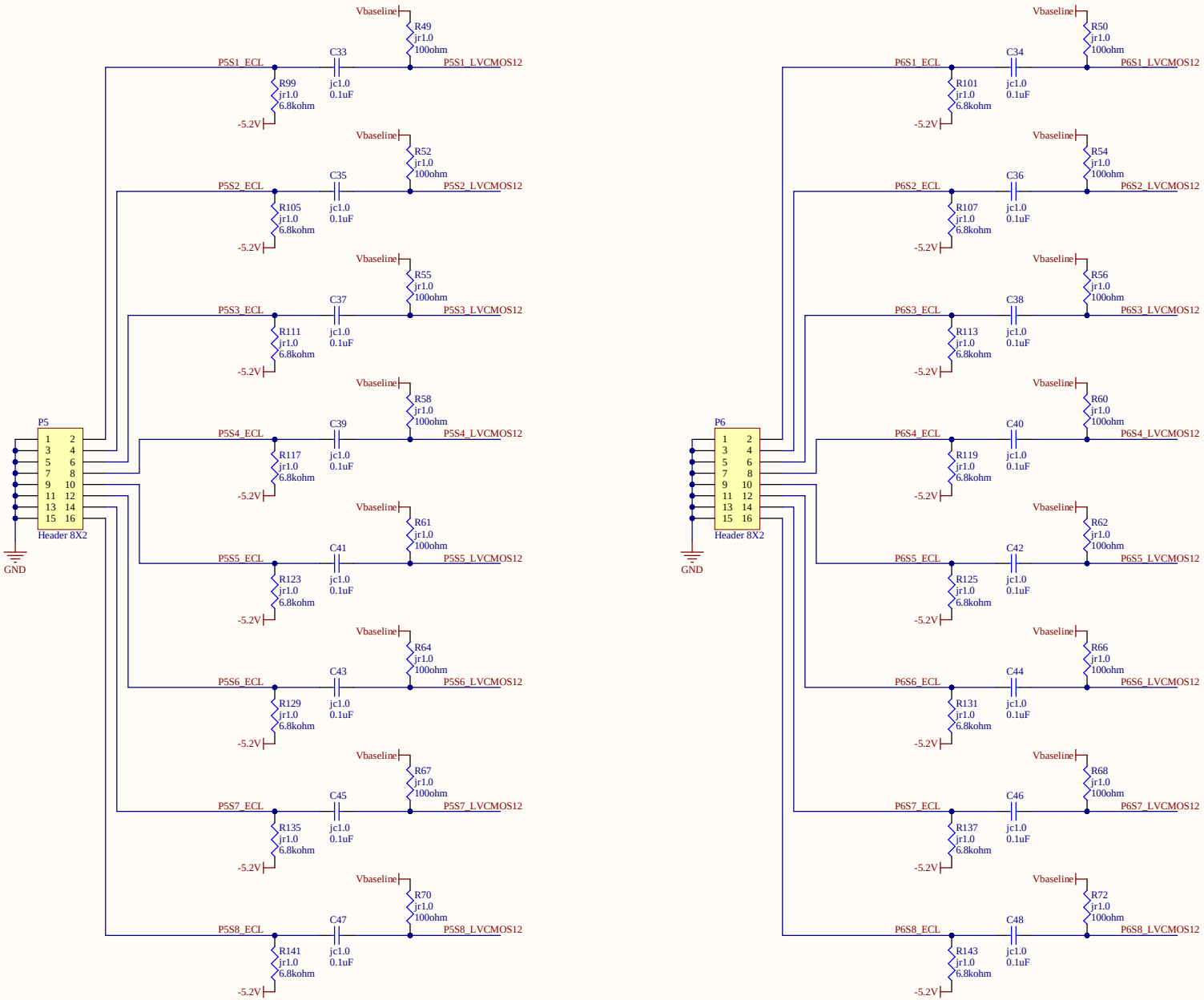

Title		
Size A3	Number	Revision
Date: 9-28-2025		Sheet of
File: E:\Yun\..\input3.SchDoc		Drawn By:

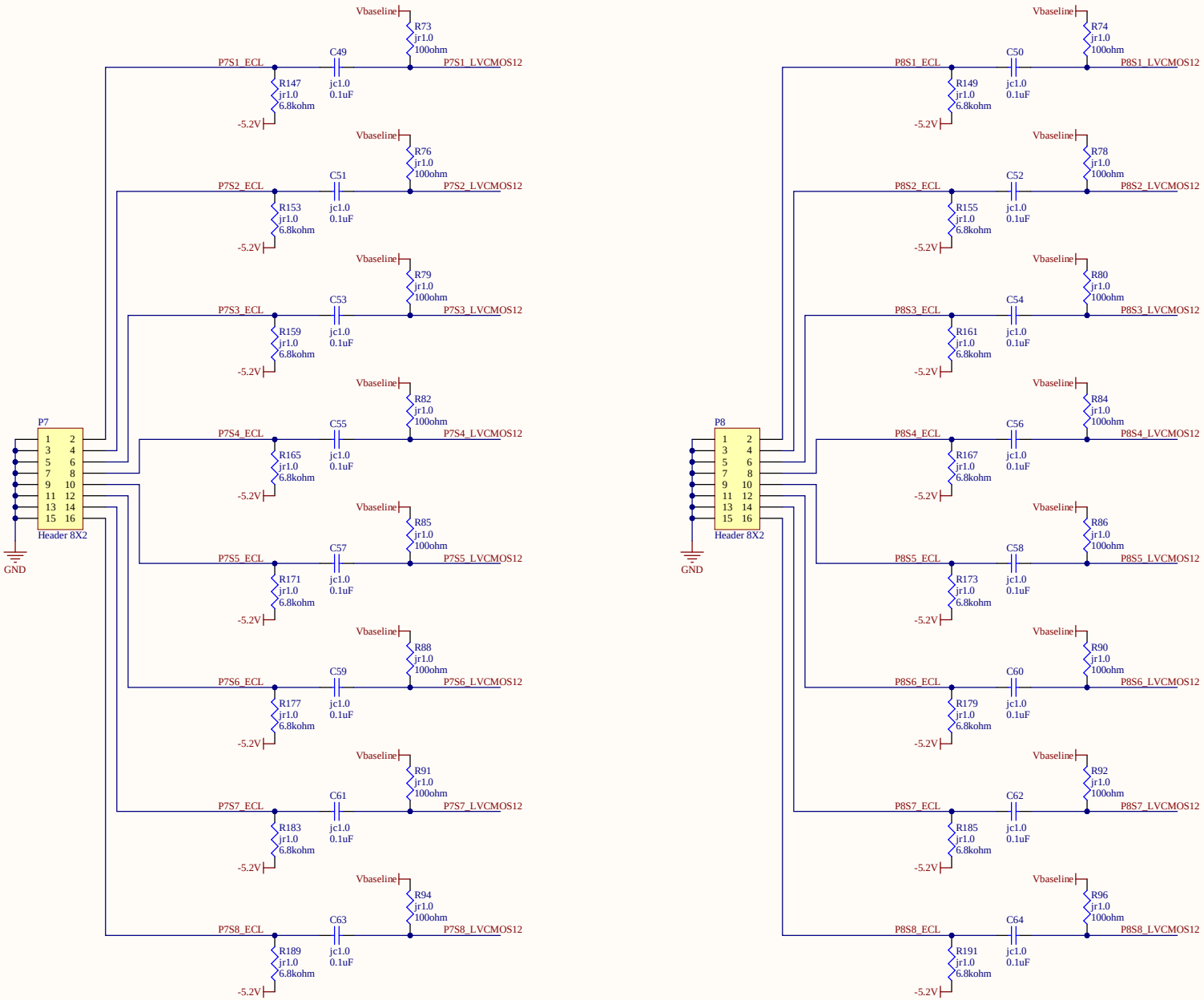

Title		
Size A3	Number	Revision
Date: 9-28-2025		Sheet of
File: E:\Yun\..\input4.SchDoc		Drawn By:

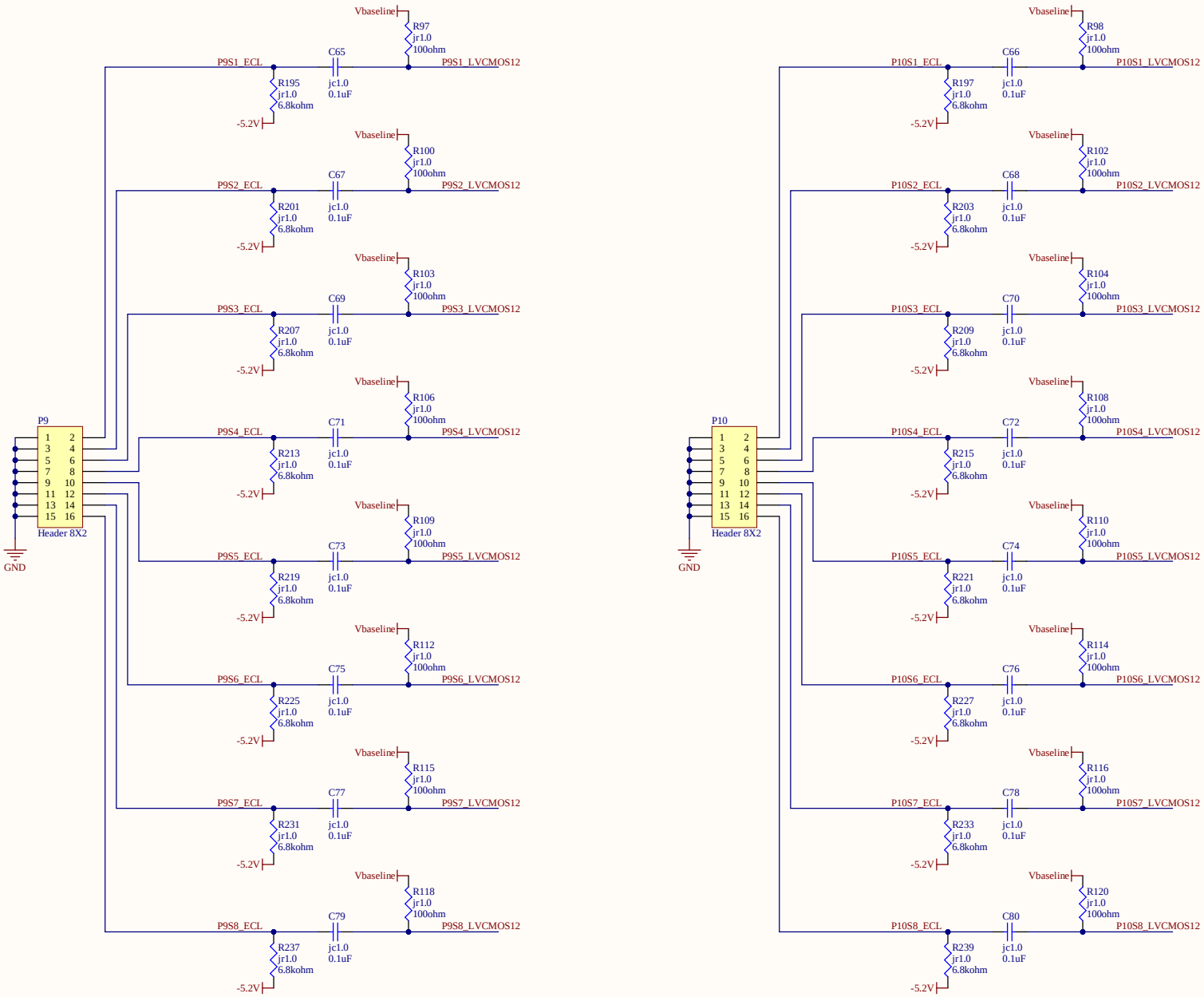

Title		
Size A3	Number	Revision
Date: 9-28-2025		Sheet of
File: E:\Yun\..\input5.SchDoc		Drawn By:

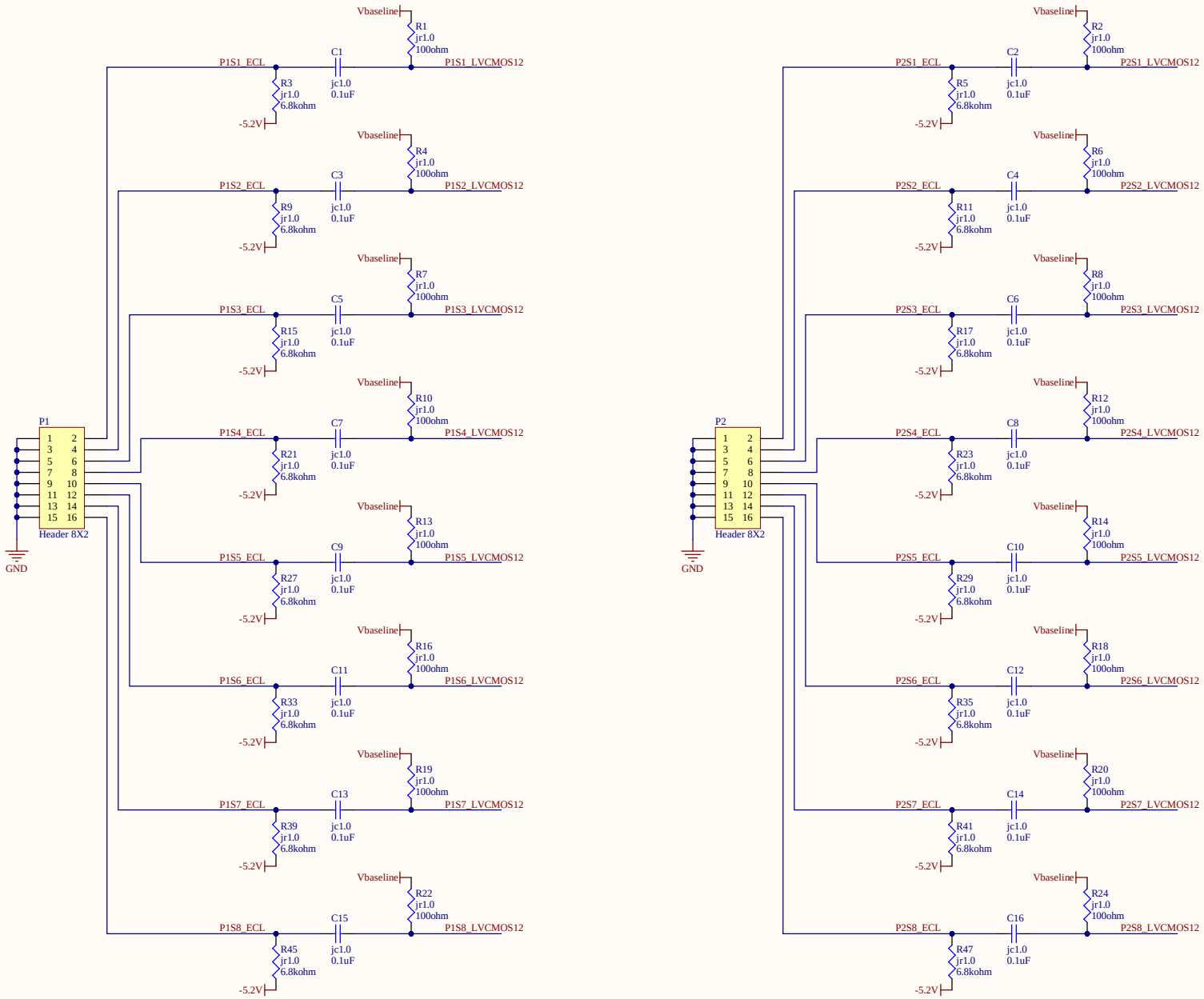

Title		
Size A3	Number	Revision
Date: 9-28-2025		Sheet of
File: E:\Yun\..\input1.SchDoc		Drawn By:

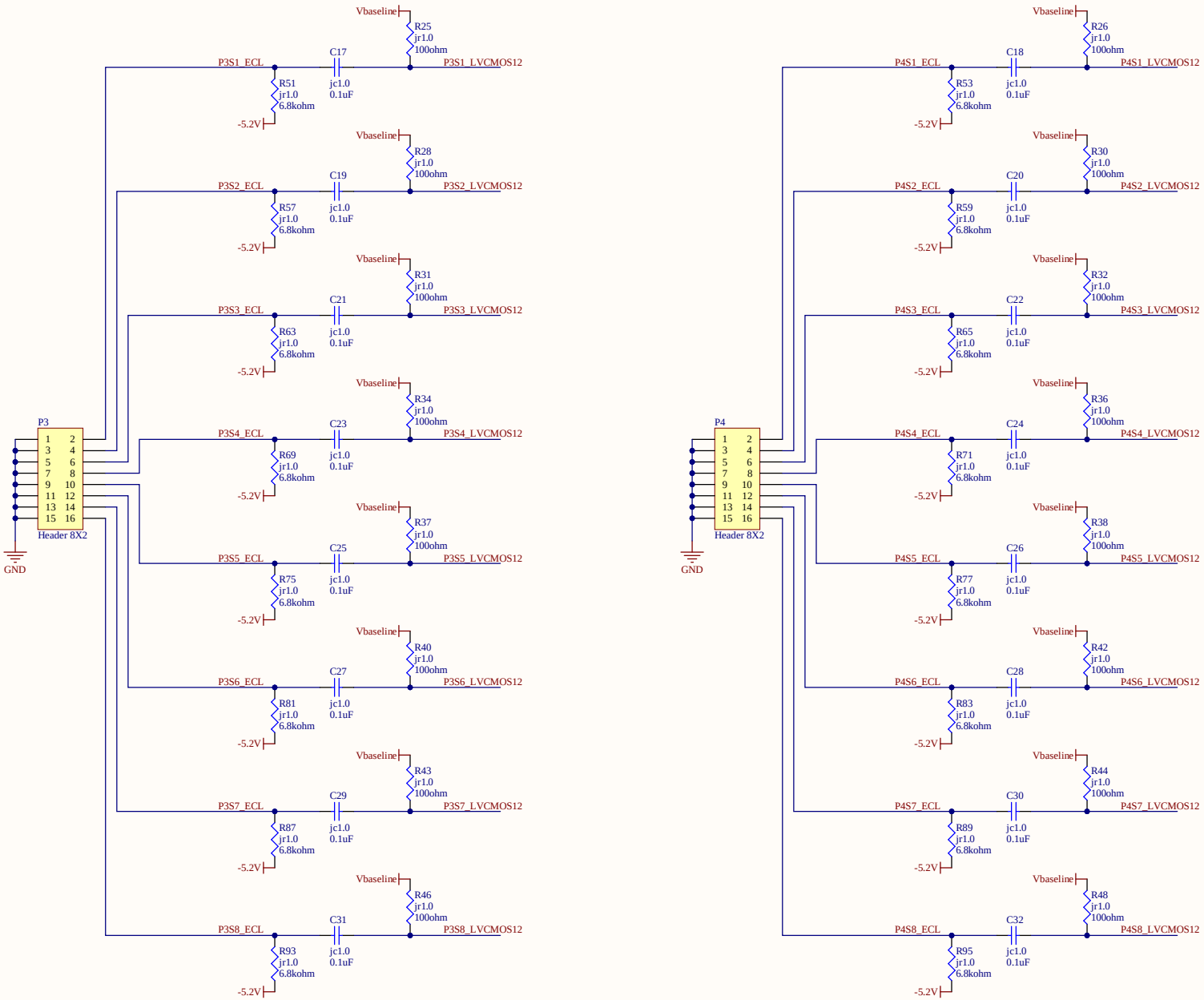

Title		
Size A3	Number	Revision
Date: 9-28-2025		Sheet of
File: E:\Yun\..\input2.SchDoc		Drawn By: