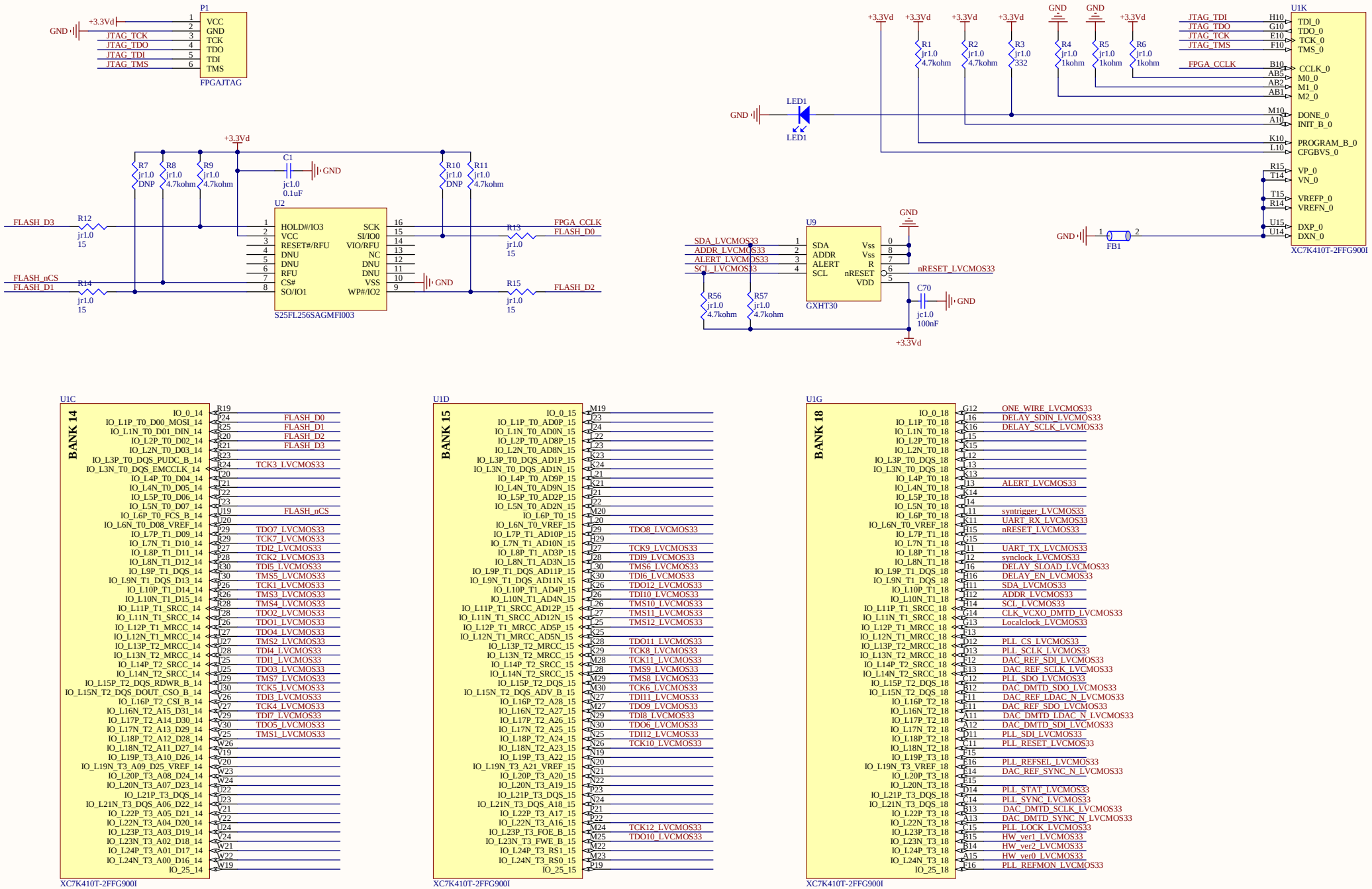
P1
FPGAJTAG
VCC
GND
TCK
TDO
TDI
TMS
JTAG_TCK
JTAG_TDO
JTAG_TDI
JTAG_TMS
+3.3Vd
GND
U2
S25FL256SAGMFI003
HOLD#/IO3
VCC
RESET#/RFU
DNU
DNU
RFU
CS#
SO/IO1
SCK
SI/IO0
VIO/RFU
NC
DNU
DNU
VSS
WP#/IO2
FLASH_D3
FLASH_nCS
FLASH_D1
FPGA_CCLK
FLASH_D0
FLASH_D2
R7 jr1.0 DNP
R8 jr1.0 4.7kohm
R9 jr1.0 4.7kohm
R10 jr1.0 DNP
R11 jr1.0 4.7kohm
R12 jr1.0 15
R13 jr1.0 15
R14 jr1.0 15
R15 jr1.0 15
C1 jc1.0 0.1uF
U1K
XC7K410T-2FFG900I
TDI_0
TDO_0
TCK_0
TMS_0
CCLK_0
M0_0
M1_0
M2_0
DONE_0
INIT_B_0
PROGRAM_B_0
CFGBVS_0
VP_0
VN_0
VREFP_0
VREFN_0
DXP_0
DXN_0
LED1
R1 jr1.0 4.7kohm
R2 jr1.0 4.7kohm
R3 jr1.0 332
R4 jr1.0 1kohm
R5 jr1.0 1kohm
R6 jr1.0 1kohm
FB1
U9
GXHT30
SDA
ADDR
ALERT
SCL
Vss
Vss
R
nRESET
VDD
SDA_LVCMOS33
ADDR_LVCMOS33
ALERT_LVCMOS33
SCL_LVCMOS33
nRESET_LVCMOS33
R56 jr1.0 4.7kohm
R57 jr1.0 4.7kohm
C70 jc1.0 100nF
U1C
BANK 14
XC7K410T-2FFG900I
U1D
BANK 15
XC7K410T-2FFG900I
U1G
BANK 18
XC7K410T-2FFG900I
ONE_WIRE_LVCMOS33
DELAY_SDIN_LVCMOS33
DELAY_SCLK_LVCMOS33
ALERT_LVCMOS33
syntrigger_LVCMOS33
UART_RX_LVCMOS33
nRESET_LVCMOS33
UART_TX_LVCMOS33
synclock_LVCMOS33
DELAY_SLOAD_LVCMOS33
DELAY_EN_LVCMOS33
SDA_LVCMOS33
ADDR_LVCMOS33
SCL_LVCMOS33
CLK_VCXO_DMTD_LVCMOS33
Localclock_LVCMOS33
PLL_CS_LVCMOS33
PLL_SCLK_LVCMOS33
DAC_REF_SDI_LVCMOS33
DAC_REF_SCLK_LVCMOS33
PLL_SDO_LVCMOS33
DAC_DMTD_SDO_LVCMOS33
DAC_REF_LDAC_N_LVCMOS33
DAC_REF_SDO_LVCMOS33
DAC_DMTD_LDAC_N_LVCMOS33
DAC_DMTD_SDI_LVCMOS33
PLL_SDI_LVCMOS33
PLL_RESET_LVCMOS33
PLL_REFSEL_LVCMOS33
DAC_REF_SYNC_N_LVCMOS33
PLL_STAT_LVCMOS33
PLL_SYNC_LVCMOS33
DAC_DMTD_SCLK_LVCMOS33
DAC_DMTD_SYNC_N_LVCMOS33
PLL_LOCK_LVCMOS33
HW_ver1_LVCMOS33
HW_ver2_LVCMOS33
HW_ver0_LVCMOS33
PLL_REFMON_LVCMOS33
Title
Size
A3
Number
Revision
Date: 9-09-2025
Sheet of
File: E:\Yun\..\K7410tFFG900Aux.SchDoc
Drawn By: