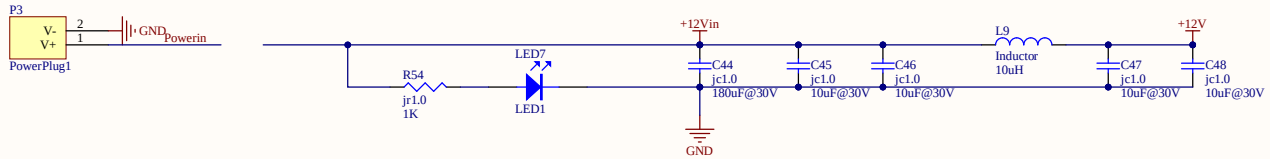

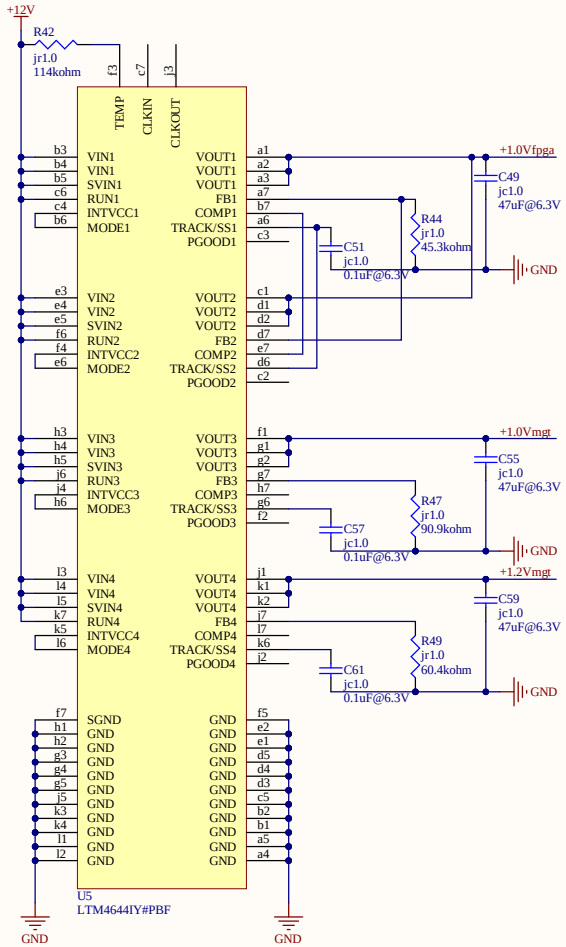

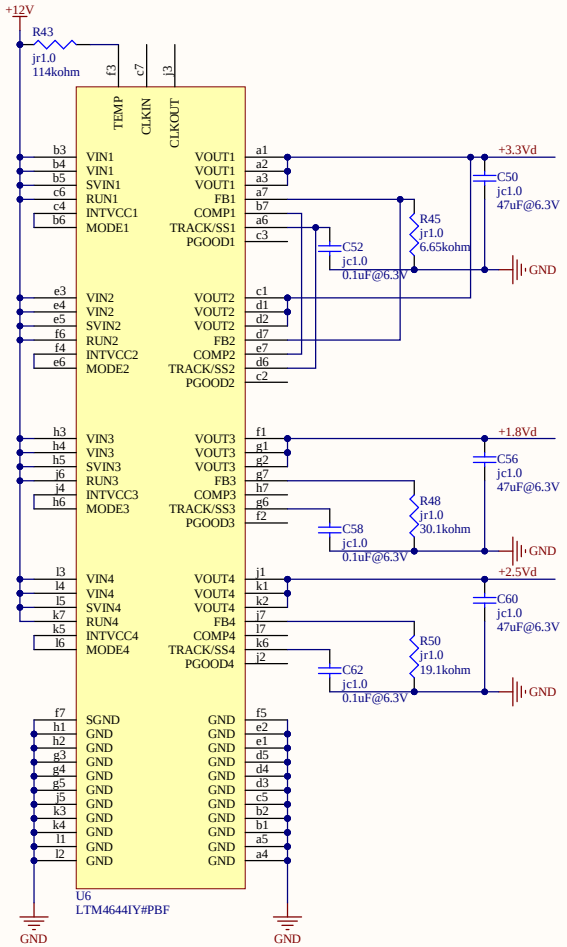

Title		
Size A3	Number	Revision
Date: 9-09-2025		Sheet of
File: E:\Yun\..\power.SchDoc		Drawn By: