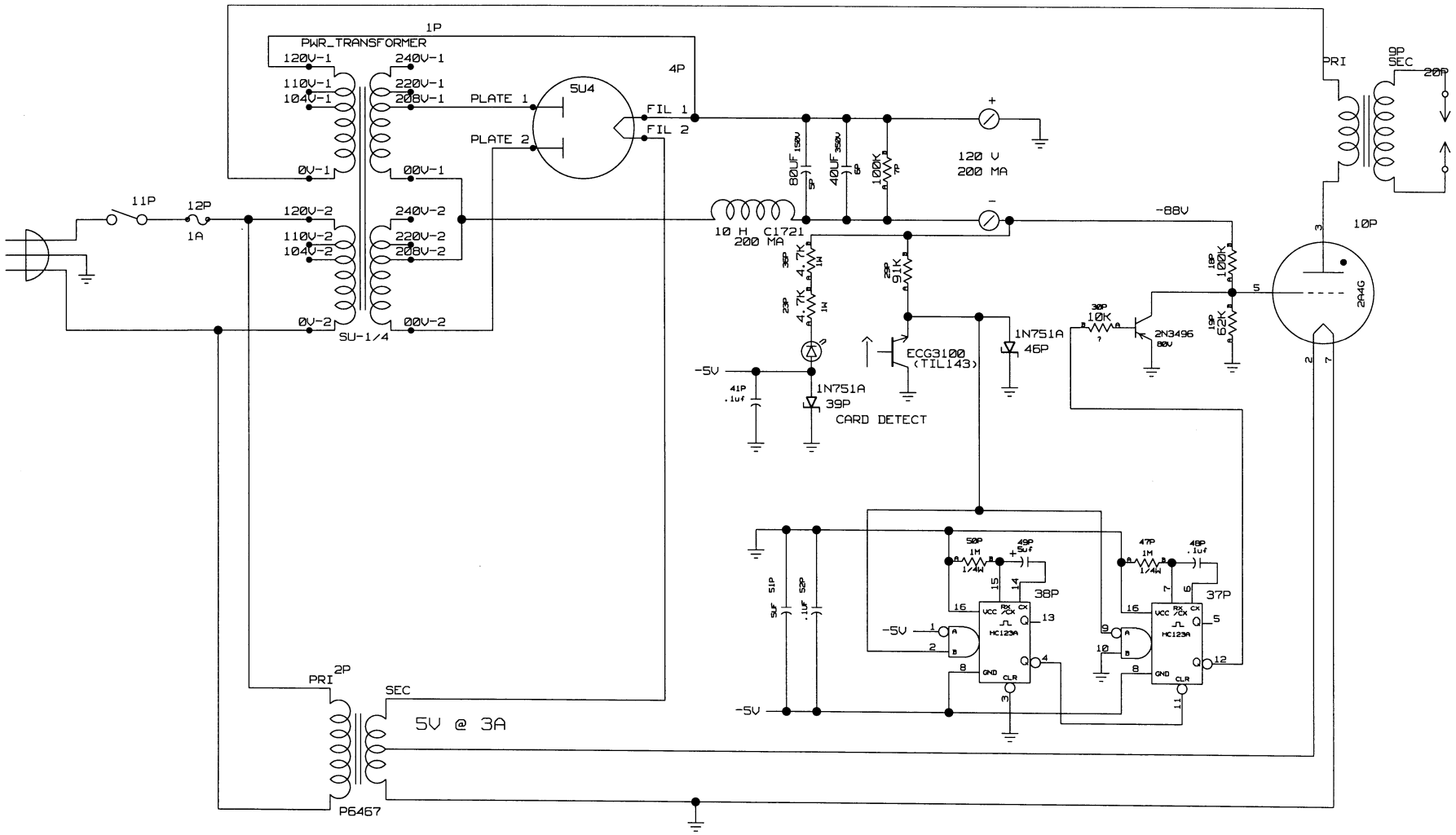

REQUESTOR	JOB ORDER	DESIGNED BY GARY SLEEGE	AMES LABORATORY IOWA STATE UNIVERSITY AMES, IOWA 50011	TITLE ABC PUNCH DISPLAY (AS BUILT)
GROUP LEADER	DATE AUGUST 13, 1999	LAYOUT BY		FILE NO 22521 / REVISION
				APPROVED BY / VERIFIED BY

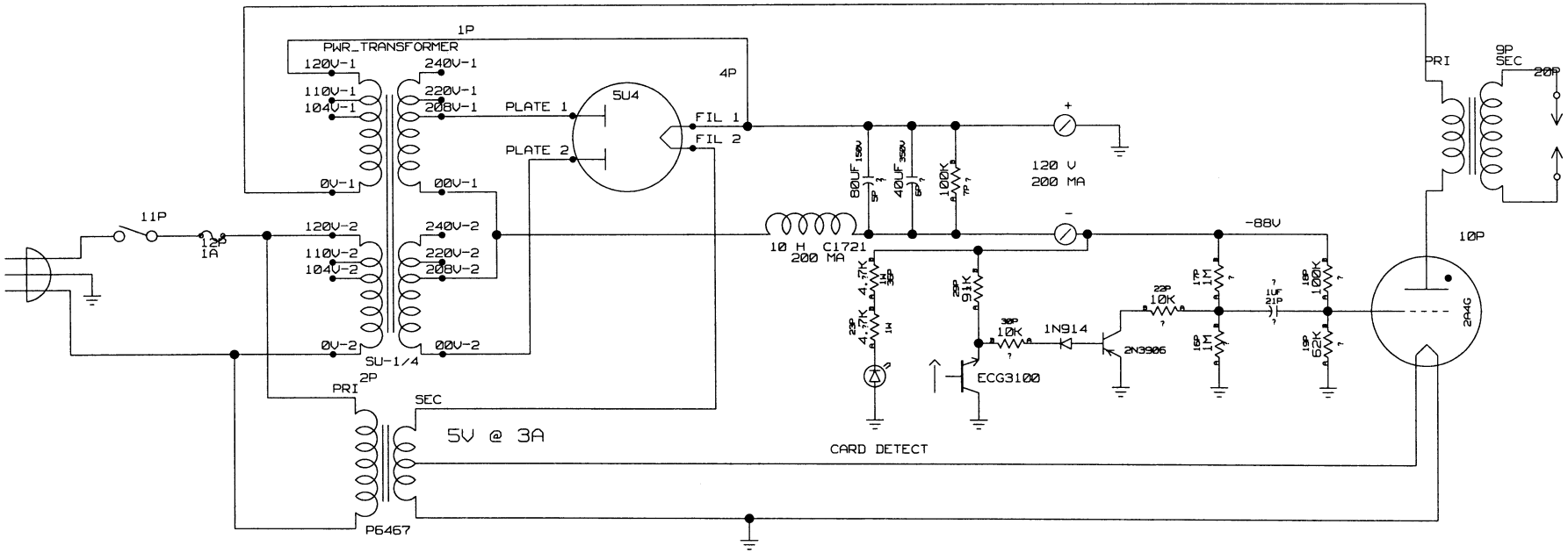

REQUESTOR	JOB ORDER	DESIGNED BY GARY SLEEGE	AMES LABORATORY IOWA STATE UNIVERSITY AMES, IOWA 50011	TITLE ABC PUNCH DISPLAY			
GROUP LEADER	DATE OCTOBER 21, 1998	LAYOUT BY		FILE NO 22521	REVISION		
				APPROVED BY	VERIFIED BY		

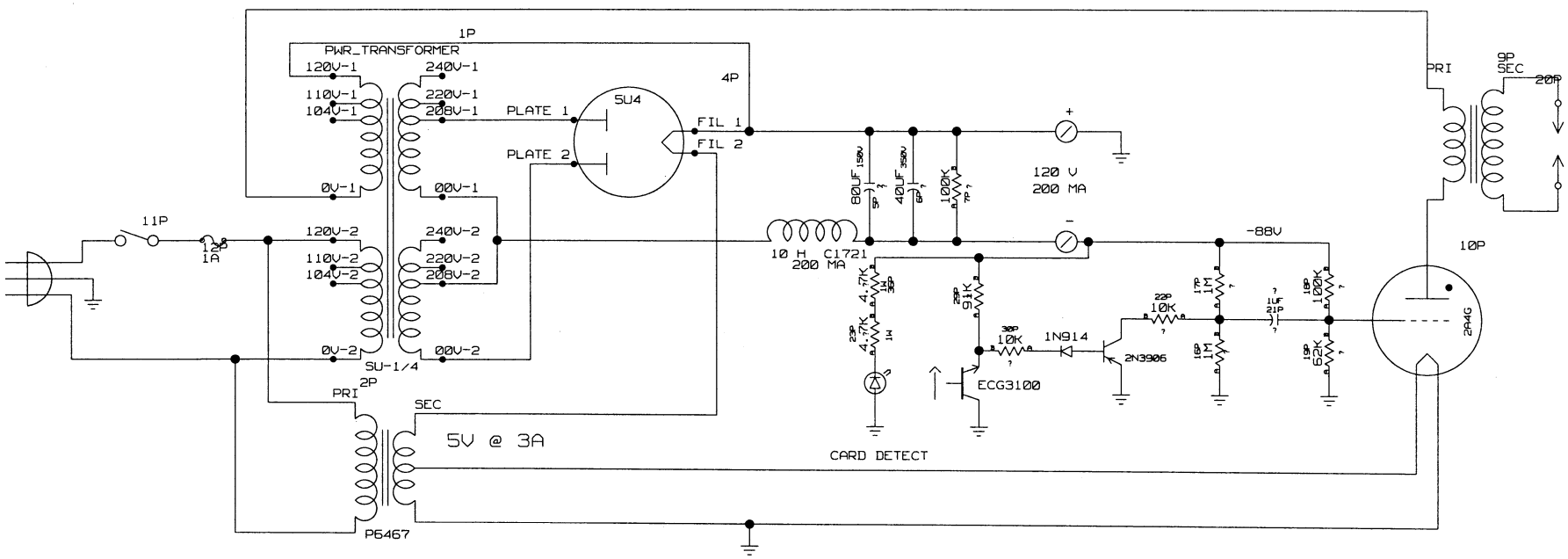

REQUESTOR	JOB ORDER	DESIGNED BY GARY SLEEGE	AMES LABORATORY IOWA STATE UNIVERSITY AMES, IOWA 50011	TITLE ABC PUNCH DISPLAY
GROUP LEADER	DATE OCTOBER 21, 1998	LAYOUT BY		FILE NO 22521 / REVISION
				APPROVED BY / VERIFIED BY