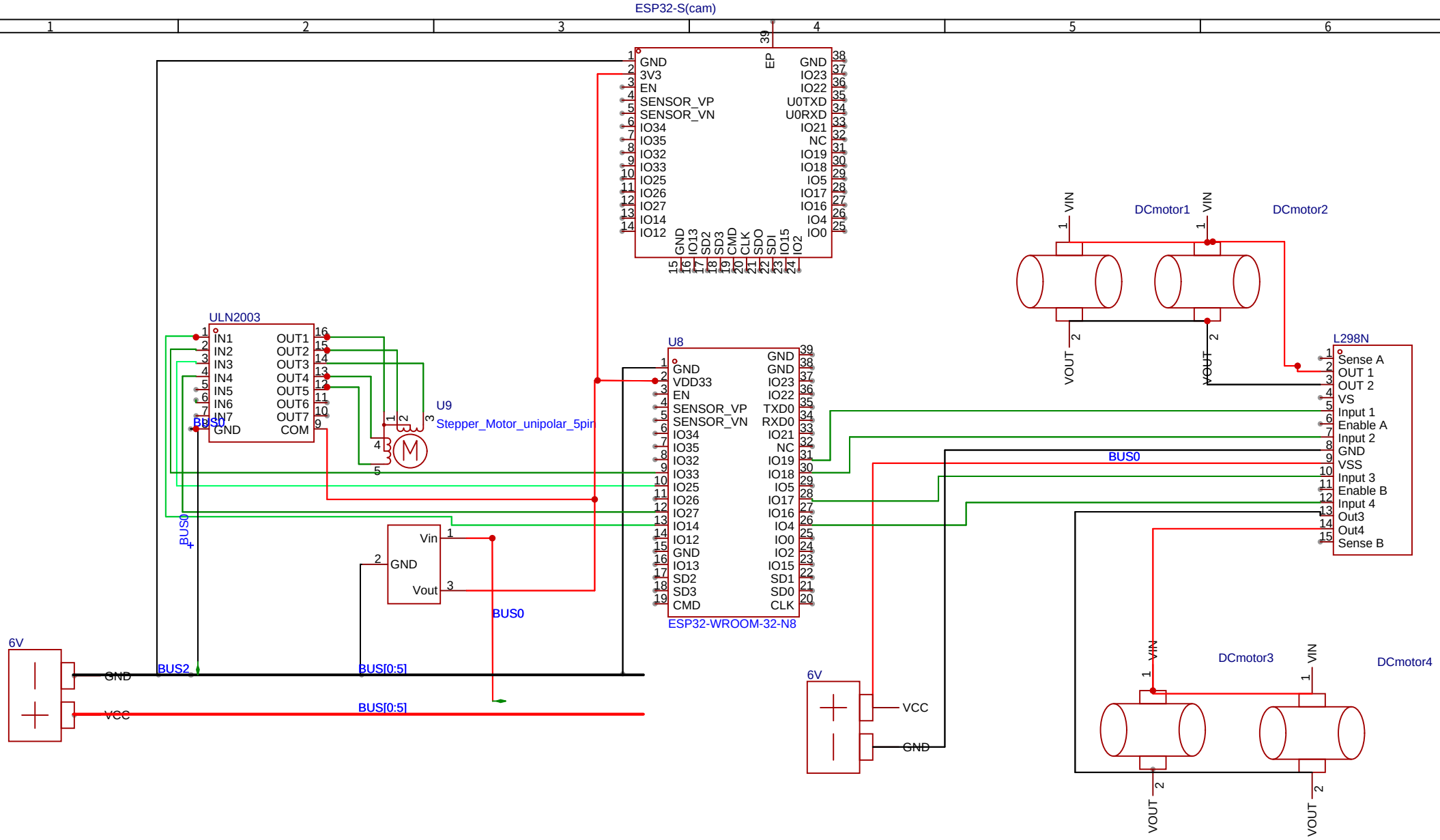

Schematic	Schematic	Create at	2025-02-19
		Update at	2025-02-21
Board	Board1	Page	P1
Drawn	robot-schematic		
Reviewed			
		Version	Size	Page 1 Total 1
EasyEDA		V1.0	A4	EasyEDA.com