ENGINEERING DRAWING

DE-47 Mechatronics

Syndicate – A

Project Report

1. MAHAD KHURRAM (541913)
2. ARBAB KHAN LODHI (542025)
3. MUHAMMAD ABDULLAH (540892)

SUBMITED TO : MAM ALEEYA

Introduction

The Robot Gripper Mechanism is a fundamental end-effector used in robotics to interact with the physical environment. This project involves the detailed 3D modeling and orthographic projection of a mechanical gripper designed for precision handling. The design utilizes a combination of gears and linkages to convert rotational input into synchronized linear or angular movement of the gripping jaws. This report documents the individual components, their assembly, and the mechanical logic behind the design.

Applications

Industrial Automation: Used on assembly lines for "pick and place" operations of mechanical parts.

Medical Robotics: Employed in surgical robots for precise tissue manipulation or tool handling.

Logistics: Integrated into warehouse robots for sorting and moving packages of various sizes.

Working Principle

The gripper operates on a gear-driven linkage system where a central Base Gear provides the driving torque. This gear meshes with two Gear Links, causing them to rotate in opposite directions simultaneously. As these gear links rotate, they actuate a series of Links connected to the Grippers, ensuring that the jaws open and close with equal force and alignment to securely grasp an object.

Parts

Table of Components:

| 1 | Base Mounting Bracket of L shape created using line tool and extrude with a specific thickness

| 2 & 3 | Gear Link 1 & 2 | Designed using a circular pattern for gear teeth and an offset arm for linkage attachment. |

| 4 | Gripper | Modeled with a serrated inner surface (teeth) to increase friction and grip reliability. |

| 5 | Link | A simple flat bar with two holes, modeled via extrusion and fillet commands. |

| 6 | Pin | A cylindrical fastener with a head, used to pivot the moving parts together. |

| 7 | Base Plate | Created using a base sketch with chamfered corners and extruded holes for mounting. |

| 8 | Base Gear | A high-tooth-count gear that serves as the primary driver for the mechanism.

Assembly

The final assembly integrates all eight unique components into a single functional unit. The Base Plate serves as the foundation where the Base Gear and Gear Links are pivoted. Each Gripper is then connected to the gear links via the secondary Links, secured by Pins. The resulting model demonstrates a symmetric movement profile, allowing for a balanced grip.

1. BASE MOUNTING PLATE

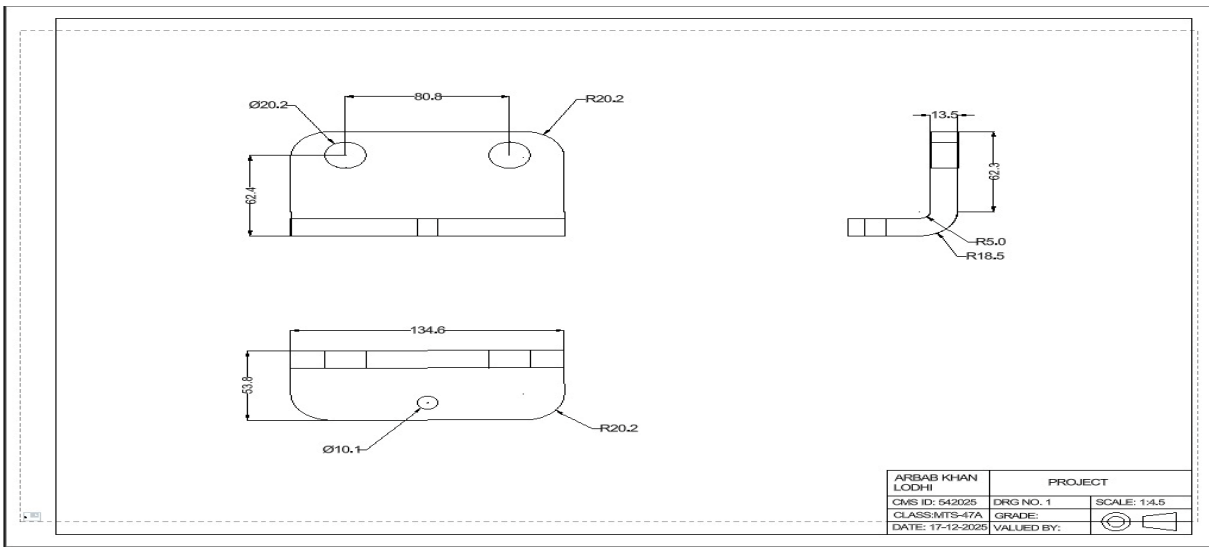

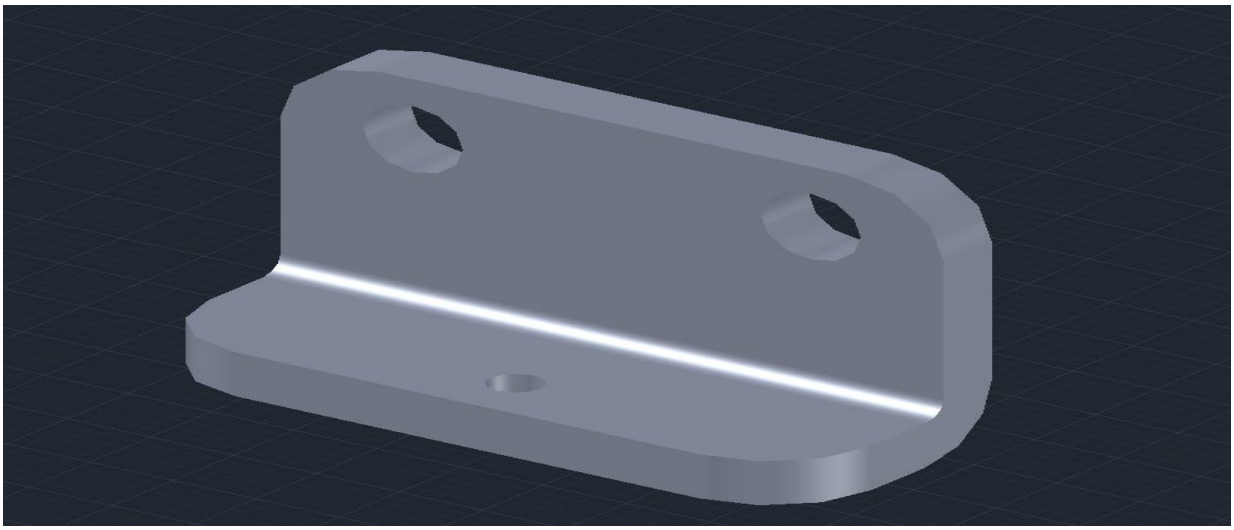

2 . GEAR LINK (1)

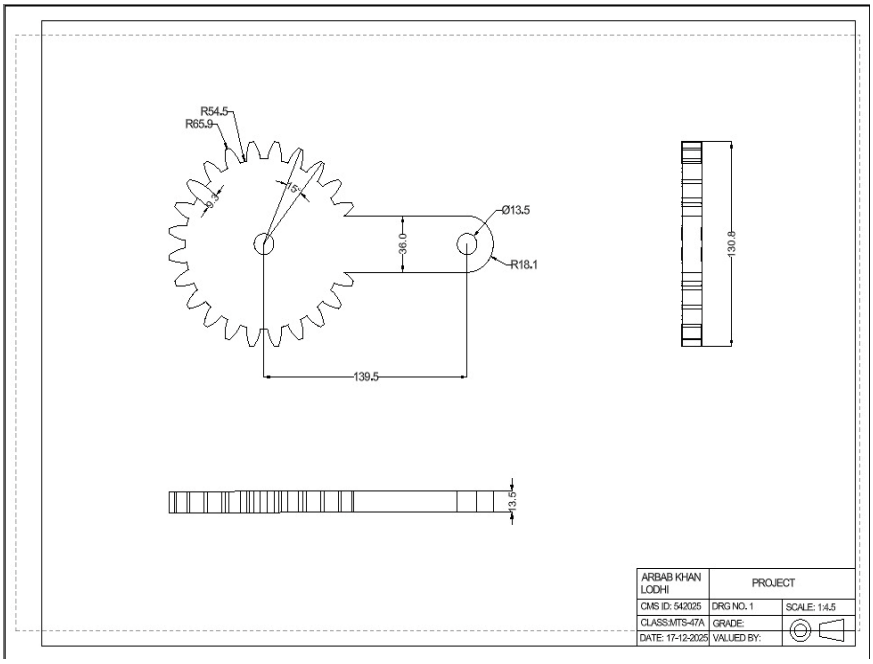

3. GEAR LINK (2)

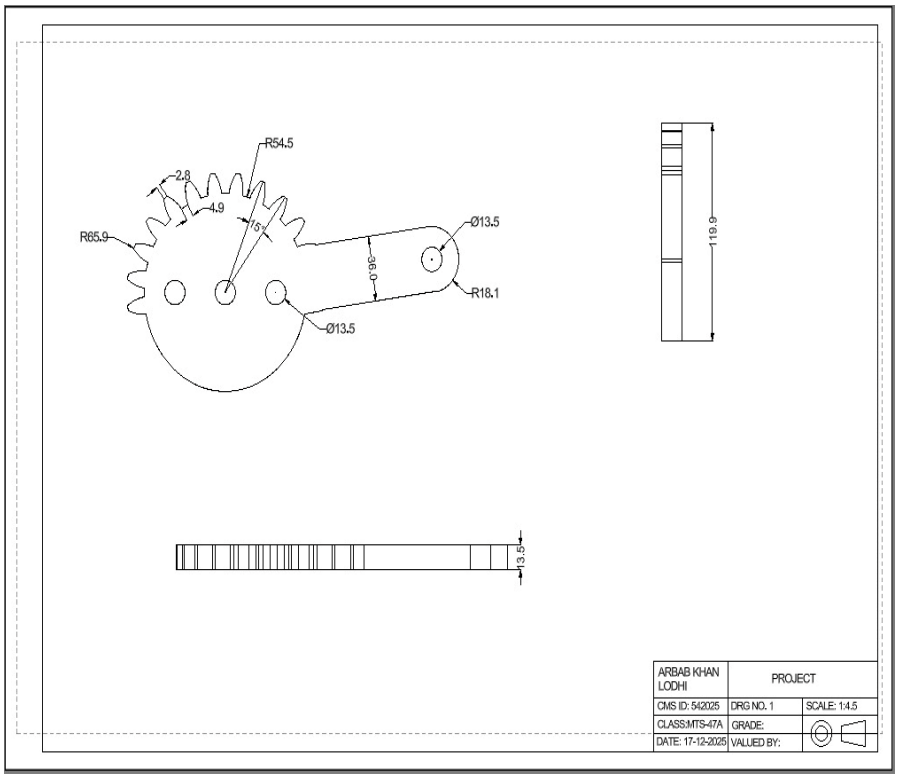

4. GRIPPER

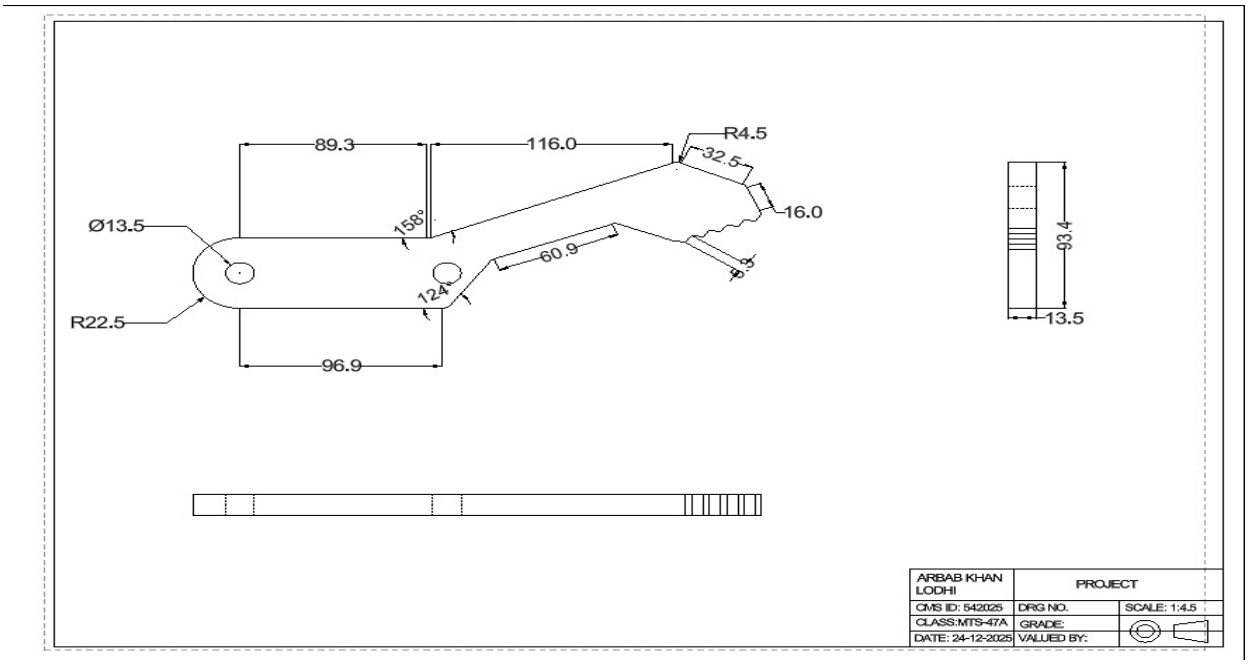

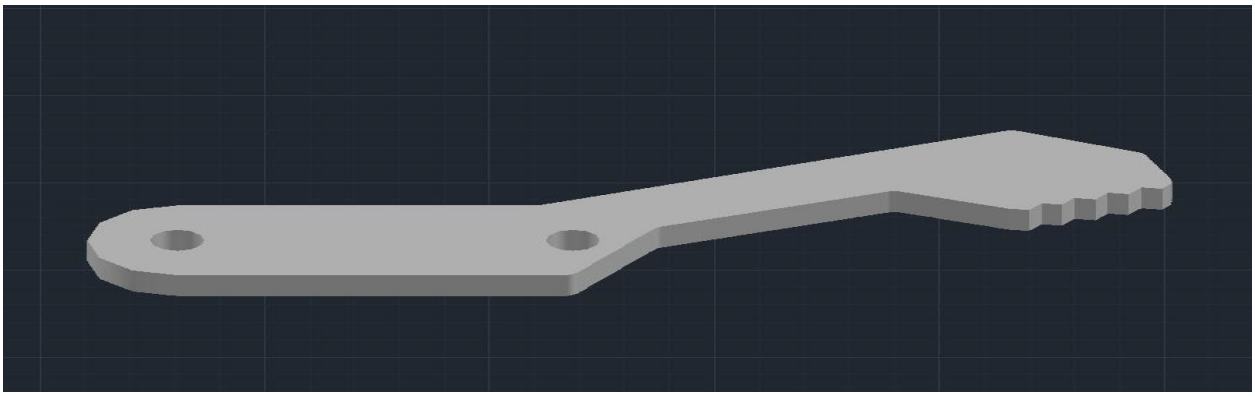

5. LINK

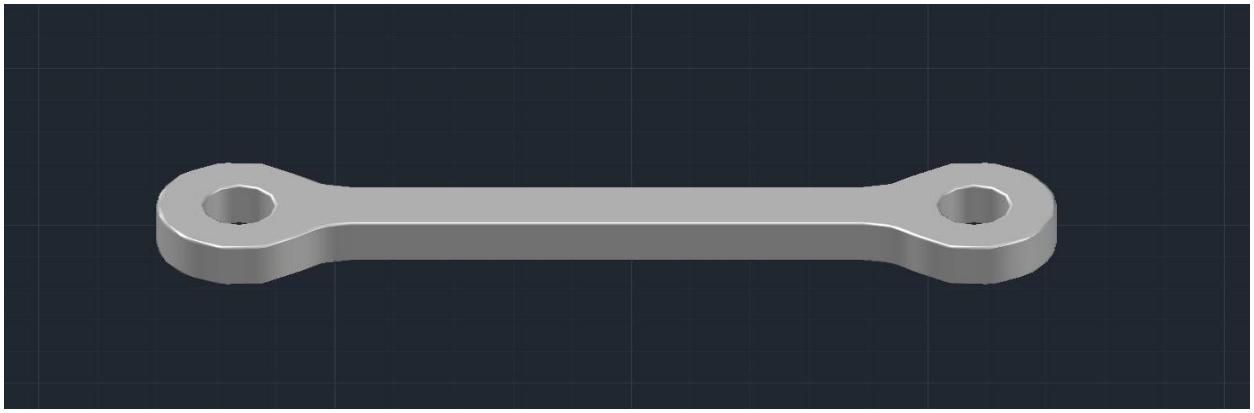

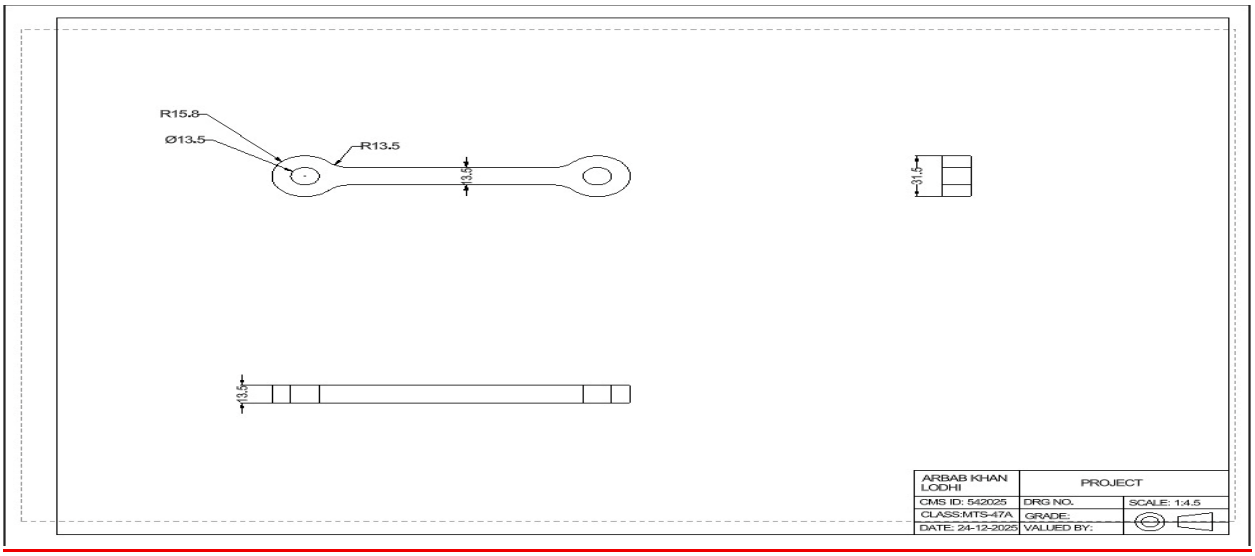
R15.8
Ø13.5
R13.5
13.5
31.5
13.5
ARBAB KHAN LODHI
PROJECT
CMS ID: 542025
DRG NO.
SCALE: 1:4.5
CLASS:MTS-47A
GRADE:
DATE: 24-12-2025
VALUED BY:

4. PIN

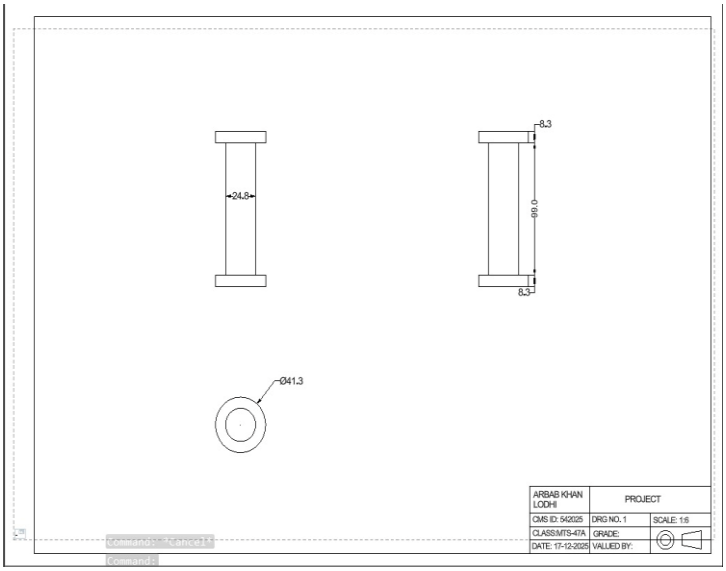
24.8
8.3
90.0
8.3
Ø41.3
ARBAB KHAN LODHI
PROJECT
CMS ID: 542025
DRG NO. 1
SCALE: 1:6
CLASS:MTS-47A
GRADE:
DATE: 17-12-2025
VALUED BY:

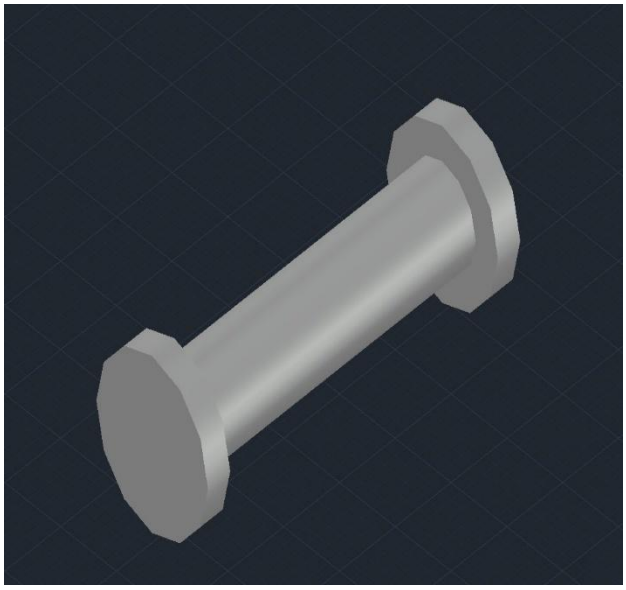

`7. BASE PLATE

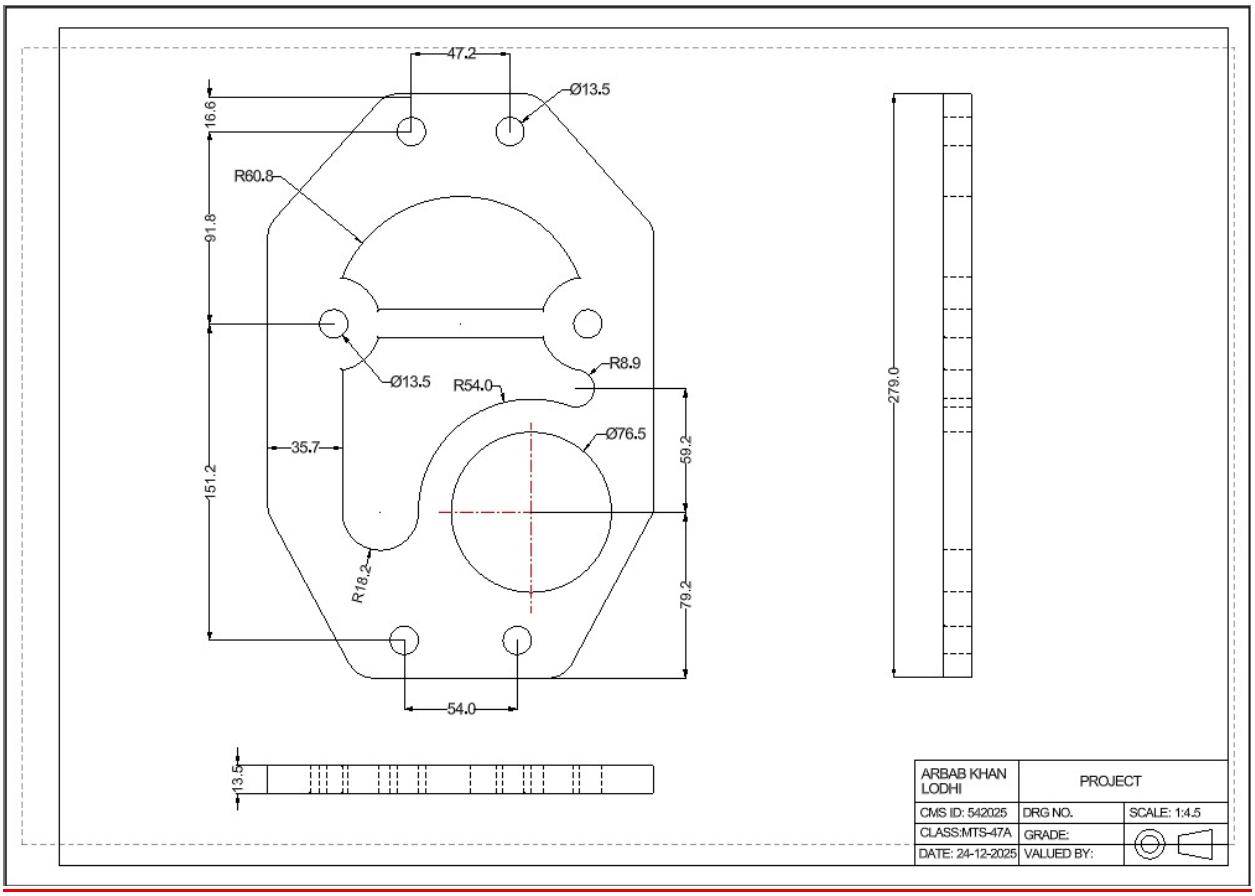
47.2
Ø13.5
16.6
R60.8
91.8
Ø13.5
R54.0
R8.9
35.7
Ø76.5
59.2
151.2
R18.2
79.2
54.0
279.0
13.5
ARBAB KHAN LODHI
PROJECT
CMS ID: 542025
DRG NO.
SCALE: 1:4.5
CLASS:MTS-47A
GRADE:
DATE: 24-12-2025
VALUED BY:

8. BASE GEAR

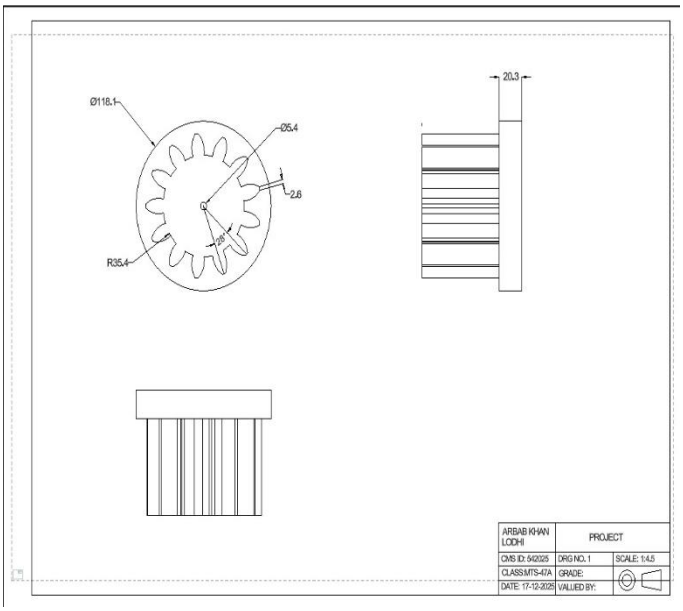

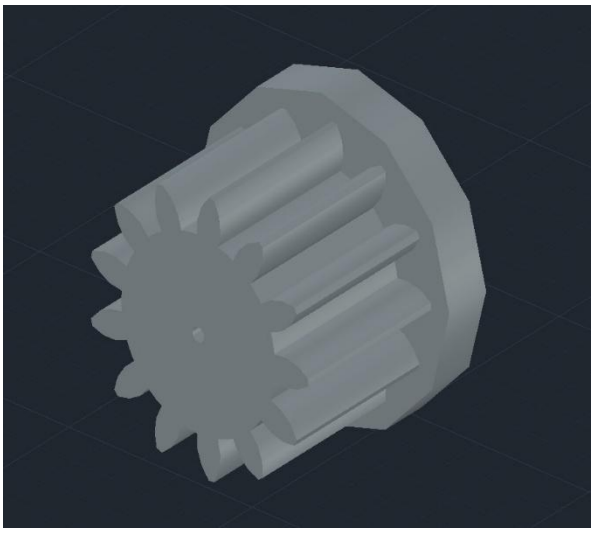

CONCLUSION
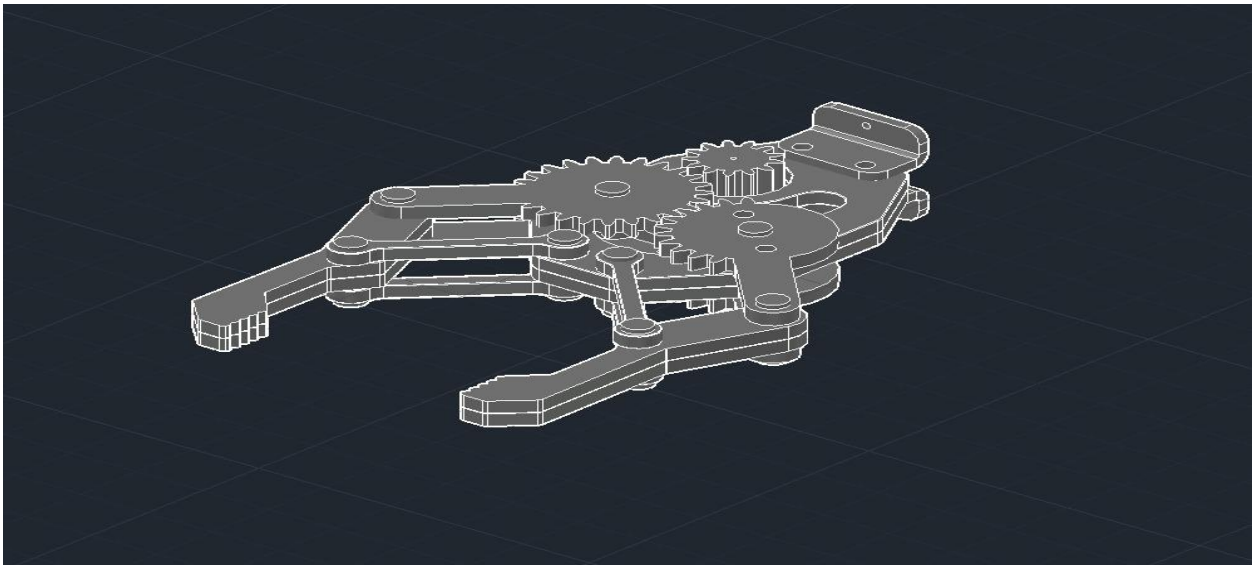
This lab project successfully demonstrated the process of designing a complex Robot Gripper Mechanism. By modeling each component individually and then assembling them, the relationship between gear ratios and linkage movement was clearly visualized. The final 3D model meets the required design specifications for symmetry and mechanical efficiency, providing a solid foundation for further robotic end-effector studies.