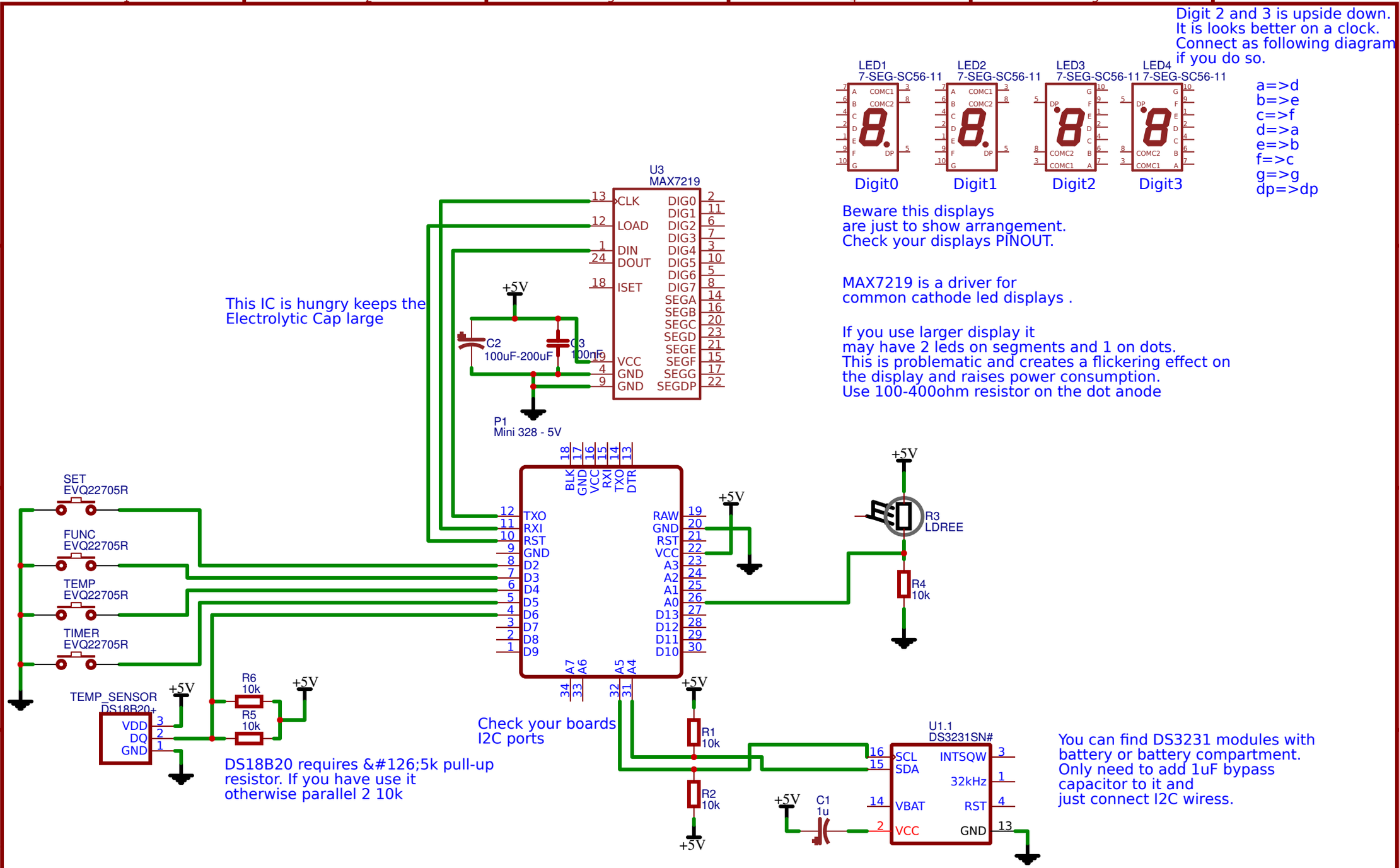
Digit 2 and 3 is upside down.
It is looks better on a clock.
Connect as following diagram
if you do so.
LED1
7-SEG-SC56-11
LED2
7-SEG-SC56-11
LED3
7-SEG-SC56-11
LED4
7-SEG-SC56-11
Digit0
Digit1
Digit2
Digit3
a=>d
b=>e
c=>f
d=>a
e=>b
f=>c
g=>g
dp=>dp
Beware this displays
are just to show arrangement.
Check your displays PINOUT.
MAX7219 is a driver for
common cathode led displays .
If you use larger display it
may have 2 leds on segments and 1 on dots.
This is problematic and creates a flickering effect on
the display and raises power consumption.
Use 100-400ohm resistor on the dot anode
U3
MAX7219
CLK
LOAD
DIN
DOUT
ISET
VCC
GND
GND
DIG0
DIG1
DIG2
DIG3
DIG4
DIG5
DIG6
DIG7
SEGA
SEGB
SEGC
SEGD
SEGE
SEGF
SEGG
SEGDP
This IC is hungry keeps the
Electrolytic Cap large
+5V
C2
100uF-200uF
C3
100nF
P1
Mini 328 - 5V
BLK
GND
VCC
RXI
TXO
DTR
TXO
RXI
RST
GND
D2
D3
D4
D5
D6
D7
D8
D9
RAW
GND
RST
VCC
A3
A2
A1
A0
D13
D12
D11
D10
A7
A6
A5
A4
SET
EVQ22705R
FUNC
EVQ22705R
TEMP
EVQ22705R
TIMER
EVQ22705R
R3
LDREE
R4
10k
TEMP_SENSOR
DS18B20+
VDD
DQ
GND
R6
10k
R5
10k
DS18B20 requires ~5k pull-up
resistor. If you have use it
otherwise parallel 2 10k
Check your boards
I2C ports
R1
10k
R2
10k
U1.1
DS3231SN#
SCL
SDA
VBAT
VCC
INTSQW
32kHz
RST
GND
C1
1u
You can find DS3231 modules with
battery or battery compartment.
Only need to add 1uF bypass
capacitor to it and
just connect I2C wiress.
TITLE:
Sheet_1
REV: 1.0
Company: Your Company
Sheet: 1/1
Date: 2019-02-15
Drawn By: abdullahcanakci
EasyEDA