IE 203 PS 4 – Solutions

Q1. Integer Programming via Gomory Cutting Plane

Note: *The algorithm requires that all coefficients of variables in the constraints and all right-hand sides of constraints be integers. This is to ensure that if the original decision variables are integers, then the slack and excess variables will also be integers. Thus, a constraint such as* $x_1 + 0.5x_2 \leq 3.6$ *must be replaced by* $10x_1 + 5x_2 \leq 36$ *(Winston p. 548). Since our problem already has integer coefficients and right-hand sides, we do not need any such adjustment.*

The Integer Programming Problem

Maximize $Z = 5x_1 + 6x_2$ subject to:

$$\begin{aligned} 3x_1 + 2x_2 &\leq 10 \\ x_1 + 4x_2 &\leq 11 \\ x_1, x_2 &\geq 0, \text{ and integer.} \end{aligned}$$

Adding slack variables s_1, s_2 gives the standard-form system $3x_1 + 2x_2 + s_1 = 10,\ x_1 + 4x_2 + s_2 = 11$.

Tableau 1: Optimal LP Relaxation (Given)

Basic	Z	x_1	x_2	s_1	s_2	RHS
Z	1	0	0	7/5	4/5	114/5 (22.8)
x_1	0	1	0	2/5	−1/5	9/5 (1.8)
x_2	0	0	1	−1/10	3/10	23/10 (2.3)

All reduced costs ≥ 0; LP relaxation is optimal. **LP optimum:** $x_1 = 9/5 = 1.8$, $x_2 = 23/10 = 2.3$, $Z = 114/5 = 22.8$. Both variables are *fractional* $\Rightarrow$ Gomory cuts required.

Solution

First Gomory Cut

Source Row Selection

When multiple basic variables have fractional RHS values, any of them can be freely chosen as the source row. The algorithm will terminate regardless of the choice. Some practitioners prefer a heuristic such as selecting the row whose fractional part is closest to $\frac{1}{2}$ (maximising the "cut strength"), but this is not critical. We apply that heuristic here.

- x_1 row: RHS $= 1.8$, fractional part $= 0.8$, distance to $\frac{1}{2}$: 0.3.
- x_2 row: RHS $= 2.3$, fractional part $= 0.3$, distance to $\frac{1}{2}$: 0.2.

Select the x_2 **row** (smallest distance, $0.2 < 0.3$).

Generating Cut 1

Step 1 – Write the source row as integers + fractions.
The x_2 row equation from Tableau 1 is:

$$x_2 - \tfrac{1}{10}s_1 + \tfrac{3}{10}s_2 = \tfrac{23}{10}$$

Every coefficient (and the RHS) is decomposed as $a = \lfloor a \rfloor + f_a$ where the *integer part* $\lfloor a \rfloor$ is the largest integer $\leq a$ and the *fractional part* $f_a = a - \lfloor a \rfloor \in [0, 1)$:

$$\begin{aligned} -\tfrac{1}{10} &= -1 + \tfrac{9}{10} & \lfloor -\tfrac{1}{10} \rfloor &= -1, \quad f = \tfrac{9}{10} \\ \tfrac{3}{10} &= 0 + \tfrac{3}{10} & \lfloor \tfrac{3}{10} \rfloor &= 0, \quad f = \tfrac{3}{10} \\ \tfrac{23}{10} &= 2 + \tfrac{3}{10} & \lfloor \tfrac{23}{10} \rfloor &= 2, \quad f = \tfrac{3}{10} \end{aligned}$$

Rewriting the row by splitting each term:

$$x_2 + \underbrace{(-1)s_1 + (0)s_2}_{\text{integer parts}} + \underbrace{\tfrac{9}{10}s_1 + \tfrac{3}{10}s_2}_{\text{fractional parts}} = \underbrace{2}_{\text{integer part}} + \underbrace{\tfrac{3}{10}}_{\text{fractional part}}$$

Step 2 – Collect all integer-coefficient terms on the LHS.
Move the integer parts of every term to the left:

$$\underbrace{x_2 - s_1 - 2}_{\text{integer at any integer solution}} = \underbrace{\tfrac{3}{10} - \tfrac{9}{10}s_1 - \tfrac{3}{10}s_2}_{\text{strictly fractional terms}}$$

At any feasible integer solution all variables are non-negative integers, so the LHS is an integer. Therefore the RHS must also be an integer.

Step 3 – Derive the cut.
The RHS equals $\frac{3}{10} - \frac{9}{10}s_1 - \frac{3}{10}s_2$. Since $s_1, s_2 \geq 0$ and the fractional coefficients are in $[0, 1)$, we have $\frac{9}{10}s_1 + \frac{3}{10}s_2 \geq 0$, so RHS $\leq \frac{3}{10} < 1$. For the RHS to be an integer it must be ≤ 0:

$$\tfrac{3}{10} - \tfrac{9}{10}s_1 - \tfrac{3}{10}s_2 \leq 0 \implies -\tfrac{9}{10}s_1 - \tfrac{3}{10}s_2 \leq -\tfrac{3}{10}$$

This is the Gomory cut: the RHS must "use up" its fractional surplus, forcing the non-basic variables away from zero.

Step 4 – Add a slack variable to enter the tableau.
Add a non-negative slack $s_3 \geq 0$ to convert the inequality to an equality:

$$\boxed{-\tfrac{9}{10}s_1 - \tfrac{3}{10}s_2 + s_3 = -\tfrac{3}{10}}$$

At the current LP optimal $s_1 = s_2 = 0$, so $s_3 = -3/10 < 0$: the cut is violated, and the **Dual Simplex** will pivot to restore feasibility.

Tableau After Adding Cut 1

Basic	Z	x_1	x_2	s_1	s_2	s_3	RHS
Z	1	0	0	7/5	4/5	0	114/5
x_1	0	1	0	2/5	−1/5	0	9/5
x_2	0	0	1	−1/10	3/10	0	23/10
s_3	0	0	0	$\boxed{-9/10}$	−3/10	1	−3/10

Dual Simplex Pivot: s_3 has the most negative RHS $(-3/10) \Rightarrow s_3$ leaves.
Ratio test (Z-row ÷ —negative entries in s_3 row— only):

$$\min\left\{\frac{7/5}{9/10}, \frac{4/5}{3/10}\right\} = \min\left\{\frac{14}{9}, \frac{8}{3}\right\} = \frac{14}{9} \Rightarrow s_1 \text{ enters. Pivot element: } \boxed{-9/10}.$$

Tableau 2: After the First Cut

Basic	Z	x_1	x_2	s_1	s_2	s_3	RHS
Z	1	0	0	0	1/3	14/9	67/3 ($22.\overline{3}$)
x_1	0	1	0	0	−1/3	4/9	5/3 ($1.\overline{6}$)
x_2	0	0	1	0	1/3	−1/9	7/3 ($2.\overline{3}$)
s_1	0	0	0	1	1/3	−10/9	1/3 ($0.\overline{3}$)

Current solution: $x_1 = 5/3$, $x_2 = 7/3$, $Z = 67/3 \approx 22.33$. Still fractional.

Second Gomory Cut

Source Row Selection

All three non-Z basic variables have fractional RHS values; any of them could be chosen as the source row.

- x_1 row: RHS $= 5/3 \approx 1.667$, fractional part $= 2/3$, distance to $\frac{1}{2}$: ≈ 0.167.
- x_2 row: RHS $= 7/3 \approx 2.333$, fractional part $= 1/3$, distance to $\frac{1}{2}$: ≈ 0.167.
- s_1 row: RHS $= 1/3 \approx 0.333$, fractional part $= 1/3$, distance to $\frac{1}{2}$: ≈ 0.167.

All three rows are tied under the heuristic. We arbitrarily select the x_1 **row**.

Generating Cut 2

Step 1 – Write the source row as integers + fractions.
The x_1 row equation from Tableau 2 is:

$$x_1 - \tfrac{1}{3}s_2 + \tfrac{4}{9}s_3 = \tfrac{5}{3}$$

Decompose every coefficient:

$$\begin{aligned} -\tfrac{1}{3} &= -1 + \tfrac{2}{3} & \qquad \lfloor -\tfrac{1}{3} \rfloor &= -1, \quad f = \tfrac{2}{3} \\ \tfrac{4}{9} &= 0 + \tfrac{4}{9} & \lfloor \tfrac{4}{9} \rfloor &= 0, \quad f = \tfrac{4}{9} \\ \tfrac{5}{3} &= 1 + \tfrac{2}{3} & \lfloor \tfrac{5}{3} \rfloor &= 1, \quad f = \tfrac{2}{3} \end{aligned}$$

Rewriting the row by splitting each term:

$$x_1 + \underbrace{(-1)s_2 + (0)s_3}_{\text{integer parts}} + \underbrace{\tfrac{2}{3}s_2 + \tfrac{4}{9}s_3}_{\text{fractional parts}} = \underbrace{1}_{\text{integer part}} + \underbrace{\tfrac{2}{3}}_{\text{fractional part}}$$

Step 2 – Collect all integer-coefficient terms on the LHS.

$$\underbrace{x_1 - s_2 - 1}_{\text{integer at any integer solution}} = \underbrace{\tfrac{2}{3} - \tfrac{2}{3}s_2 - \tfrac{4}{9}s_3}_{\text{strictly fractional terms}}$$

The LHS is an integer at any integer solution, so the RHS must be too.

Step 3 – Derive the cut.
Since $s_2, s_3 \geq 0$ and fractional coefficients $\in [0, 1)$, the RHS is $\leq \frac{2}{3} < 1$. For the RHS to be an integer it must be ≤ 0:

$$\tfrac{2}{3} - \tfrac{2}{3}s_2 - \tfrac{4}{9}s_3 \leq 0 \implies -\tfrac{2}{3}s_2 - \tfrac{4}{9}s_3 \leq -\tfrac{2}{3}$$

Step 4 – Add a slack variable to enter the tableau.
Add slack $s_4 \geq 0$:

$$\boxed{-\tfrac{2}{3}s_2 - \tfrac{4}{9}s_3 + s_4 = -\tfrac{2}{3}}$$

Tableau After Adding Cut 2

Basic	Z	x_1	x_2	s_1	s_2	s_3	s_4	RHS
Z	1	0	0	0	1/3	14/9	0	67/3
x_1	0	1	0	0	−1/3	4/9	0	5/3
x_2	0	0	1	0	1/3	−1/9	0	7/3
s_1	0	0	0	1	1/3	−10/9	0	1/3
s_4	0	0	0	0	$\boxed{-2/3}$	−4/9	1	−2/3

Dual Simplex Pivot: s_4 has the most negative RHS $(-2/3) \Rightarrow s_4$ leaves.
Ratio test:

$$\min\left\{\frac{1/3}{2/3}, \frac{14/9}{4/9}\right\} = \min\left\{\frac{1}{2}, \frac{7}{2}\right\} = \frac{1}{2} \Rightarrow s_2 \text{ enters. Pivot element: } \boxed{-2/3}.$$

Tableau 3: Final Integer Optimal Solution

Basic	Z	x_1	x_2	s_1	s_2	s_3	s_4	RHS
Z	1	0	0	0	0	4/3	1/2	**22**
x_1	0	1	0	0	0	2/3	−1/2	**2**
x_2	0	0	1	0	0	−1/3	1/2	**2**
s_1	0	0	0	1	0	−4/3	1/2	0
s_2	0	0	0	0	1	2/3	−3/2	1

All reduced costs ≥ 0 and all basic variables are **integers** $\Rightarrow$ algorithm terminates.

Conclusion

- **Optimal Integer Solution:** $x_1 = 2$, $x_2 = 2$
- **Maximum Objective Value:** $Z = 5(2) + 6(2) = \mathbf{22}$

The algorithm required **2 Gomory cuts**, each resolved by one dual simplex pivot.

Bonus: Recovering the Cuts in Original-Variable Space

The Gomory cuts are expressed in terms of slack variables s_1, s_2, s_3. Substituting their definitions recovers the geometric meaning.

Cut 1: $-\frac{9}{10}s_1 - \frac{3}{10}s_2 \leq -\frac{3}{10}$

Substitute $s_1 = 10 - 3x_1 - 2x_2$ and $s_2 = 11 - x_1 - 4x_2$:

$$\begin{aligned}
&-\tfrac{9}{10}(10 - 3x_1 - 2x_2) - \tfrac{3}{10}(11 - x_1 - 4x_2) \leq -\tfrac{3}{10} \\
&-9 + \tfrac{27}{10}x_1 + \tfrac{18}{10}x_2 - \tfrac{33}{10} + \tfrac{3}{10}x_1 + \tfrac{12}{10}x_2 \leq -\tfrac{3}{10} \\
&-\tfrac{123}{10} + 3x_1 + 3x_2 \leq -\tfrac{3}{10} \\
&3x_1 + 3x_2 \leq 12 \\
&\Longrightarrow \quad \boxed{x_1 + x_2 \leq 4}
\end{aligned}$$

Cut 2: $-\frac{2}{3}s_2 - \frac{4}{9}s_3 \leq -\frac{2}{3}$

We need s_3 in terms of x_1, x_2. From Cut 1: $-\frac{9}{10}s_1 - \frac{3}{10}s_2 + s_3 = -\frac{3}{10}$, so $s_3 = -\frac{3}{10} + \frac{9}{10}s_1 + \frac{3}{10}s_2$. Substituting the original slacks:

$$s_3 = -\tfrac{3}{10} + \tfrac{9}{10}(10 - 3x_1 - 2x_2) + \tfrac{3}{10}(11 - x_1 - 4x_2) = 12 - 3x_1 - 3x_2$$

Now substitute $s_2 = 11 - x_1 - 4x_2$ and $s_3 = 12 - 3x_1 - 3x_2$ into Cut 2:

$$
\begin{aligned}
&-\tfrac{2}{3}(11 - x_1 - 4x_2) - \tfrac{4}{9}(12 - 3x_1 - 3x_2) \le -\tfrac{2}{3} \\
&-\tfrac{22}{3} + \tfrac{2}{3}x_1 + \tfrac{8}{3}x_2 - \tfrac{48}{9} + \tfrac{12}{9}x_1 + \tfrac{12}{9}x_2 \le -\tfrac{2}{3} \\
&-\tfrac{22}{3} - \tfrac{16}{3} + \tfrac{2}{3}x_1 + \tfrac{4}{3}x_1 + \tfrac{8}{3}x_2 + \tfrac{4}{3}x_2 \le -\tfrac{2}{3} \\
&-\tfrac{38}{3} + 2x_1 + 4x_2 \le -\tfrac{2}{3} \\
&2x_1 + 4x_2 \le 12 \\
&\implies \quad \boxed{x_1 + 2x_2 \le 6}
\end{aligned}
$$

Graphical Solution

The feasible region of the original LP is bounded by $3x_1 + 2x_2 \le 10$, $x_1 + 4x_2 \le 11$, and the non-negativity constraints $x_1, x_2 \ge 0$ (the axes). Each Gomory cut (drawn as its boundary line, i.e. the equality) progressively tightens the region. Note that all three boundary lines $3x_1 + 2x_2 = 10$, Cut 1 ($x_1 + x_2 = 4$), and Cut 2 ($x_1 + 2x_2 = 6$) happen to intersect at the same point $(2, 2)$, which is the integer optimum. Iso-profit lines $Z = 5x_1 + 6x_2 = c$ are shown for three values of c; the optimal one ($Z = 22$) is darker.

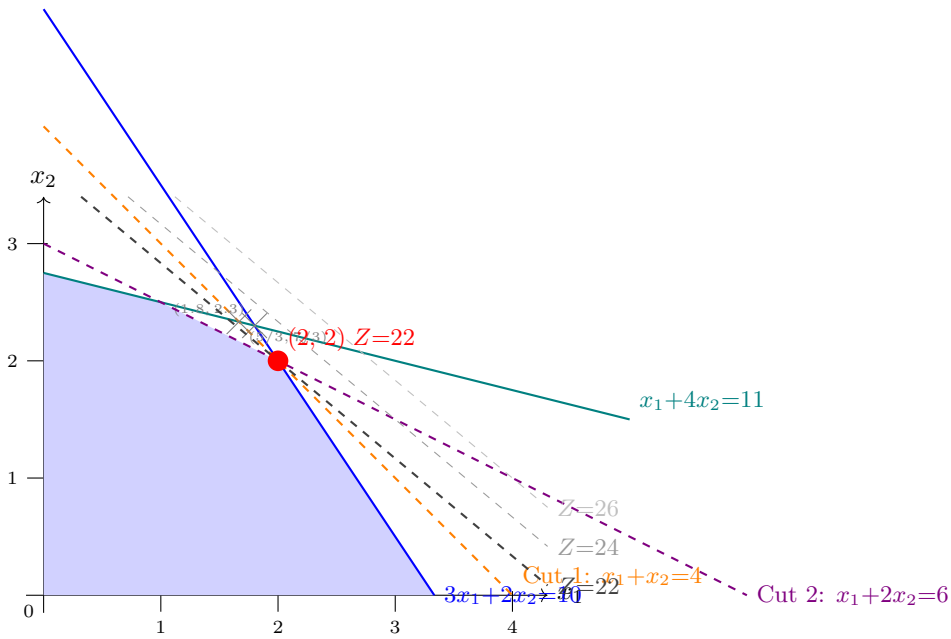

Q2. Project Selection via Branch-and-Bound

Note: *This question is very similar to the problem in PS 3 and is included here only as an additional example since it features an infeasible branch, which does not appear in the PS 3 problem. The solution method (Branch-and-Bound with greedy LP relaxation) is identical.*

Part a) IP Formulation

Let $x_i \in \{0,1\}$ equal 1 if project P_i is selected, 0 otherwise.

$$\begin{aligned} \max \quad & Z = 4x_1 + 14x_2 + 10x_3 + 12x_4 \\ \text{s.t.} \quad & 3x_1 + 2x_2 + 13x_3 + 14x_4 \le 15 \qquad \text{(Budget)} \\ & x_i \in \{0,1\}, \quad \forall\, i \in \{1,2,3,4\} \end{aligned}$$

Part b) Branch-and-Bound Solution

Sort projects by profit-to-cost ratio p_i/c_i in decreasing order:

Rank	**Project**	**Cost** c_i	**Profit** p_i	**Ratio** p_i/c_i
1	P_2	2	14	7.000
2	P_1	3	4	1.333
3	P_4	14	12	0.857
4	P_3	13	10	0.769

We search the B&B tree using **Depth-First Search (DFS)** (LIFO queue), branching on the **fractional** variable that follows the ranking above. At each node, we compute z_{LP} via the greedy fractional knapsack heuristic (optimal for the LP relaxation). Since all profits are integer, UB $= \lfloor z_{\text{LP}} \rfloor$.

Fathoming Rules:
1. **By Bound:** UB $\le$ LB.
2. **By Integrality:** LP solution is all-integer; update LB if improved.
3. **By Infeasibility:** Fixed items exceed capacity.

Step 1 — Node 1 (Root)

Fixed assignments: none (root node).

	P_2	P_1	P_4	P_3
c_i	2	3	14	13
x_i	1	1	10/14	0
Rem. cap	13	10	0	0

$z_{\text{LP}} = 14 + 4 + \frac{10}{14} \times 12 \approx 26.57 \quad \Rightarrow \quad \mathbf{UB} = 26, \quad \mathbf{LB} = -\infty.$

P_4 **is fractional** $\Rightarrow$ **branch on** x_4**.**

Subproblem list:
- **[Node 3]**
- **[Node 2]**

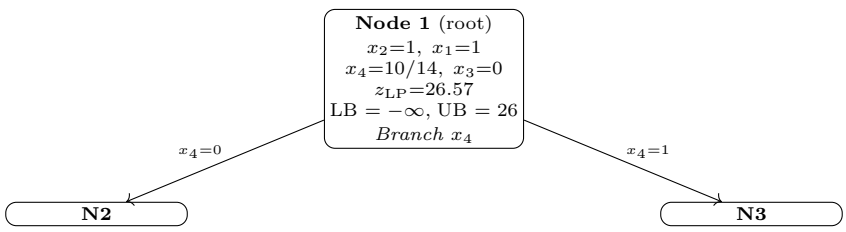

Step 2 — Node 2 ($x_4 = 0$)

Fixed: $x_4 = 0$.

	P_4	P_2	P_1	P_3
c_i	14	2	3	13
x_i	[0]	1	1	10/13
Rem. cap	15	13	10	0

$z_{\text{LP}} = 14 + 4 + \frac{10}{13} \times 10 \approx 25.69 \quad \Rightarrow \quad \textbf{UB} = 25, \quad \textbf{LB} = -\infty.$

P_3 **is fractional** $\Rightarrow$ **branch on** x_3**.**

Subproblem list:

- [Node 3]
- ~~[Node 2]~~
- **[Node 5]**
- **[Node 4]**

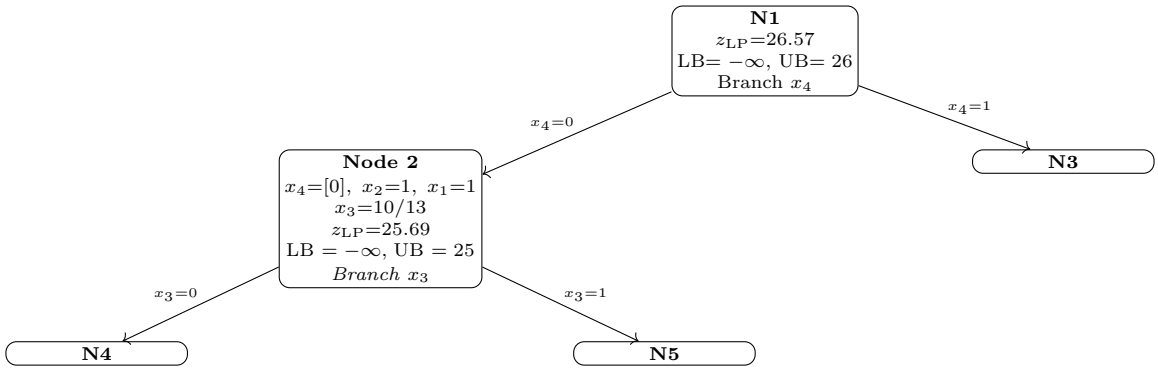

Step 3 — Node 4 ($x_4 = 0$, $x_3 = 0$)

Fixed: $x_4 = 0$, $x_3 = 0$.

	P_4	P_3	P_2	P_1
c_i	14	13	2	3
x_i	[0]	[0]	1	1
Rem. cap	15	15	13	10

$z_{\text{LP}} = 14 + 4 = 18 \quad \Rightarrow \quad \textbf{UB} = 18, \quad \textbf{LB} = -\infty.$

LP solution is integer. $z = 18 \Rightarrow$ **LB updated to 18**.

Status: Fathomed by Integrality.

Subproblem list:

- [Node 3]
- ~~[Node 2]~~
- [Node 5]
- ~~[Node 4]~~

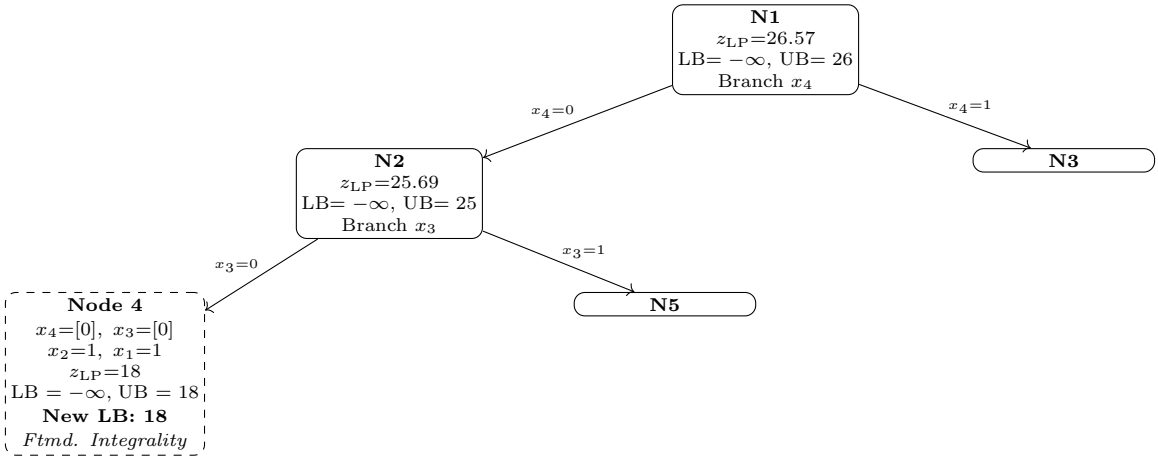

Step 4 — Node 5 ($x_4 = 0$, $x_3 = 1$)

Fixed: $x_4 = 0$, $x_3 = 1$.

	P_4	P_3	P_2	P_1
c_i	14	13	2	3
x_i	[0]	[1]	1	0
Rem. cap	15	2	0	0

$z_{\text{LP}} = 10 + 14 = 24 \quad \Rightarrow \quad \textbf{UB} = 24, \quad \textbf{LB} = 18.$

P_1 **cannot be taken, so** $x_1 = 0$**. Since no fractional variables exist, LP is integer.** However, note that B&B technically branches further if we simply follow DFS by variable index, or fathoms here by integrality. bb3.txt shows a branch on x_1.

LP solution is integer ($x_2 = 1, x_1 = 0$)**.** However, $z = 24 \Rightarrow$ **LB updated to 24**. BB trace technically branches on x_1 next since P_1 was next available. Let us follow the trace: actually the trace says "branch on x_1" at Node 5, with $z_{\text{LP}} = 24$.

Wait, re-reading the trace: Step 4 (Node 5) Fixed assignments : $x_4 = 0, x_3 = 1$ Value : $10 + 14 = 24.00$ Local UB = 24, Global LB = 18. Status: Branch on x_1.

P_1 **is the next available item** $\Rightarrow$ **branch on** x_1**.**

Subproblem list:

- [Node 3]
- ~~[Node 2]~~
- ~~[Node 5]~~
- ~~[Node 4]~~
- **[Node 7]**
- **[Node 6]**

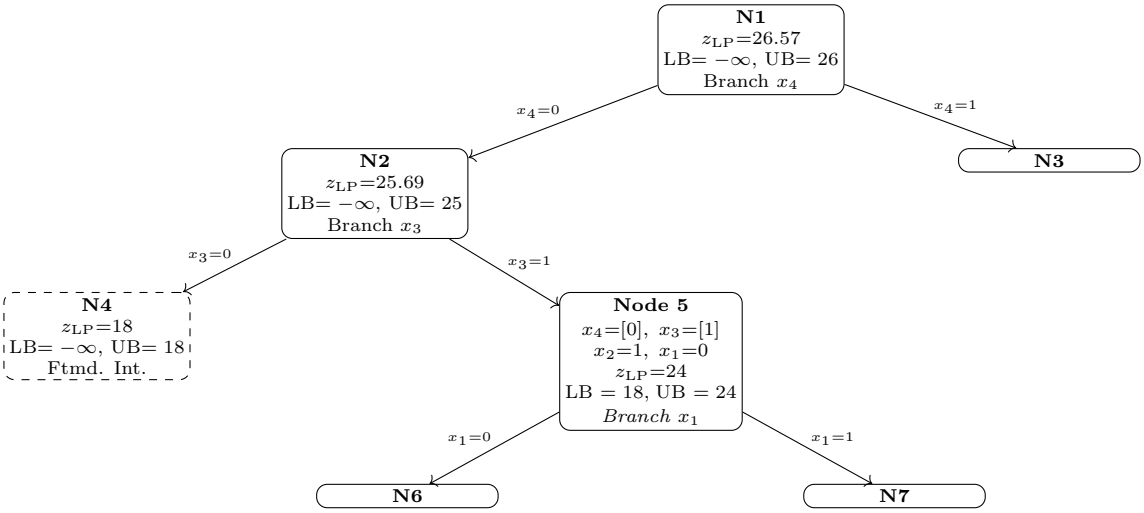

Step 5 — Node 6 ($x_4 = 0$, $x_3 = 1$, $x_1 = 0$)

Fixed: $x_4 = 0$, $x_3 = 1$, $x_1 = 0$.

	P_4	P_3	P_1	P_2
c_i	14	13	3	2
x_i	[0]	[1]	[0]	1
Rem. cap	15	2	2	0

$z_{\text{LP}} = 10 + 14 = 24 \quad \Rightarrow \quad \mathbf{UB} = 24, \quad \mathbf{LB} = 18.$

LP solution is integer. $z = 24 \Rightarrow$ **LB updated to 24**.

Status: Fathomed by Integrality.

Subproblem list:

- [Node 3]
- ~~[Node 2]~~
- ~~[Node 5]~~
- ~~[Node 4]~~
- [Node 7]
- ~~[Node 6]~~

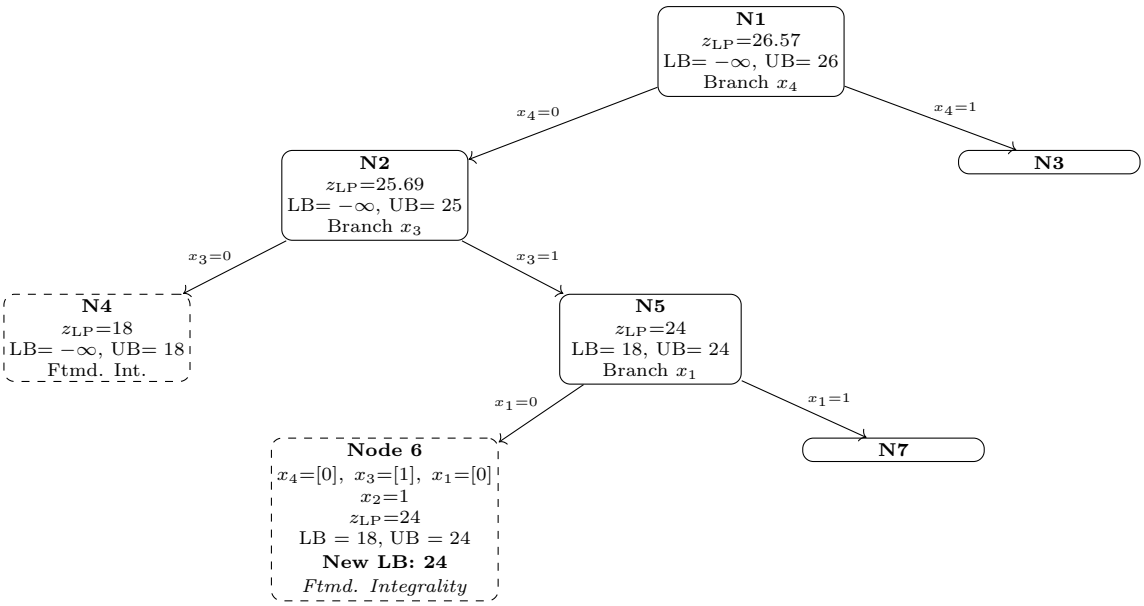

Step 6 — Node 7 ($x_4 = 0$, $x_3 = 1$, $x_1 = 1$)

Fixed: $x_4 = 0$, $x_3 = 1$, $x_1 = 1$.

	P_4	P_3	P_1	P_2
c_i	14	13	3	2
x_i	[0]	[1]	[1]	–
Rem. cap	15	2	-1	–

The capacity is exceeded ($13 + 3 = 16 > 15$). **LP problem is infeasible.**

Status: Fathomed by Infeasibility.

Subproblem list:

- [Node 3]
- ~~[Node 2]~~
- ~~[Node 5]~~
- ~~[Node 4]~~
- ~~[Node 7]~~
- ~~[Node 6]~~

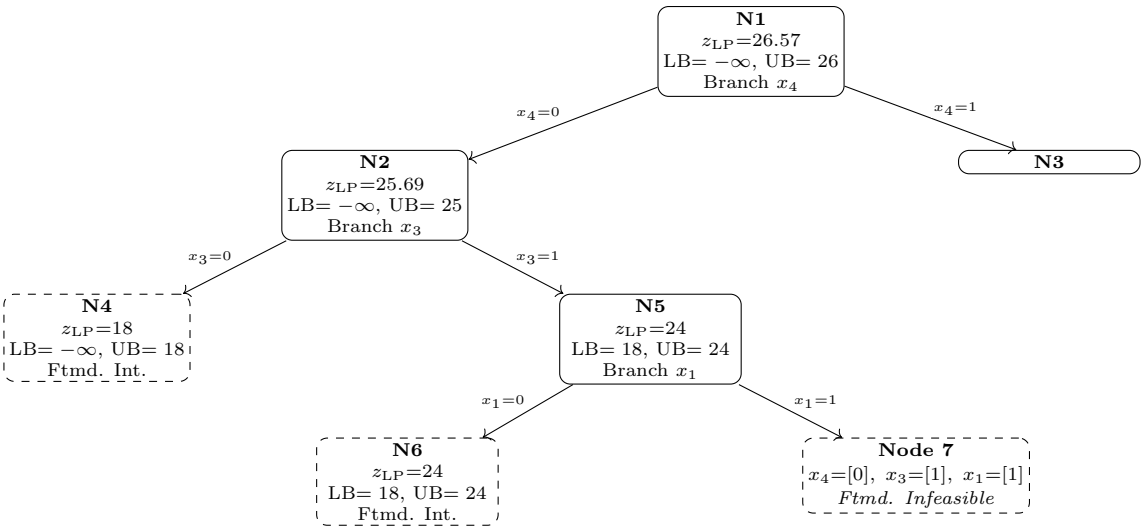

Step 7 — Node 3 ($x_4 = 1$)

Fixed: $x_4 = 1$.

	P_4	P_2	P_1	P_3
c_i	14	2	3	13
x_i	[1]	1/2	0	0
Rem. cap	1	0	0	0

$z_{\text{LP}} = 12 + \frac{1}{2} \times 14 = 19 \quad \Rightarrow \quad \mathbf{UB} = 19, \quad \mathbf{LB} = 24.$

Status: Fathomed by Bound ($\text{UB} = 19 \leq 24 = \text{LB}$).

Subproblem list:

- ~~[Node 3]~~
- ~~[Node 2]~~
- ~~[Node 5]~~
- ~~[Node 4]~~
- ~~[Node 7]~~
- ~~[Node 6]~~

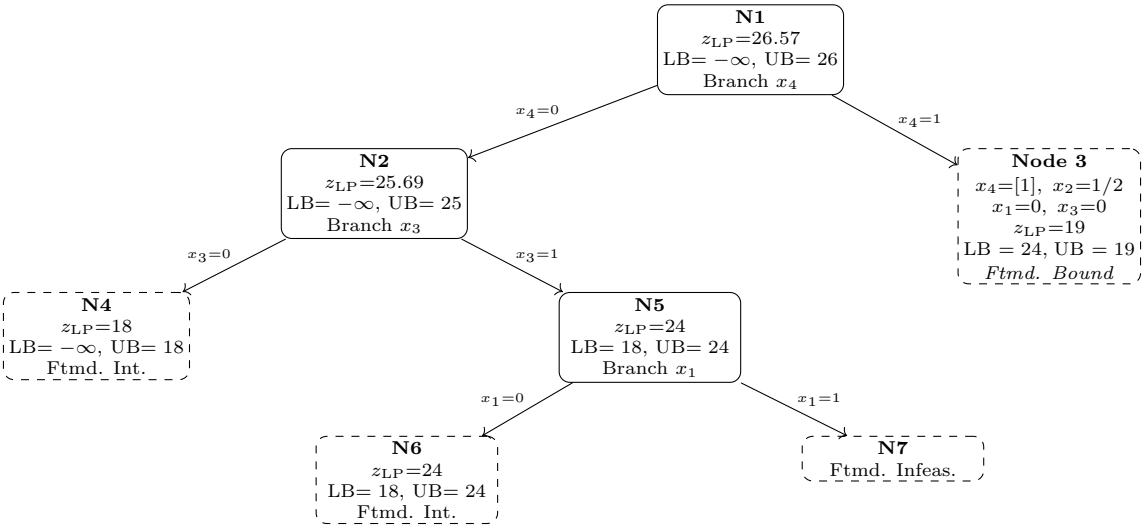

Optimal Solution

All subproblems fathomed. The optimal solution is:

$$x_2^* = 1, \quad x_3^* = 1, \quad x_1^* = x_4^* = 0$$

$$Z^* = 14 + 10 = \mathbf{24} \text{ (\$M profit)} \qquad \text{Total cost} = 2 + 13 = 15 \leq 15 \checkmark$$

Select projects **Software Platform** (P_2) and **Logistics Hub** (P_3).
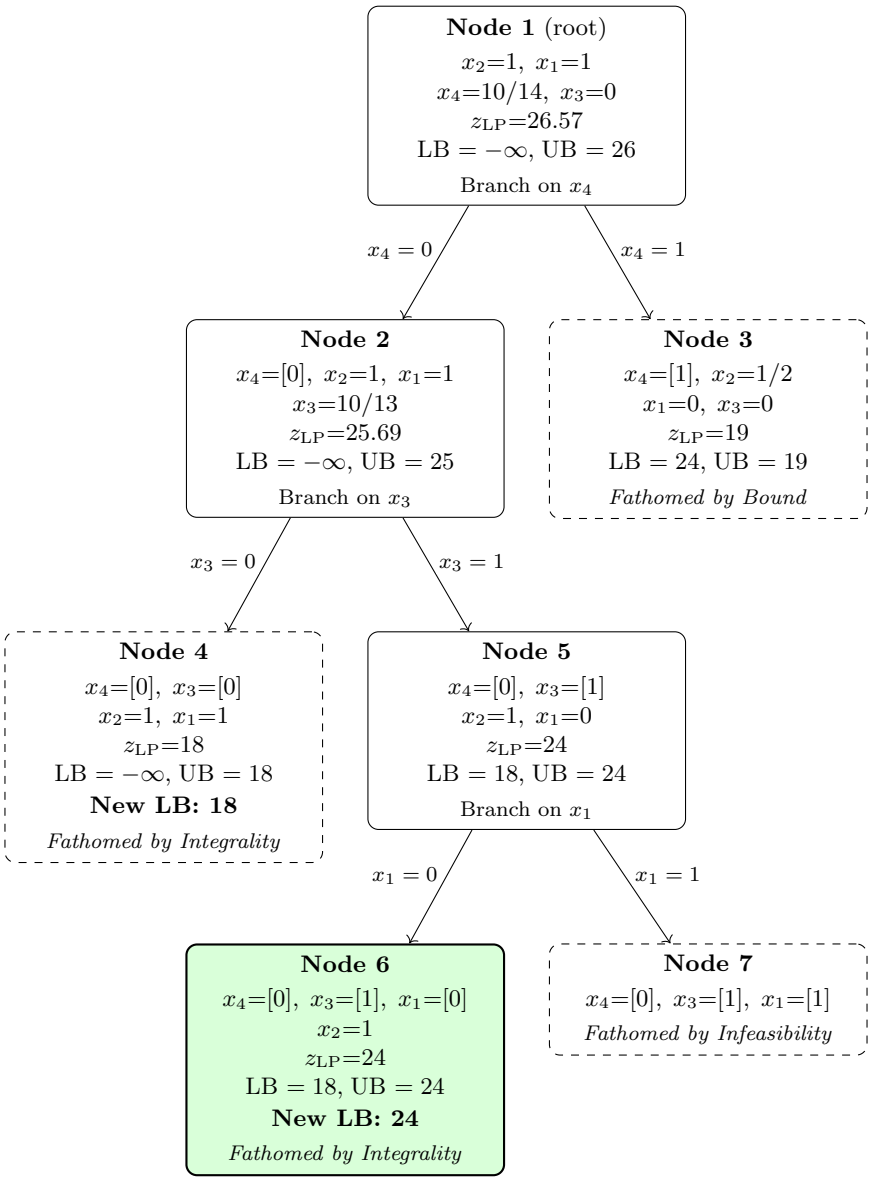
Branch-and-Bound Tree