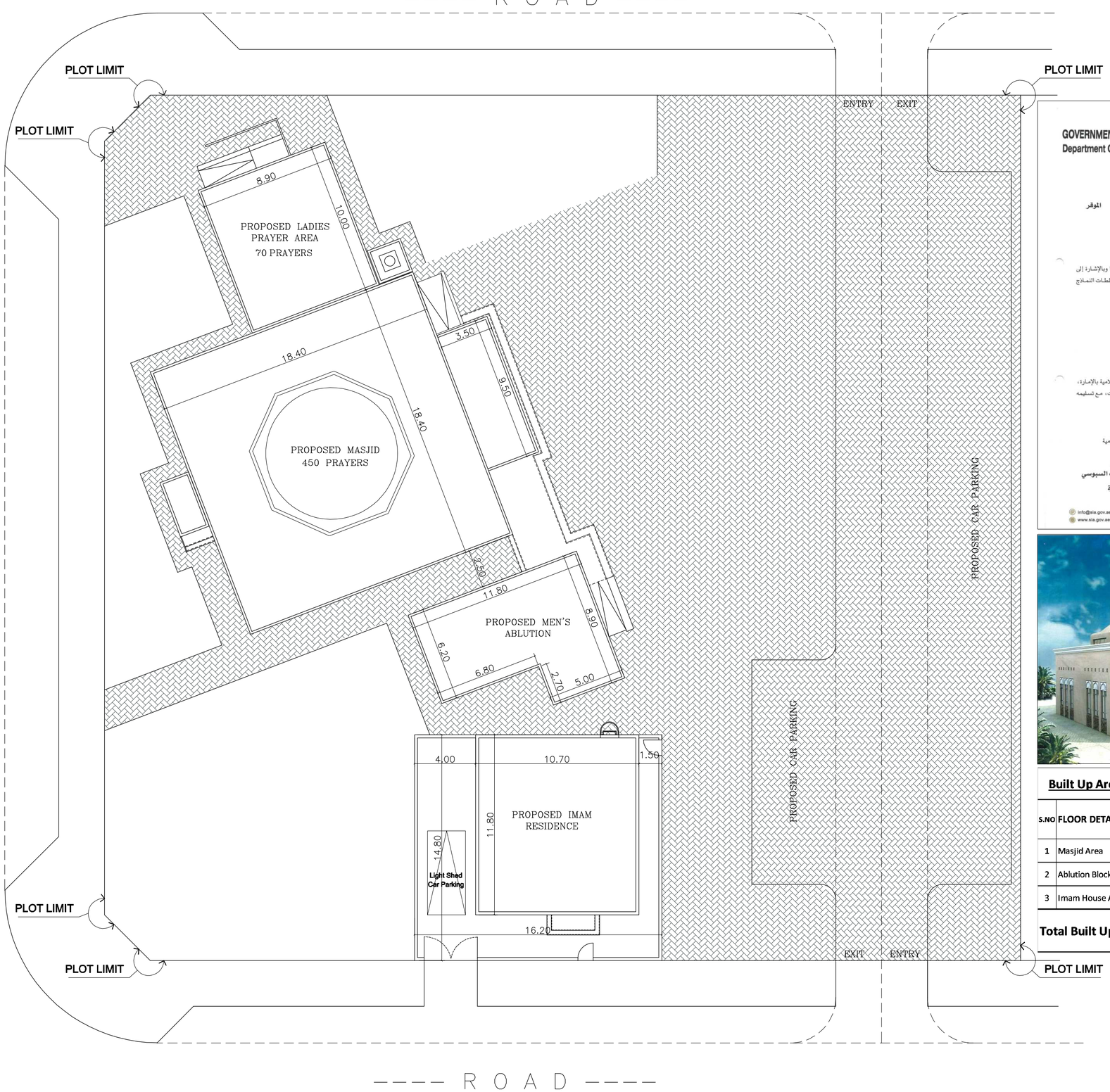

SETTING OUT PLAN

GOVERNMENT OF SHARJAH
Department Of Islamic Affairs

حكومة الشارقة
دائرة الشؤون الإسلامية

التاريخ: 16 ذوالقعدة 1442هـ
الموافق: 27 يونيو 2021م
المرجع: ميز/هـ/ 936 /2021

سعادة المهندس/ خالد بطي عبيد بن بجلي الموقر
رئيس دائرة التخطيط و المساحة

السلام عليكم ورحمة الله وبركاته، وبعد:

الموضوع / مخططات المساجد مسبقة الاعتماد

تهديكم الدائرة أطيب تحياتها وتمنياتها لكم بدوام التوفيق والسداد، هذا وبالإشارة إلى الموضوع أعلاه ، يرجى التكرم بالإيعاز إلى جهه الاختصاص لديكم باعتماد مخططات النماذج التالية:

م	اسم النموذج
1	SIA - SM-01
2	SIA - SM-02
3	SIA - SM-03
4	SIA - SM-04
5	SIA - SM-05
6	SIA - SM-06

وحيث أن هذه النماذج سيتم إستخدامها بشكل متكرر في مشاريع دائرة الشؤون الإسلامية بالإمارة، يرجى التفضل بإعفاء مكتب / الماسة للاستشارات الهندسية من رسوم إعتماد المخططات، مع تسليمه المخططات الأصلية المعتمدة من قبلكم. شاكرين لكم حسن تعاونكم معنا ،،،

لمزيد من الاستفسار يرجى الاتصال على :
المهندس / محمد عطية ، هاتف رقم 0558049138 –الماسة للاستشارات الهندسية.
المهندس/ عبدالله أبوبكر الياسي ، هاتف رقم 0551736666– دائرة الشؤون الإسلامية

وتفضلوا بقبول فائق الاحترام والتقدير،،،

عبدالله خليفة يعروف السبوسي
رئيس الدائرة

info@sia.gov.ae | Islamic_affairs | Fax: +971 6 5361101 برقي | Tel: +971 6 5055888 هاتف
www.sia.gov.ae | 056 1888 292 | P.O. Box: 1087 ص.ب | الرقم المجاني 800 17

Built Up Area Schedule

S.NO	FLOOR DETAILS	AREA SQ.M	AREA SQ.FT
1	Masjid Area	473.63	5096.31
2	Ablution Block Area	86.66	932.46
3	Imam House Area	126.26	1358.56
	Total Built Up Area	**686.55**	**7387.33**

GENERAL NOTES:

1. IT IS NOT ALLOWED TO REPRODUCE THE SHEETS CONTENTS IN ANY FORM EXCEPT FOR THE PURPOSE FOR WHICH IT IS INTENDED.
2. THESE DRAWINGS ARE DIAGRAMMATIC AND SHALL NOT BE SCALED. ADDITIONAL DATA SHALL BE REQUESTED FROM THE CONSULTANCY THROUGH WRITTEN CLARIFICATION. VERIFY ALL EXISTING CONDITIONS AND DIMENSIONS BEFORE PROCEEDING WITH ANY PORTION OF ANY WORK.
3. NO CHANGES, MODIFICATIONS OR DEVIATIONS SHALL BE WRITTEN PERMISSION FROM **ALMASAH ENGINEERING CONSULTANTS.**
4. ALL WORK AS OUTLINED IN THESE DOCUMENTS, SHALL STRICTLY CONFORM TO ALL APPLICABLE CODES. IN THE EVENT OF A CONFLICT, THE MORE STRINGENT REQUIREMENT SHALL GOVERN AND BE MET.

SIA - SM-01

حكومة الشارقة
دائرة الشؤون الإسلامية

CONSULTANT STAMP

الماسة للإستشارات الهندسية
مخططات فقط
AL-Masah
Engineering Consultant
Drawings Only

الماسة للإستشارات الهندسية
AL MASAH
Engineering Consultants
Sharjah 06 5 444 521 06 5 444 523 Office: 306, Al Fisal 2 Bldg., King Fisal St.

CLIENT:
GOVERNMENT OF SHARJAH - DEPARTMENT OF ISLAMIC AFFAIRS

PROJECT:
(SIA - SM-01)
PROPOSED MASJID + ABLUTION + IMAM HOUSE

SHEET TITLE:
SETTING OUT PLAN

ARCHITECT Arch. Mostafa Ramadan		TYPE	ARCHITECTURE
STRUCTURAL Eng : Mohamed Gomaa		SHEET No.	A - 01
CHECKED BY Eng : Mohamed Attia		Location :	
		Plot No :	
SCALE 1:100	DATE May - 2022	Project No.	

© ALL COPYRIGHTS IS RESERVED

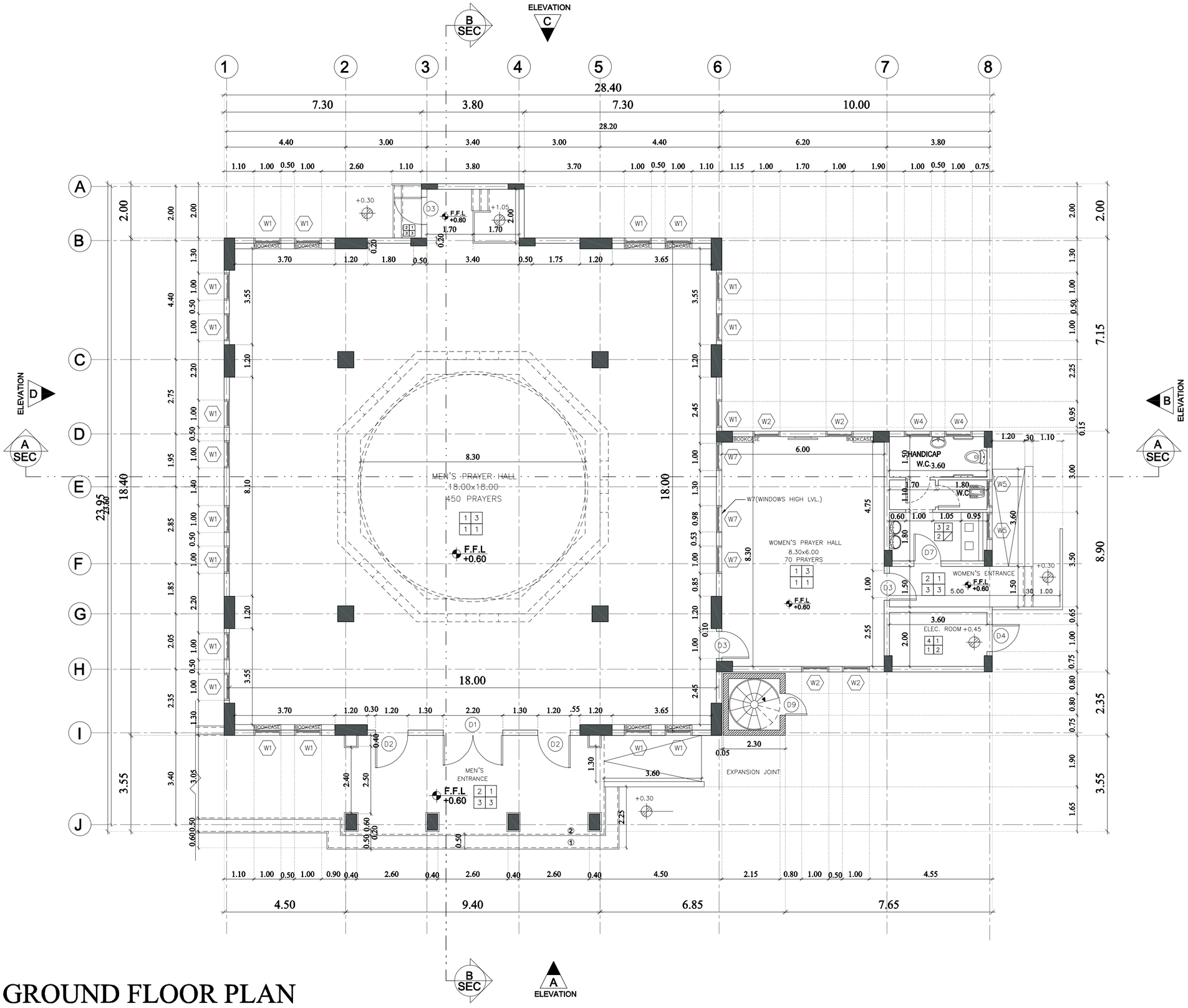

GROUND FLOOR PLAN

(SCALE = 1 : 100)

GENERAL NOTES:

1. IT IS NOT ALLOWED TO REPRODUCE THE SHEETS CONTENTS IN ANY FORM EXCEPT FOR THE PURPOSE FOR WHICH IT IS INTENDED.
2. THESE DRAWINGS ARE DIAGRAMMATIC AND SHALL NOT BE SCALED. ADDITIONAL DATA SHALL BE REQUESTED FROM THE CONSULTANCY THROUGH WRITTEN CLARIFICATION. VERIFY ALL EXISTING CONDITIONS AND DIMENSIONS BEFORE PROCEEDING WITH ANY PORTION OF ANY WORK.
3. NO CHANGES, MODIFICATIONS OR DEVIATIONS SHALL BE WRITTEN PERMISSION FROM **ALMASAH ENGINEERING CONSULTANTS.**
4. ALL WORK AS OUTLINED IN THESE DOCUMENTS, SHALL STRICTLY CONFORM TO ALL APPLICABLE CODES. IN THE EVENT OF A CONFLICT, THE MORE STRINGENT REQUIREMENT SHALL GOVERN AND BE MET.

قطاع الهندسة و المباني
إدارة تراخيص البناء
23/05/2022
Architectural
التوقيع

SIA - SM-01

حكومة الشارقة
دائرة الشؤون الإسلامية

CONSULTANT STAMP

الماسة للإستشارات الهندسية
مخططات فقط
AL-Masah
Engineering Consultant
Drawings Only

الماسة للإستشارات الهندسية
AL MASAH
Engineering Consultants
Sharjah 06 5 444 521 06 5 444 523 Office: 306, Al Fisal 2 Bldg., King Fisal St.

CLIENT:	GOVERNMENT OF SHARJAH - DEPARTMENT OF ISLAMIC AFFAIRS
PROJECT:	(SIA - SM-01) PROPOSED MASJID + ABLUTION + IMAM HOUSE
SHEET TITLE:	GROUND FLOOR PLAN

ARCHITECT Arch. Mostafa Ramadan		TYPE	ARCHITECTURE
STRUCTURAL Eng : Mohamed Gomaa		SHEET No.	A - 02
CHECKED BY Eng : Mohamed Attia		Location :	
		Plot No :	
SCALE 1:100	DATE May - 2022	Project No.	

© ALL COPYRIGHTS IS RESERVED

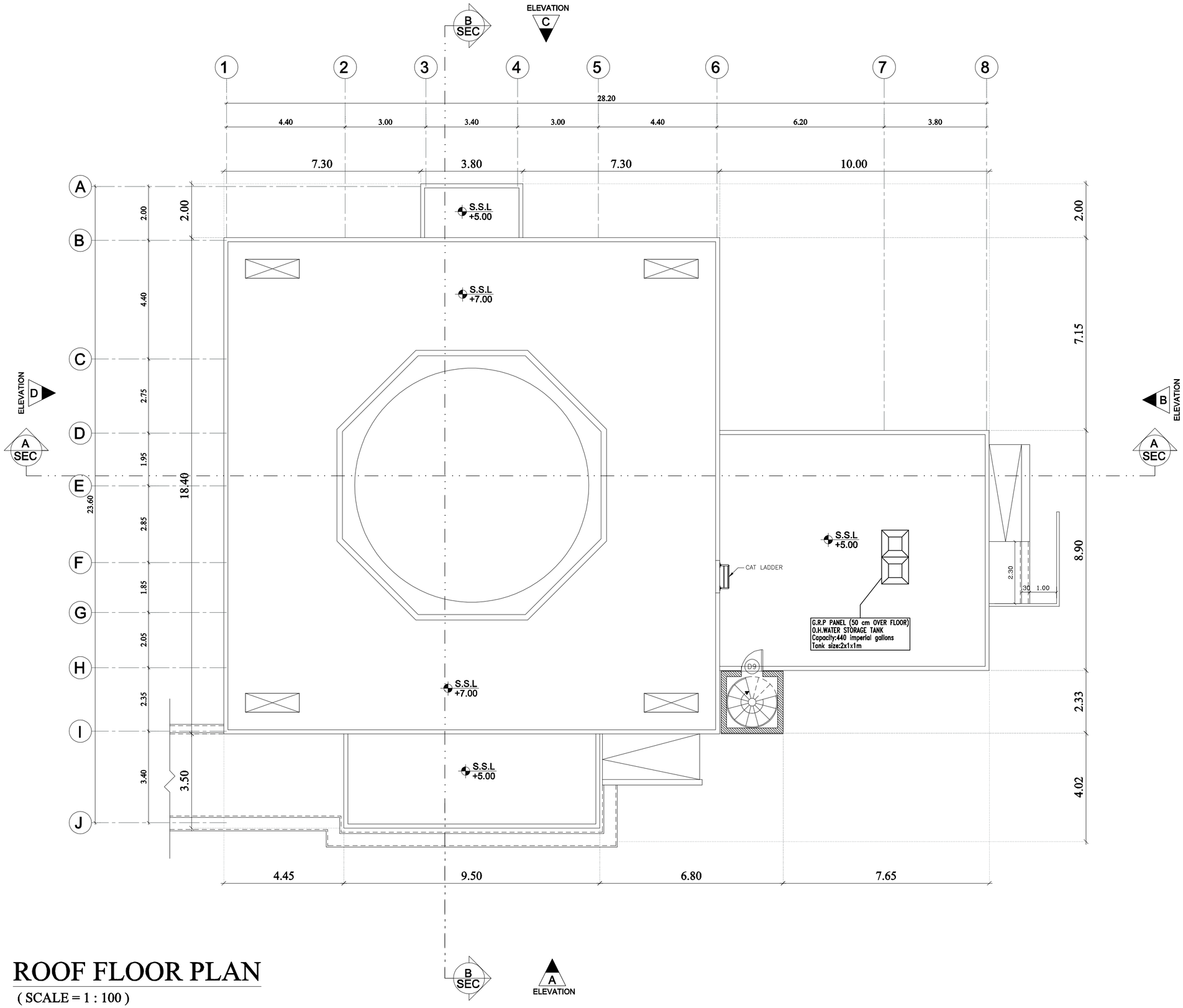

ROOF FLOOR PLAN

(SCALE = 1 : 100)

GENERAL NOTES:

1. IT IS NOT ALLOWED TO REPRODUCE THE SHEETS CONTENTS IN ANY FORM EXCEPT FOR THE PURPOSE FOR WHICH IT IS INTENDED.
2. THESE DRAWINGS ARE DIAGRAMMATIC AND SHALL NOT BE SCALED. ADDITIONAL DATA SHALL BE REQUESTED FROM THE CONSULTANCY THROUGH WRITTEN CLARIFICATION. VERIFY ALL EXISTING CONDITIONS AND DIMENSIONS BEFORE PROCEEDING WITH ANY PORTION OF ANY WORK.
3. NO CHANGES, MODIFICATIONS OR DEVIATIONS SHALL BE WRITTEN PERMISSION FROM **ALMASAH ENGINEERING CONSULTANTS.**
4. ALL WORK AS OUTLINED IN THESE DOCUMENTS, SHALL STRICTLY CONFORM TO ALL APPLICABLE CODES. IN THE EVENT OF A CONFLICT, THE MORE STRINGENT REQUIREMENT SHALL GOVERN AND BE MET.

قطاع الهندسة و المباني
إدارة تراخيص البناء
23/05/2022
Architectural Approved
التوقيع

SIA - SM-01

حكومة الشارقة
دائرة الشؤون الإسلامية

CONSULTANT STAMP

الماسة للإستشارات الهندسية
مخططات فقط
AL-Masah
Engineering Consultant
Drawings Only

الماسة للإستشارات الهندسية
AL MASAH
Engineering Consultants
Sharjah 06 5 444 521 06 5 444 523 Office: 306, Al Fisal 2 Bldg., King Fisal St.

CLIENT:
GOVERNMENT OF SHARJAH - DEPARTMENT OF ISLAMIC AFFAIRS

PROJECT:
(SIA - SM-01)
PROPOSED MASJID + ABLUTION + IMAM HOUSE

SHEET TITLE:
ROOF FLOOR PLAN

ARCHITECT Arch. Mostafa Ramadan		TYPE	ARCHITECTURE
STRUCTURAL Eng : Mohamed Gomaa		SHEET No.	A - 03
CHECKED BY Eng : Mohamed Attia		Location :	
		Plot No :	
SCALE 1:100	DATE May - 2022	Project No.	

© ALL COPYRIGHTS IS RESERVED

ELEVATION FINISHES

1- REFLECTIVE GLASS
2- GRAFFIO DECOR WHITE PAINT OR STONE CLADDING
3- GRAFFIO DECOR OFF WHITE PAINT OR STONE CLADDING
4- GRANITE FINISHING
5- G.R.C.

ALL WINDOWS & BALCONY DOORS SHOULD BE EQUIPED WITH WINDOWS OPENING CONTROL DEVICE (W.O.C.D.) TO LIMITS THE OPENING LESS THAN 10 CM TO HAVE MAXIMUM OPENING LIMIT OF 10 CM TO HELP IN THE PREVENTION OF ACCIDENTAL FALLS FROM WINDOWS & BALCONIES BY CHILDREN AS PER SHARJAH MUNICIPALITY REGULATIONS.

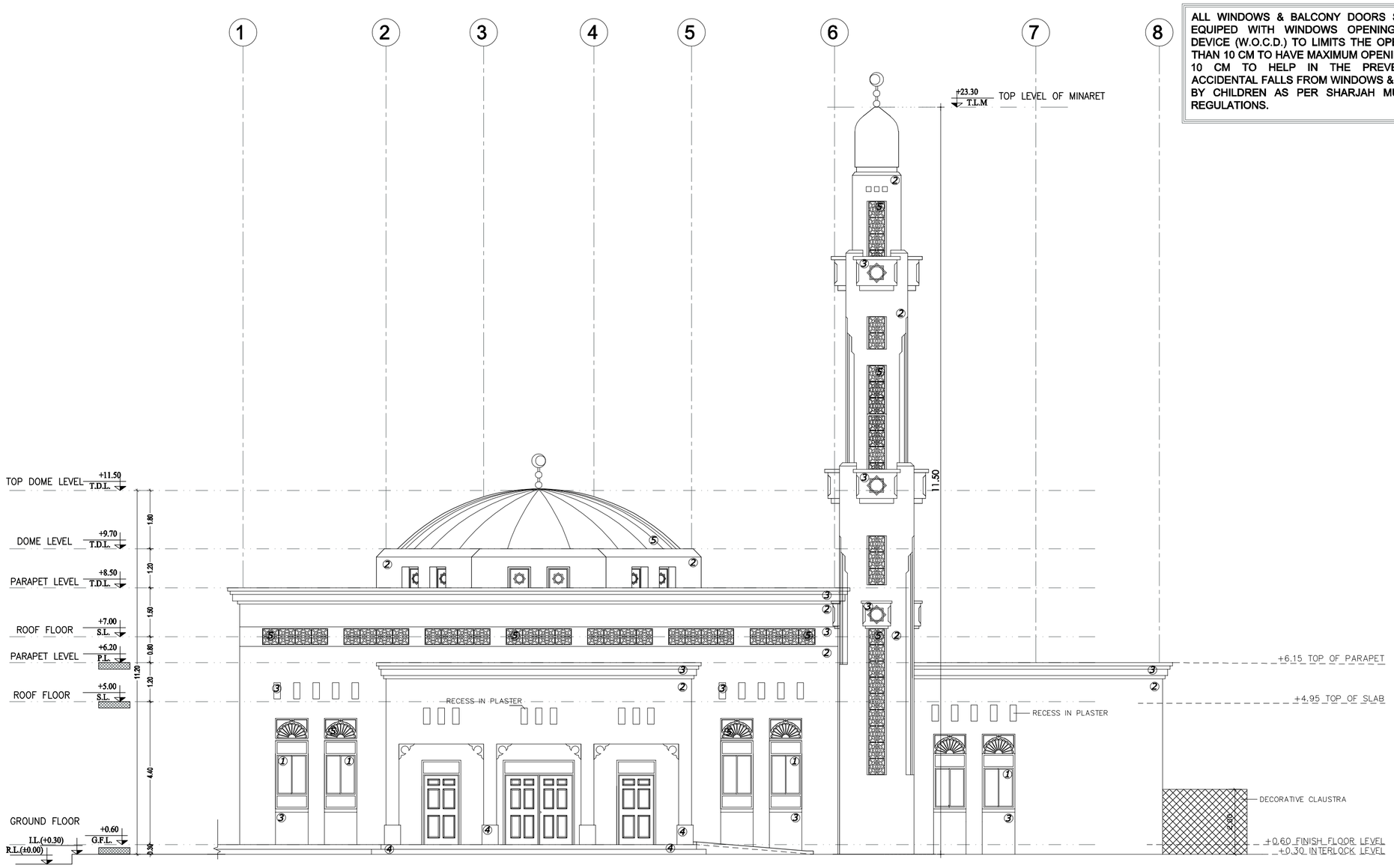

ELEVATION -A

(SCALE = 1 : 100)

GENERAL NOTES:

1.IT IS NOT ALLOWED TO REPRODUCE THE SHEETS CONTENTS IN ANY FORM EXCEPT FOR THE PURPOSE FOR WHICH IT IS INTENDED.
2. THESE DRAWINGS ARE DIAGRAMMATIC AND SHALL NOT BE SCALED. ADDITIONAL DATA SHALL BE REQUESTED FROM THE CONSULTANCY THROUGH WRITTEN CLARIFICATION. VERIFY ALL EXISTING CONDITIONS AND DIMENSIONS BEFORE PROCEEDING WITH ANY PORTION OF ANY WORK.
3. NO CHANGES, MODIFICATIONS OR DEVIATIONS SHALL BE WRITTEN PERMISSION FROM **ALMASAH ENGINEERING CONSULTANTS.**
4. ALL WORK AS OUTLINED IN THESE DOCUMENTS, SHALL STRICTLY CONFORM TO ALL APPLICABLE CODES. IN THE EVENT OF A CONFLICT, THE MORE STRINGENT REQUIREMENT SHALL GOVERN AND BE MET.

قطاع الهندسة و المباني
إدارة تراخيص البناء
23/05/2022
Architectural Approved
التوقيع

SIA - SM-01

حكومة الشارقة
دائرة الشؤون الإسلامية

CONSULTANT STAMP

المآسة للإستشارات الهندسية
مكاتب فقط
AL-Masah
Engineering Consultant
Drawings Only

المآسة للإستشارات الهندسية
AL MASAH
Engineering Consultants
Sharjah 06 5 444 521 06 5 444 523 Office: 306, Al Fisal 2 Bldg., King Fisal St.

CLIENT: GOVERNMENT OF SHARJAH - DEPARTMENT OF ISLAMIC AFFAIRS			
PROJECT: (SIA - SM-01) PROPOSED MASJID + ABLUTION + IMAM HOUSE			
SHEET TITLE: ELEVATION -A			
ARCHITECT Arch. Mostafa Ramadan		TYPE	ARCHITECTURE
STRUCTURAL Eng : Mohamed Gomaa		SHEET No.	A - 04
CHECKED BY Eng : Mohamed Attia		Location :	
		Plot No :	
SCALE 1:100	DATE May - 2022	Project No.	

© ALL COPYRIGHTS IS RESERVED

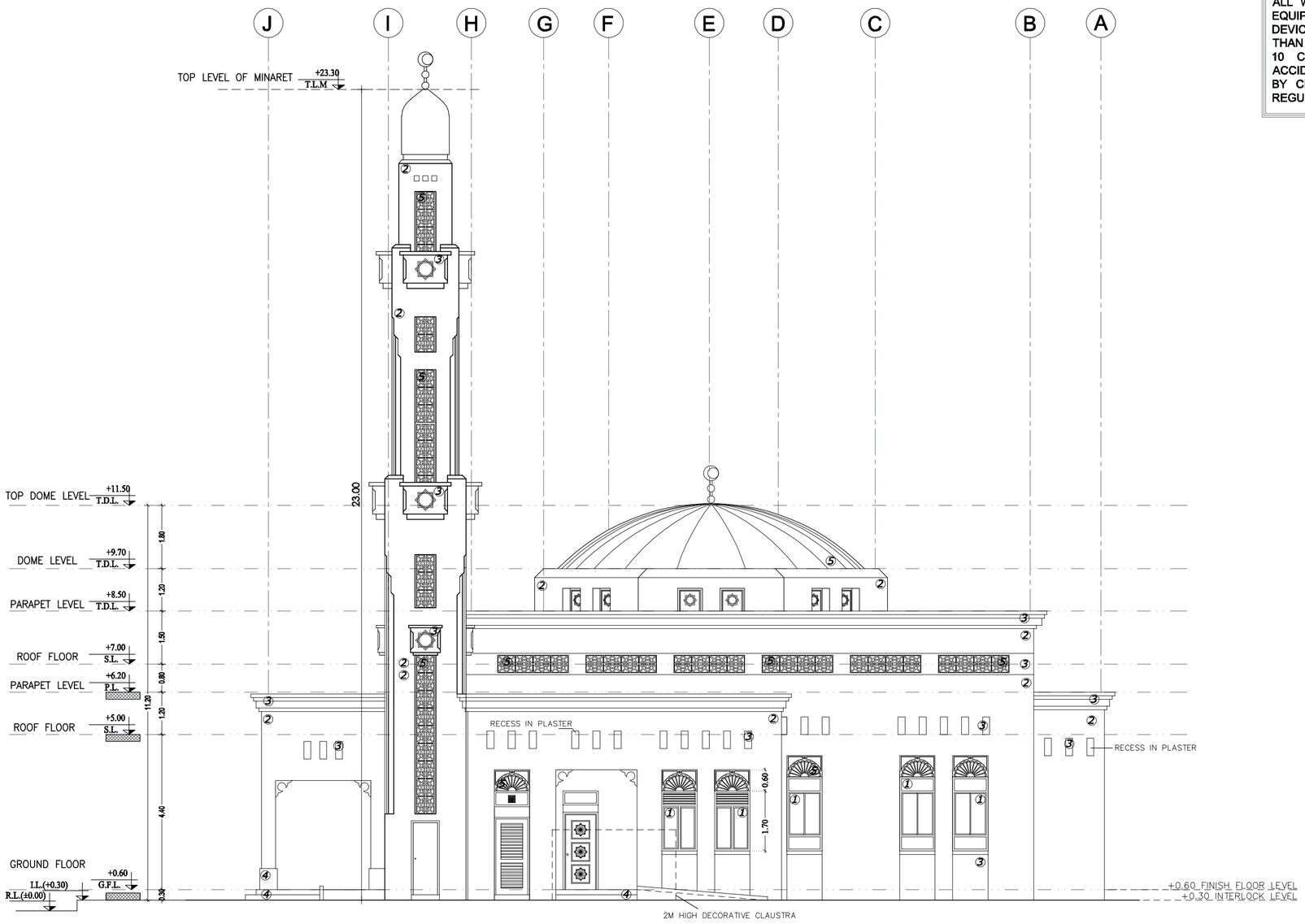

ELEVATION - B

(SCALE = 1 : 100)

ELEVATION FINISHES

1- REFLECTIVE GLASS
2- GRAFFIO DECOR WHITE PAINT OR STONE CLADDING
3- GRAFFIO DECOR OFF WHITE PAINT OR STONE CLADDING
4- GRANITE FINISHING
5- G.R.C.

ALL WINDOWS & BALCONY DOORS SHOULD BE EQUIPED WITH WINDOWS OPENING CONTROL DEVICE (W.O.C.D.) TO LIMITS THE OPENING LESS THAN 10 CM TO HAVE MAXIMUM OPENING LIMIT OF 10 CM TO HELP IN THE PREVENTION OF ACCIDENTAL FALLS FROM WINDOWS & BALCONIES BY CHILDREN AS PER SHARJAH MUNICIPALITY REGULATIONS.

GENERAL NOTES:

1.IT IS NOT ALLOWED TO REPRODUCE THE SHEETS CONTENTS IN ANY FORM EXCEPT FOR THE PURPOSE FOR WHICH IT IS INTENDED.
2. THESE DRAWINGS ARE DIAGRAMMATIC AND SHALL NOT BE SCALED. ADDITIONAL DATA SHALL BE REQUESTED FROM THE CONSULTANCY THROUGH WRITTEN CLARIFICATION. VERIFY ALL EXISTING CONDITIONS AND DIMENSIONS BEFORE PROCEEDING WITH ANY PORTION OF ANY WORK.
3. NO CHANGES, MODIFICATIONS OR DEVIATIONS SHALL BE WRITTEN PERMISSION FROM **ALMASAH ENGINEERING CONSULTANTS.**
4. ALL WORK AS OUTLINED IN THESE DOCUMENTS, SHALL STRICTLY CONFORM TO ALL APPLICABLE CODES. IN THE EVENT OF A CONFLICT, THE MORE STRINGENT REQUIREMENT SHALL GOVERN AND BE MET.

قطاع الهندسة و المباني
إدارة تراخيص البناء
23/05/2022
Architectural Approved
التوقيع

SIA - SM-01

حكومة الشارقة
دائرة الشؤون الإسلامية

CONSULTANT STAMP

المـاسـة للإستشارات الهندسية
مخططات فقط
AL-Masah
Engineering Consultant
Drawings Only

المـاسـة للإستشارات الهندسية
AL MASAH
Engineering Consultants
Sharjah 06 5 444 521 06 5 444 523 Office: 306, Al Fisal 2 Bldg., King Fisal St.

CLIENT:
GOVERNMENT OF SHARJAH - DEPARTMENT OF ISLAMIC AFFAIRS

PROJECT:
(SIA - SM-01)
PROPOSED MASJID + ABLUTION + IMAM HOUSE

SHEET TITLE:
ELEVATION -B

ARCHITECT Arch. Mostafa Ramadan	TYPE	ARCHITECTURE
STRUCTURAL Eng : Mohamed Gomaa	SHEET No.	A - 05
CHECKED BY Eng : Mohamed Attia	Location :	
	Plot No :	
SCALE 1:100 / DATE May - 2022	Project No.	

© ALL COPYRIGHTS IS RESERVED

ELEVATION FINISHES

1- REFLECTIVE GLASS
2- GRAFFIO DECOR WHITE PAINT OR STONE CLADDING
3- GRAFFIO DECOR OFF WHITE PAINT OR STONE CLADDING
4- GRANITE FINISHING
5- G.R.C.

ALL WINDOWS & BALCONY DOORS SHOULD BE EQUIPED WITH WINDOWS OPENING CONTROL DEVICE (W.O.C.D.) TO LIMITS THE OPENING LESS THAN 10 CM TO HAVE MAXIMUM OPENING LIMIT OF 10 CM TO HELP IN THE PREVENTION OF ACCIDENTAL FALLS FROM WINDOWS & BALCONIES BY CHILDREN AS PER SHARJAH MUNICIPALITY REGULATIONS.

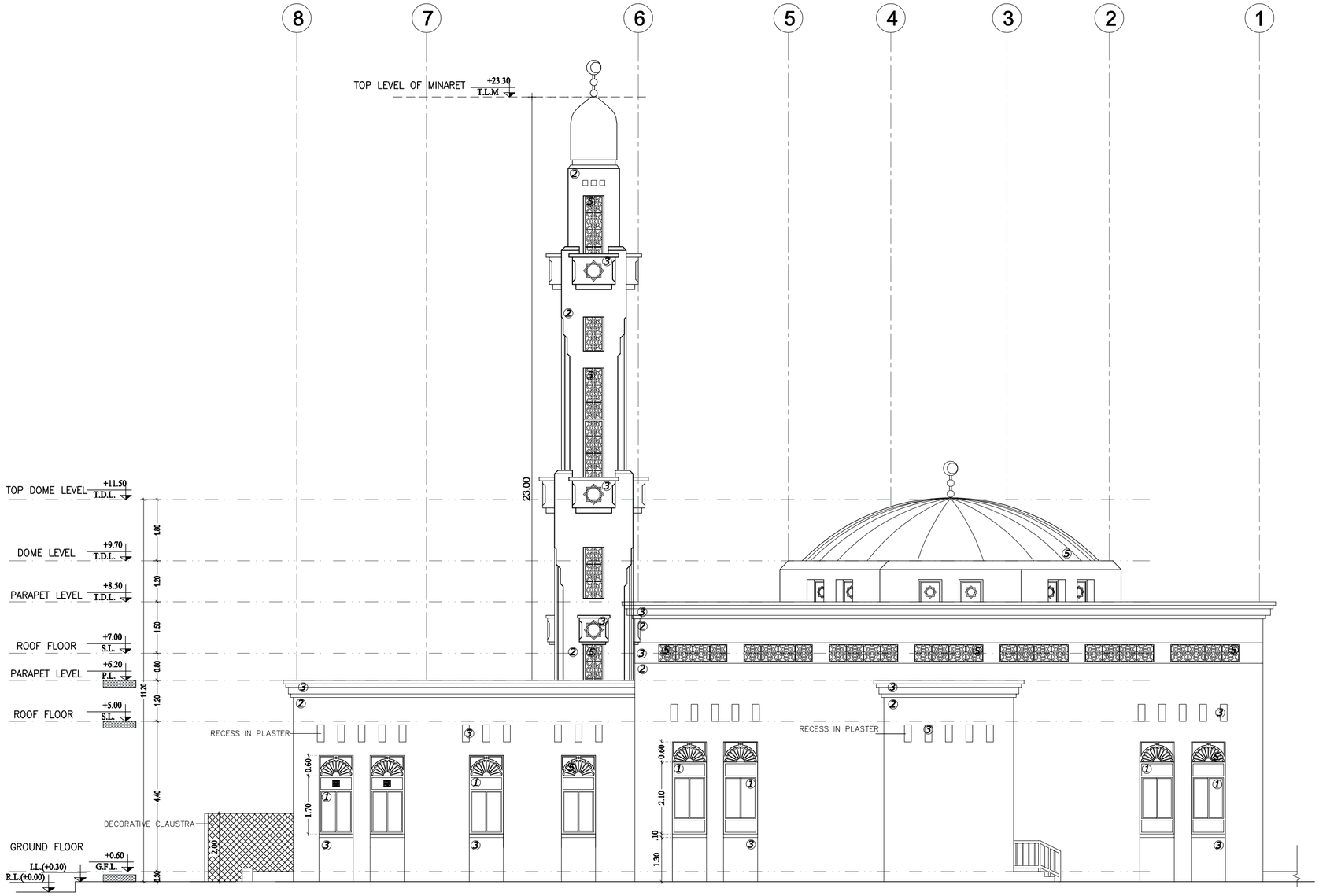

ELEVATION - C

(SCALE = 1 : 100)

GENERAL NOTES:

1.IT IS NOT ALLOWED TO REPRODUCE THE SHEETS CONTENTS IN ANY FORM EXCEPT FOR THE PURPOSE FOR WHICH IT IS INTENDED.
2. THESE DRAWINGS ARE DIAGRAMMATIC AND SHALL NOT BE SCALED. ADDITIONAL DATA SHALL BE REQUESTED FROM THE CONSULTANCY THROUGH WRITTEN CLARIFICATION. VERIFY ALL EXISTING CONDITIONS AND DIMENSIONS BEFORE PROCEEDING WITH ANY PORTION OF ANY WORK.
3. NO CHANGES, MODIFICATIONS OR DEVIATIONS SHALL BE WRITTEN PERMISSION FROM **ALMASAH ENGINEERING CONSULTANTS.**
4. ALL WORK AS OUTLINED IN THESE DOCUMENTS, SHALL STRICTLY CONFORM TO ALL APPLICABLE CODES. IN THE EVENT OF A CONFLICT, THE MORE STRINGENT REQUIREMENT SHALL GOVERN AND BE MET.

قطاع الهندسة والمباني
إدارة تراخيص البناء
23/05/2022
Architectural Approved
التوقيع

SIA - SM-01

حكومة الشارقة
دائرة الشؤون الإسلامية

CONSULTANT STAMP

المآسة للإستشارات الهندسية
مخططات فقط
AL-Masah Engineering Consultant
Drawings Only

المآسة للإستشارات الهندسية
AL MASAH Engineering Consultants
Sharjah 06 5 444 521 06 5 444 523 Office: 306, Al Fisal 2 Bldg., King Fisal St.

CLIENT: GOVERNMENT OF SHARJAH - DEPARTMENT OF ISLAMIC AFFAIRS			
PROJECT: (SIA - SM-01) PROPOSED MASJID + ABLUTION + IMAM HOUSE			
SHEET TITLE: ELEVATION -C			
ARCHITECT Arch. Mostafa Ramadan		TYPE	ARCHITECTURE
STRUCTURAL Eng : Mohamed Gomaa		SHEET No.	A - 06
CHECKED BY Eng : Mohamed Attia		Location :	
		Plot No :	
SCALE 1:100	DATE May - 2022	Project No.	

© ALL COPYRIGHTS IS RESERVED

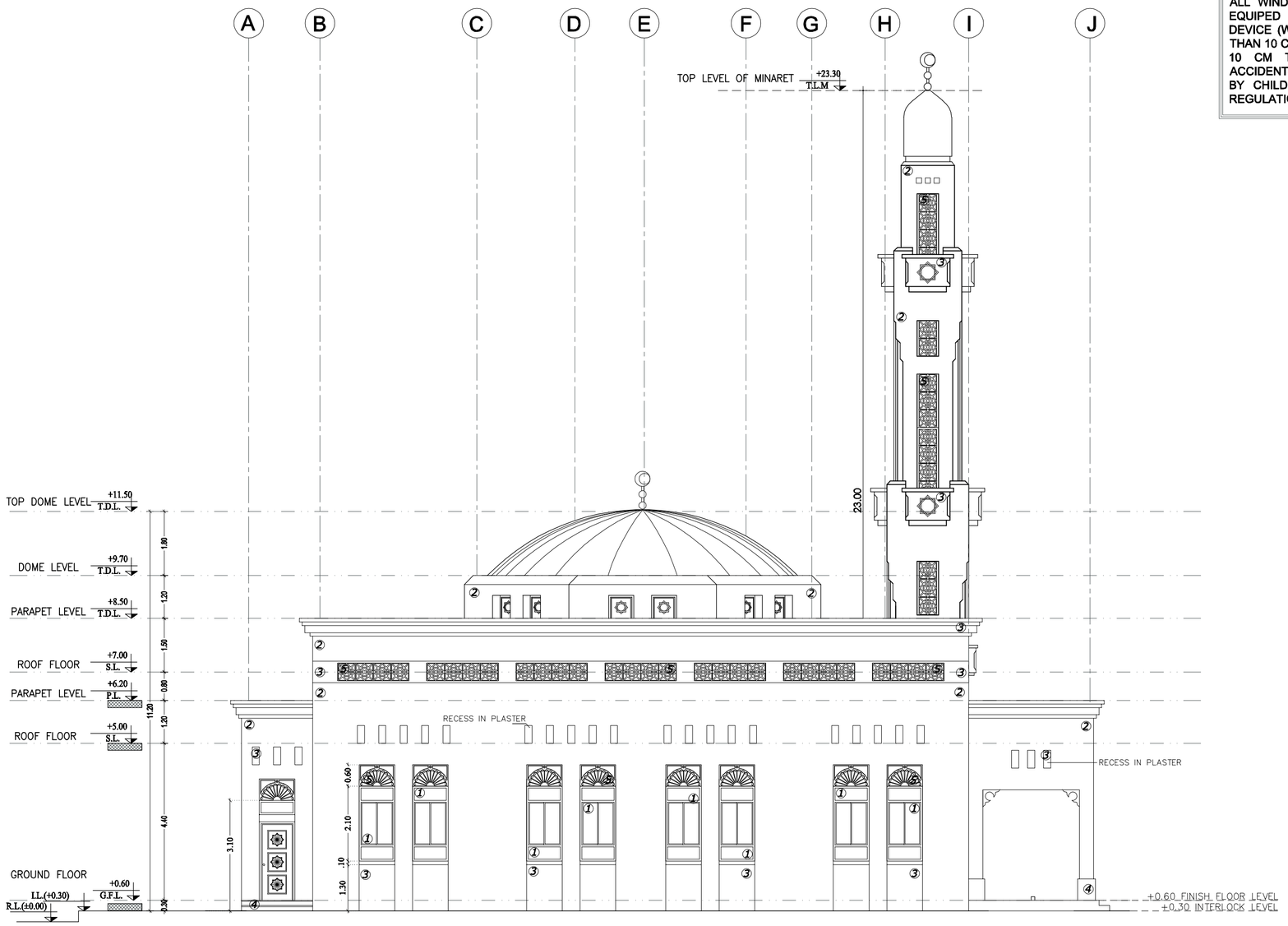

SECTION D

(SCALE = 1 : 100)

ELEVATION FINISHES

1- REFLECTIVE GLASS
2- GRAFFIO DECOR WHITE PAINT OR STONE CLADDING
3- GRAFFIO DECOR OFF WHITE PAINT OR STONE CLADDING
4- GRANITE FINISHING
5- G.R.C.

ALL WINDOWS & BALCONY DOORS SHOULD BE EQUIPED WITH WINDOWS OPENING CONTROL DEVICE (W.O.C.D.) TO LIMITS THE OPENING LESS THAN 10 CM TO HAVE MAXIMUM OPENING LIMIT OF 10 CM TO HELP IN THE PREVENTION OF ACCIDENTAL FALLS FROM WINDOWS & BALCONIES BY CHILDREN AS PER SHARJAH MUNICIPALITY REGULATIONS.

GENERAL NOTES:

1.IT IS NOT ALLOWED TO REPRODUCE THE SHEETS CONTENTS IN ANY FORM EXCEPT FOR THE PURPOSE FOR WHICH IT IS INTENDED.
2. THESE DRAWINGS ARE DIAGRAMMATIC AND SHALL NOT BE SCALED. ADDITIONAL DATA SHALL BE REQUESTED FROM THE CONSULTANCY THROUGH WRITTEN CLARIFICATION. VERIFY ALL EXISTING CONDITIONS AND DIMENSIONS BEFORE PROCEEDING WITH ANY PORTION OF ANY WORK.
3. NO CHANGES, MODIFICATIONS OR DEVIATIONS SHALL BE WRITTEN PERMISSION FROM **ALMASAH ENGINEERING CONSULTANTS.**
4. ALL WORK AS OUTLINED IN THESE DOCUMENTS, SHALL STRICTLY CONFORM TO ALL APPLICABLE CODES. IN THE EVENT OF A CONFLICT, THE MORE STRINGENT REQUIREMENT SHALL GOVERN AND BE MET.

قطاع الهندسة والمباني
إدارة تراخيص البناء
23/05/2022
Architectural Approved
التوقيع

SIA - SM-01

حكومة الشارقة
دائرة الشؤون الإسلامية

CONSULTANT STAMP

المساسة للإستشارات الهندسية
مخططات فقط
AL-Masah
Engineering Consultant
Drawings Only

المساسة للإستشارات الهندسية
AL MASAH
Engineering Consultants
Sharjah 06 5 444 521 06 5 444 523 Office: 306, Al Fisal 2 Bldg., King Fisal St.

CLIENT: GOVERNMENT OF SHARJAH - DEPARTMENT OF ISLAMIC AFFAIRS			
PROJECT: (SIA - SM-01) PROPOSED MASJID + ABLUTION + IMAM HOUSE			
SHEET TITLE: ELEVATION -D			
ARCHITECT Arch. Mostafa Ramadan		TYPE	ARCHITECTURE
STRUCTURAL Eng : Mohamed Gomaa		SHEET No.	A - 07
CHECKED BY Eng : Mohamed Attia		Location :	
		Plot No :	
SCALE 1:100	DATE May - 2022	Project No.	

© ALL COPYRIGHTS IS RESERVED

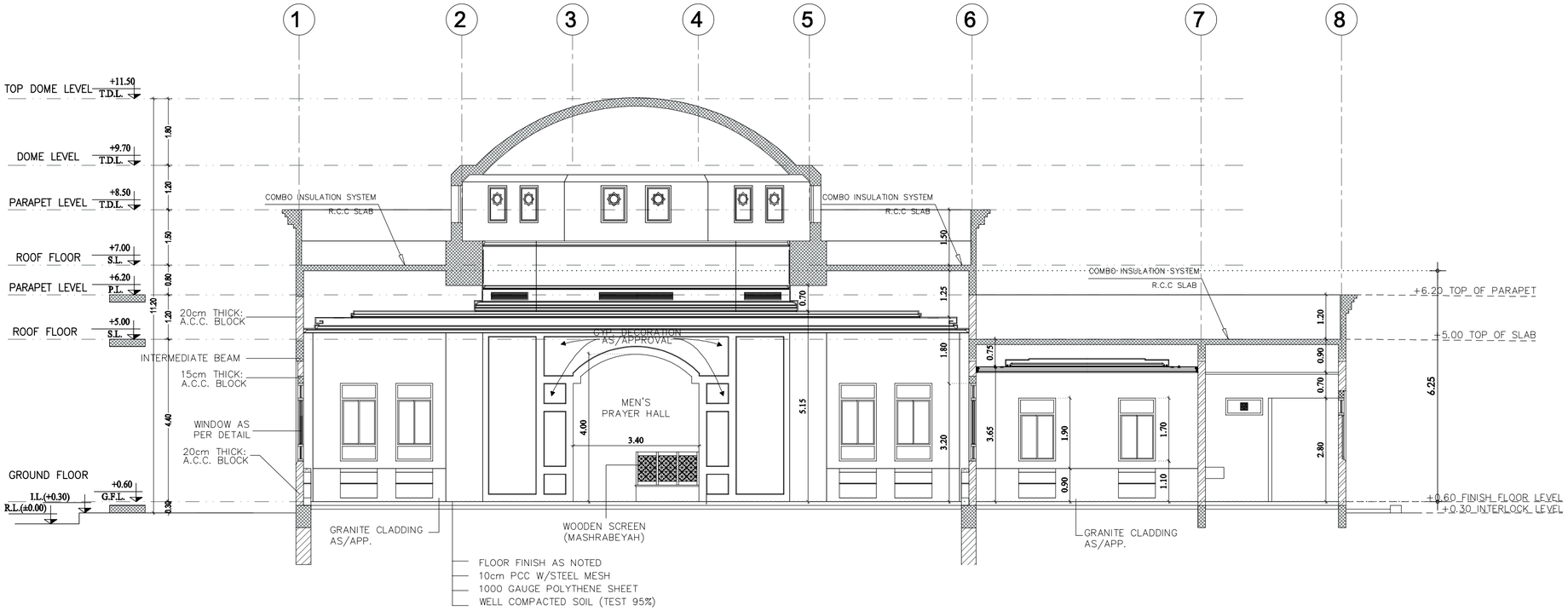

SECTION A-A

(SCALE = 1 : 100)

GENERAL NOTES:

1. IT IS NOT ALLOWED TO REPRODUCE THE SHEETS CONTENTS IN ANY FORM EXCEPT FOR THE PURPOSE FOR WHICH IT IS INTENDED.
2. THESE DRAWINGS ARE DIAGRAMMATIC AND SHALL NOT BE SCALED. ADDITIONAL DATA SHALL BE REQUESTED FROM THE CONSULTANCY THROUGH WRITTEN CLARIFICATION. VERIFY ALL EXISTING CONDITIONS AND DIMENSIONS BEFORE PROCEEDING WITH ANY PORTION OF ANY WORK.
3. NO CHANGES, MODIFICATIONS OR DEVIATIONS SHALL BE WRITTEN PERMISSION FROM **ALMASAH ENGINEERING CONSULTANTS.**
4. ALL WORK AS OUTLINED IN THESE DOCUMENTS, SHALL STRICTLY CONFORM TO ALL APPLICABLE CODES. IN THE EVENT OF A CONFLICT, THE MORE STRINGENT REQUIREMENT SHALL GOVERN AND BE MET.

قطاع الهندسة والمباني
إدارة تراخيص البناء
Archit 23/05/2022

SIA - SM-01

حكومة الشارقة
دائرة الشؤون الإسلامية

CONSULTANT STAMP

المـاسـة للإستشارات الهندسية
مكاتب فقط
AL-Masah Engineering Consultant
Drawings Only

* NOTES :.

1- ALL EXTERNAL WALLS TO BE 20.cm THERMAL BLOCK.
2- WINDOWS TO BE DOUBLE REFLECTIVE GLASS

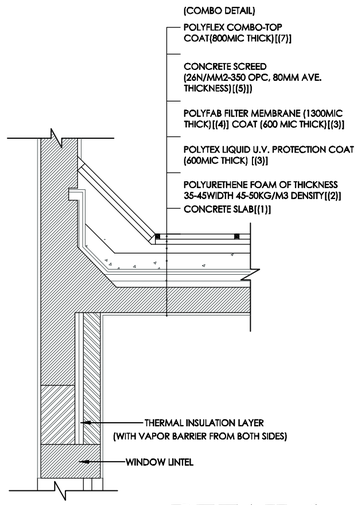

DETAIL 1

(SCALE = 1 : 25)

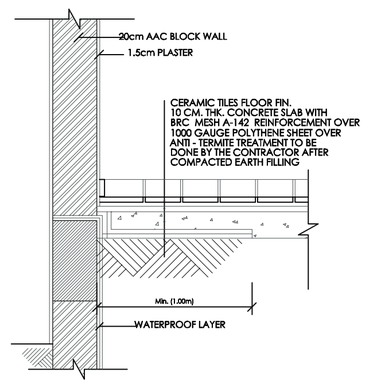

DETAIL 2

(SCALE = 1 : 25)

المـاسـة للإستشارات الهندسية
AL MASAH Engineering Consultants
Sharjah 06 5 444 521 06 5 444 523 Office: 306, Al Fisal 2 Bldg., King Fisal St.

CLIENT: GOVERNMENT OF SHARJAH - DEPARTMENT OF ISLAMIC AFFAIRS			
PROJECT: (SIA - SM-01) PROPOSED MASJID + ABLUTION + IMAM HOUSE			
SHEET TITLE: SECTIONS			
ARCHITECT Arch. Mostafa Ramadan		TYPE	ARCHITECTURE
STRUCTURAL Eng : Mohamed Gomaa		SHEET No.	A - 08
CHECKED BY Eng : Mohamed Attia		Location :	
		Plot No :	
SCALE 1:100	DATE May - 2022	Project No.	

© ALL COPYRIGHTS IS RESERVED

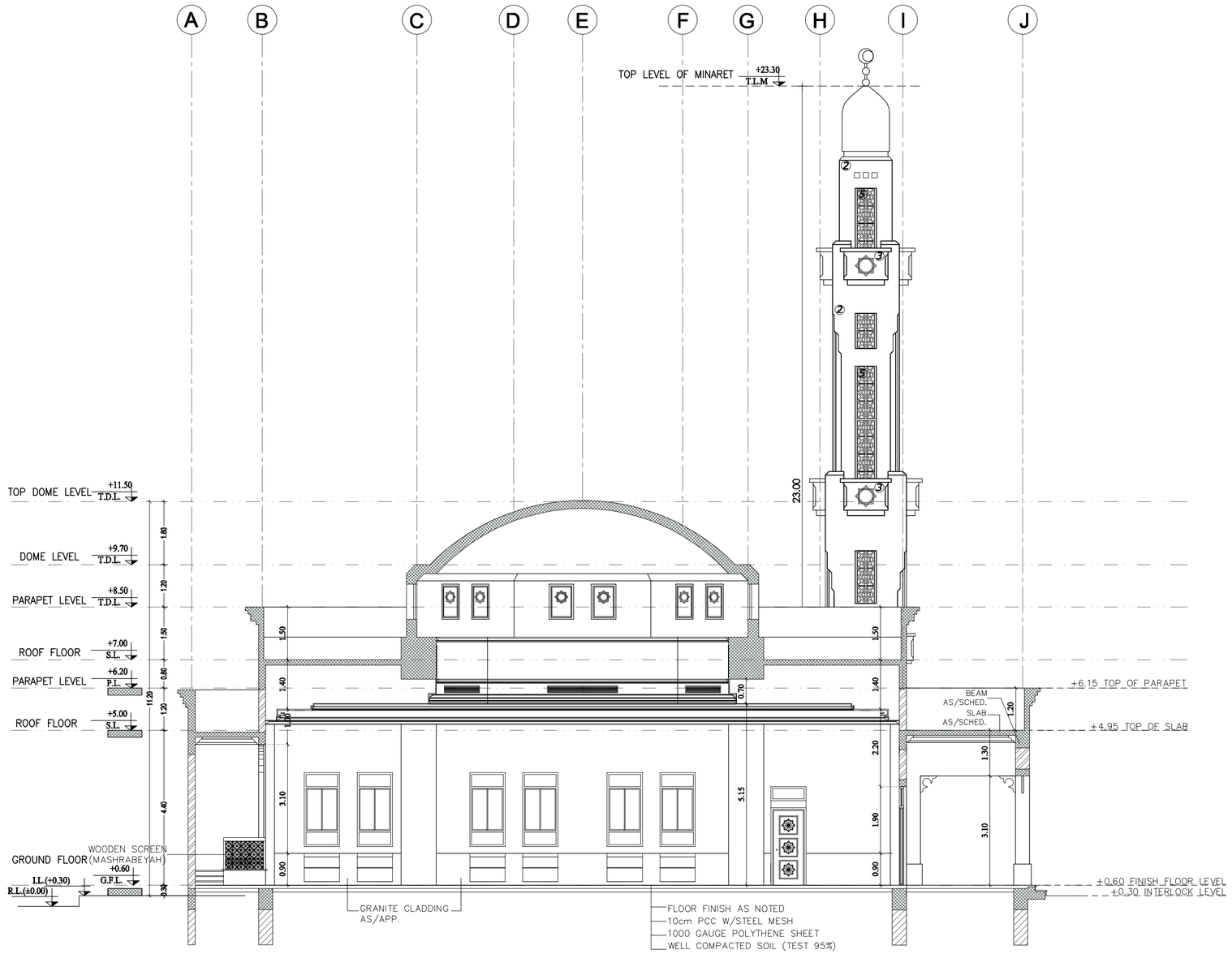

SECTION B-B

(SCALE = 1 : 100)

*** NOTES :.**

1- ALL EXTERNAL WALLS TO BE 20.cm THERMAL BLOCK.

2- WINDOWS TO BE DOUBLE REFLECTIVE GLASS

GENERAL NOTES:

1.IT IS NOT ALLOWED TO REPRODUCE THE SHEETS CONTENTS IN ANY FORM EXCEPT FOR THE PURPOSE FOR WHICH IT IS INTENDED.

2. THESE DRAWINGS ARE DIAGRAMMATIC AND SHALL NOT BE SCALED. ADDITIONAL DATA SHALL BE REQUESTED FROM THE CONSULTANCY THROUGH WRITTEN CLARIFICATION. VERIFY ALL EXISTING CONDITIONS AND DIMENSIONS BEFORE PROCEEDING WITH ANY PORTION OF ANY WORK.

3. NO CHANGES, MODIFICATIONS OR DEVIATIONS SHALL BE WRITTEN PERMISSION FROM **ALMASAH ENGINEERING CONSULTANTS.**

4. ALL WORK AS OUTLINED IN THESE DOCUMENTS, SHALL STRICTLY CONFORM TO ALL APPLICABLE CODES. IN THE EVENT OF A CONFLICT, THE MORE STRINGENT REQUIREMENT SHALL GOVERN AND BE MET.

قطاع الهندسة والمباني
إدارة تراخيص البناء
23/05/2022
Architectural Approved
التوقيع

SIA - SM-01

حكومة الشارقة
دائرة الشؤون الإسلامية

CONSULTANT STAMP

الماسة للإستشارات الهندسية
AL-Masah Engineering Consultant
Drawings Only

الماسة للإستشارات الهندسية
AL MASAH Engineering Consultants
Sharjah 06 5 444 521 06 5 444 523 Office: 306, Al Fisal 2 Bldg., King Fisal St.

CLIENT:
GOVERNMENT OF SHARJAH - DEPARTMENT OF ISLAMIC AFFAIRS

PROJECT:
(SIA - SM-01)
PROPOSED MASJID + ABLUTION + IMAM HOUSE

SHEET TITLE:
SECTIONS

ARCHITECT Arch. Mostafa Ramadan	TYPE	ARCHITECTURE
STRUCTURAL Eng : Mohamed Gomaa	SHEET No.	A - 09
CHECKED BY Eng : Mohamed Attia	Location : Plot No :	
SCALE 1:100 / DATE May - 2022	Project No.	

© ALL COPYRIGHTS IS RESERVED

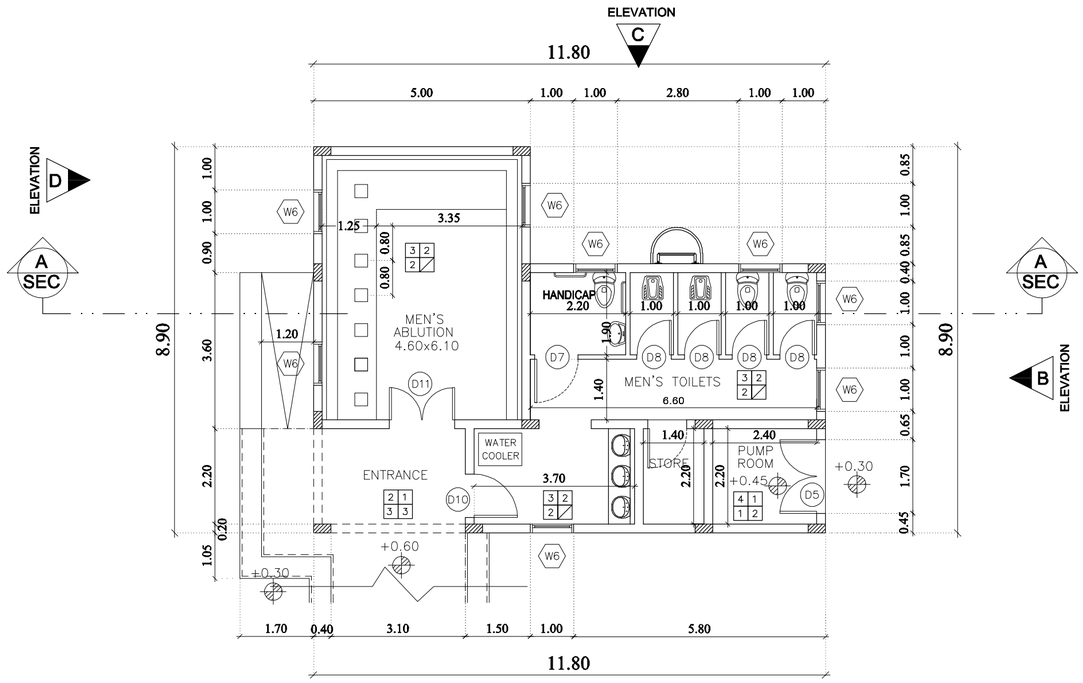

GROUND FLOOR PLAN

(SCALE = 1 : 100)

A ELEVATION

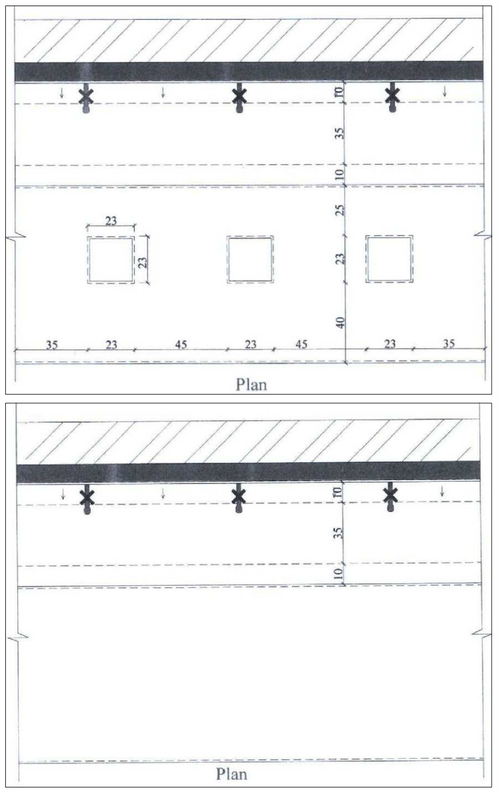

ABLUTION DETAILS

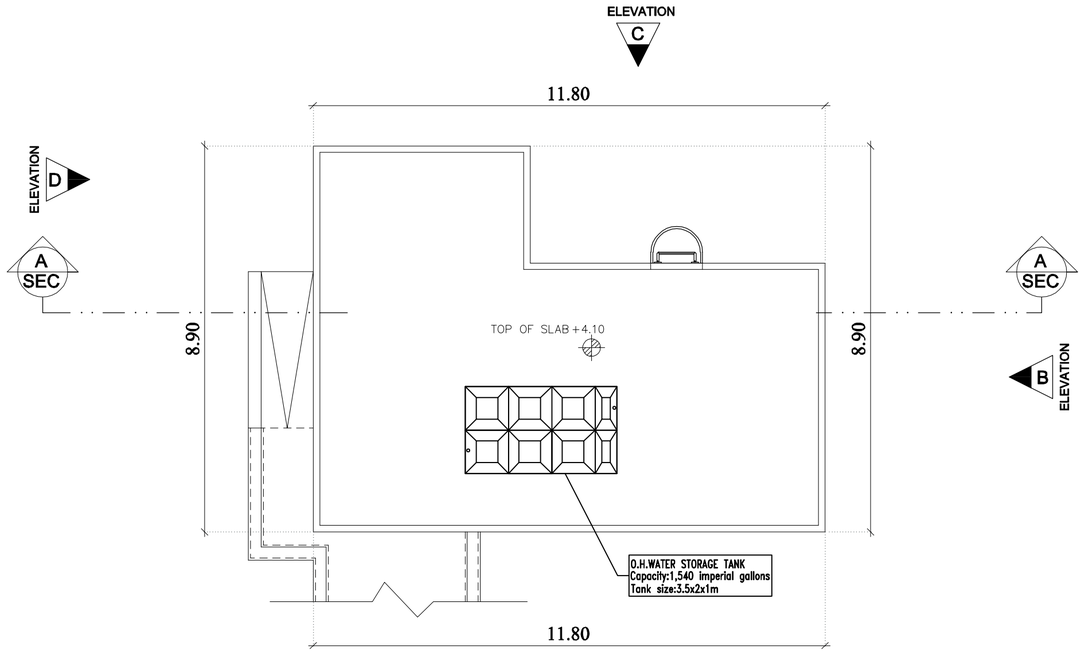

ROOF FLOOR PLAN

(SCALE = 1 : 100)

A ELEVATION

GENERAL NOTES:

1. IT IS NOT ALLOWED TO REPRODUCE THE SHEETS CONTENTS IN ANY FORM EXCEPT FOR THE PURPOSE FOR WHICH IT IS INTENDED.
2. THESE DRAWINGS ARE DIAGRAMMATIC AND SHALL NOT BE SCALED. ADDITIONAL DATA SHALL BE REQUESTED FROM THE CONSULTANCY THROUGH WRITTEN CLARIFICATION. VERIFY ALL EXISTING CONDITIONS AND DIMENSIONS BEFORE PROCEEDING WITH ANY PORTION OF ANY WORK.
3. NO CHANGES, MODIFICATIONS OR DEVIATIONS SHALL BE WRITTEN PERMISSION FROM **ALMASAH ENGINEERING CONSULTANTS.**
4. ALL WORK AS OUTLINED IN THESE DOCUMENTS, SHALL STRICTLY CONFORM TO ALL APPLICABLE CODES. IN THE EVENT OF A CONFLICT, THE MORE STRINGENT REQUIREMENT SHALL GOVERN AND BE MET.

قطاع الهندسة والمباني
إدارة تراخيص البناء
23/05/2022
Architectural Approved
التوقيع

SIA - SM-01

حكومة الشارقة
دائرة الشؤون الإسلامية

CONSULTANT STAMP

المـاسـة للإستشارات الهندسية
مخططات فقط
AL-Masah Engineering Consultant
Drawings Only

المـاسـة للإستشارات الهندسية
AL MASAH Engineering Consultants
Sharjah 06 5 444 521 06 5 444 523 Office: 306, Al Fisal 2 Bldg., King Fisal St.

CLIENT: GOVERNMENT OF SHARJAH - DEPARTMENT OF ISLAMIC AFFAIRS			
PROJECT: (SIA - SM-01) PROPOSED MASJID + ABLUTION + IMAM HOUSE			
SHEET TITLE: ABLUTION GROUND & ROOF FLOOR PLAN			
ARCHITECT Arch. Mostafa Ramadan		TYPE	ARCHITECTURE
STRUCTURAL Eng : Mohamed Gomaa		SHEET No.	A - 10
CHECKED BY Eng : Mohamed Attia		Location :	
		Plot No :	
SCALE 1:100	DATE May - 2022	Project No.	

© ALL COPYRIGHTS IS RESERVED

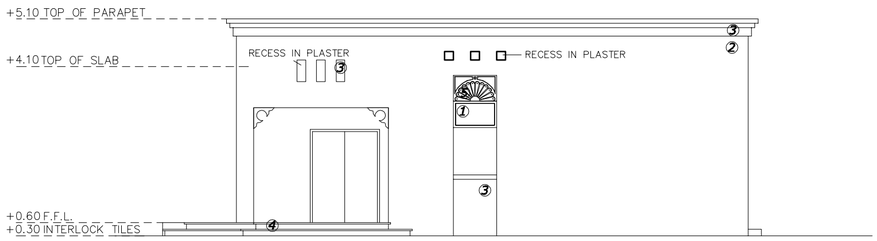

ELEVATION -A
(SCALE = 1 : 100)

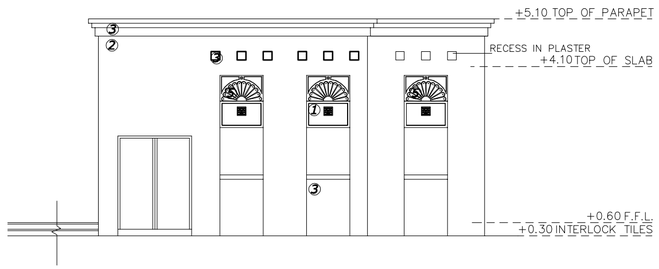

ELEVATION -B
(SCALE = 1 : 100)

ELEVATION FINISHES
1- REFLECTIVE GLASS
2- GRAFFIO DECOR WHITE PAINT OR STONE CLADDING
3- GRAFFIO DECOR OFF WHITE PAINT OR STONE CLADDING
4- GRANITE FINISHING
5- G.R.C.

ALL WINDOWS & BALCONY DOORS SHOULD BE EQUIPED WITH WINDOWS OPENING CONTROL DEVICE (W.O.C.D.) TO LIMITS THE OPENING LESS THAN 10 CM TO HAVE MAXIMUM OPENING LIMIT OF 10 CM TO HELP IN THE PREVENTION OF ACCIDENTAL FALLS FROM WINDOWS & BALCONIES BY CHILDREN AS PER SHARJAH MUNICIPALITY REGULATIONS.

GENERAL NOTES:

1.IT IS NOT ALLOWED TO REPRODUCE THE SHEETS CONTENTS IN ANY FORM EXCEPT FOR THE PURPOSE FOR WHICH IT IS INTENDED.
2. THESE DRAWINGS ARE DIAGRAMMATIC AND SHALL NOT BE SCALED. ADDITIONAL DATA SHALL BE REQUESTED FROM THE CONSULTANCY THROUGH WRITTEN CLARIFICATION. VERIFY ALL EXISTING CONDITIONS AND DIMENSIONS BEFORE PROCEEDING WITH ANY PORTION OF ANY WORK.
3. NO CHANGES, MODIFICATIONS OR DEVIATIONS SHALL BE WRITTEN PERMISSION FROM **ALMASAH ENGINEERING CONSULTANTS.**
4. ALL WORK AS OUTLINED IN THESE DOCUMENTS, SHALL STRICTLY CONFORM TO ALL APPLICABLE CODES. IN THE EVENT OF A CONFLICT, THE MORE STRINGENT REQUIREMENT SHALL GOVERN AND BE MET.

قطاع الهندسة و المباني
إدارة تراخيص البناء
23/05/2022
Architectural Approved
التوقيع

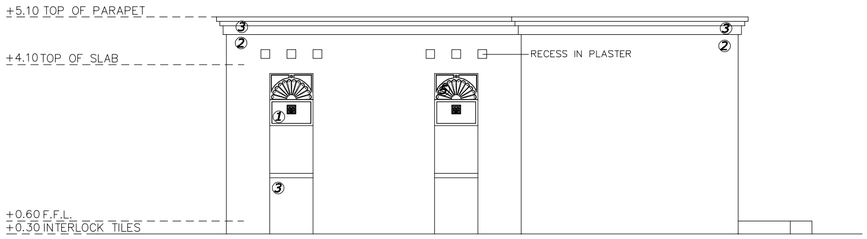

ELEVATION -C
(SCALE = 1 : 100)

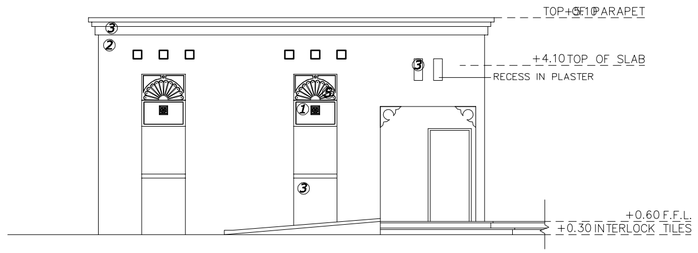

ELEVATION -D
(SCALE = 1 : 100)

SIA - SM-01

حكومة الشارقة
دائرة الشؤون الإسلامية

CONSULTANT STAMP
المساسة للإستشارات الهندسية
مخططات فقط
AL-Masah Engineering Consultant
Drawings Only

*** NOTES :.**

1- ALL EXTERNAL WALLS TO BE 20.cm THERMAL BLOCK.
2- WINDOWS TO BE DOUBLE REFLECTIVE GLASS

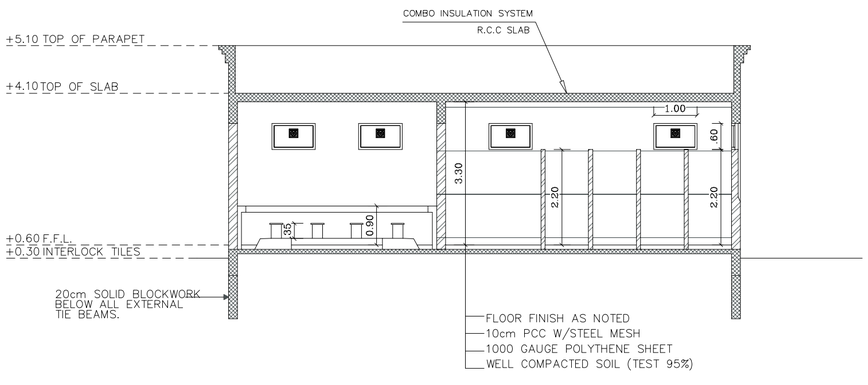

SECTION A-A
(SCALE = 1 : 100)

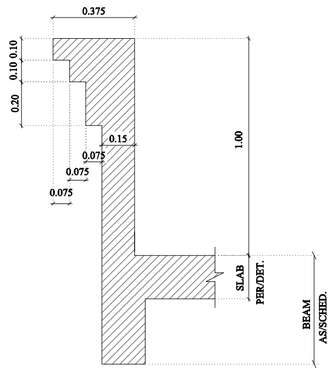

TYPICAL PARAPET DETAIL
SCALE = 1:20

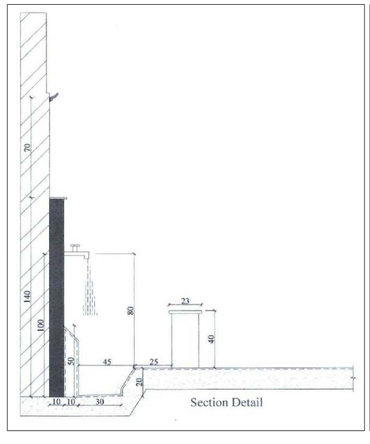

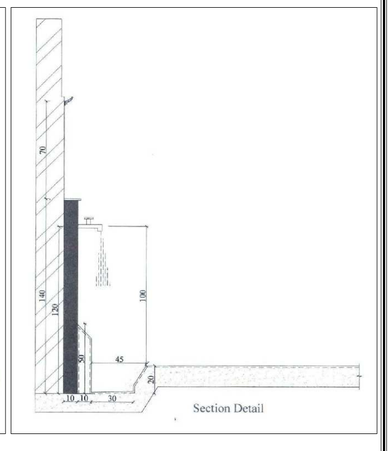

المساسة للإستشارات الهندسية
AL MASAH
Engineering Consultants
Sharjah 06 5 444 521 06 5 444 523 Office: 306, Al Fisal 2 Bldg., King Fisal St.

CLIENT: GOVERNMENT OF SHARJAH - DEPARTMENT OF ISLAMIC AFFAIRS			
PROJECT: (SIA - SM-01) PROPOSED MASJID + ABLUTION + IMAM HOUSE			
SHEET TITLE: ABLUTION ELEVATIONS & SECTION			
ARCHITECT Arch. Mostafa Ramadan		TYPE	ARCHITECTURE
STRUCTURAL Eng : Mohamed Gomaa		SHEET No.	A - 11
CHECKED BY Eng : Mohamed Attia		Location :	
		Plot No :	
SCALE 1:100	DATE May - 2022	Project No.	

© ALL COPYRIGHTS IS RESERVED

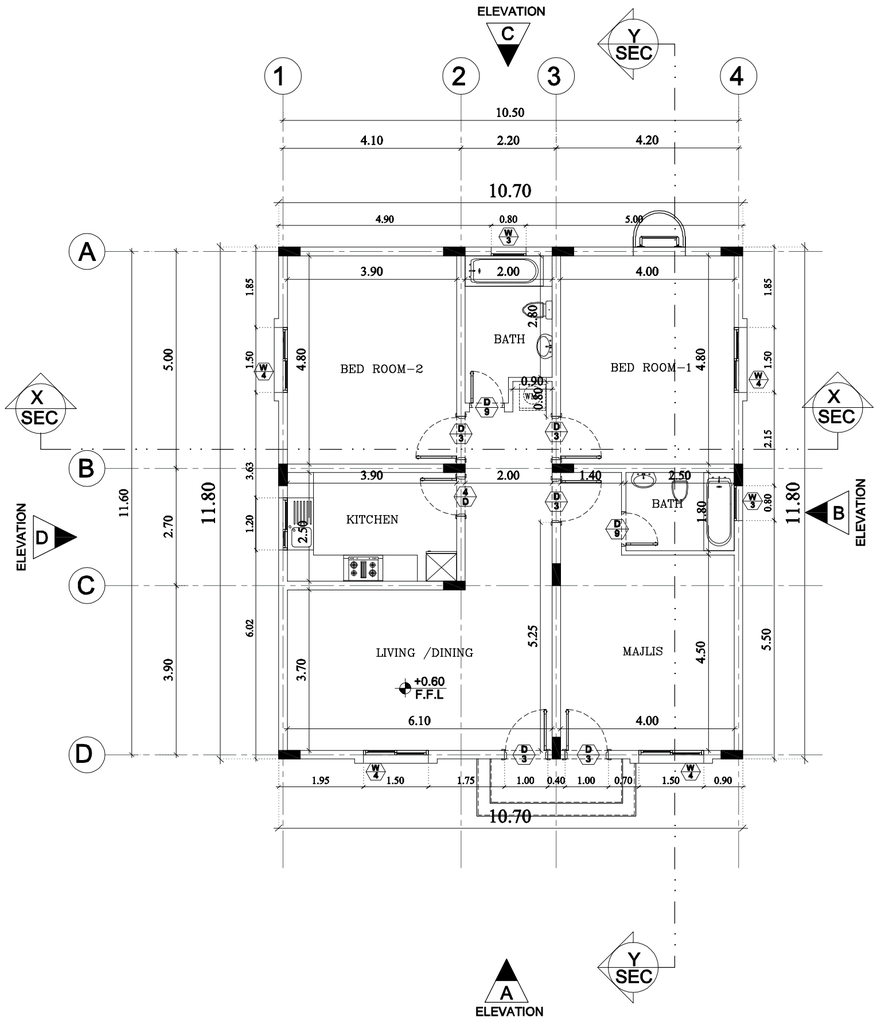

GROUND FLOOR PLAN

(SCALE = 1 : 100)

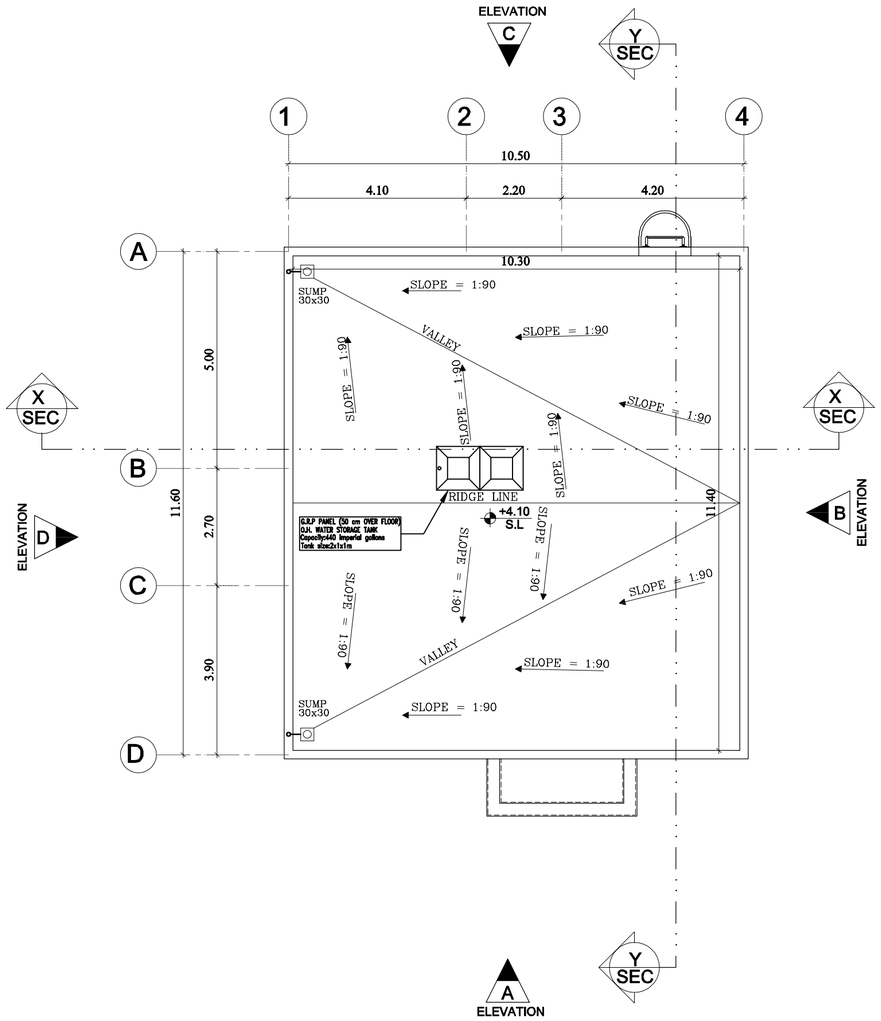

ROOF FLOOR PLAN

(SCALE = 1 : 100)

GENERAL NOTES:

1. IT IS NOT ALLOWED TO REPRODUCE THE SHEETS CONTENTS IN ANY FORM EXCEPT FOR THE PURPOSE FOR WHICH IT IS INTENDED.
2. THESE DRAWINGS ARE DIAGRAMMATIC AND SHALL NOT BE SCALED. ADDITIONAL DATA SHALL BE REQUESTED FROM THE CONSULTANCY THROUGH WRITTEN CLARIFICATION. VERIFY ALL EXISTING CONDITIONS AND DIMENSIONS BEFORE PROCEEDING WITH ANY PORTION OF ANY WORK.
3. NO CHANGES, MODIFICATIONS OR DEVIATIONS SHALL BE WRITTEN PERMISSION FROM **ALMASAH ENGINEERING CONSULTANTS.**
4. ALL WORK AS OUTLINED IN THESE DOCUMENTS, SHALL STRICTLY CONFORM TO ALL APPLICABLE CODES. IN THE EVENT OF A CONFLICT, THE MORE STRINGENT REQUIREMENT SHALL GOVERN AND BE MET.

قطاع الهندسة والمباني
إدارة تراخيص البناء
23/05/2022
Architectural Approved
التوقيع

SIA - SM-01

حكومة الشارقة
دائرة الشؤون الإسلامية

CONSULTANT STAMP

المساسة للاستشارات الهندسية
AL-Masah
Engineering Consultant
Drawings Only

المساسة للاستشارات الهندسية
AL MASAH
Engineering Consultants
Sharjah 06 5 444 521 06 5 444 523 Office: 306, Al Fisal 2 Bldg., King Fisal St.

CLIENT: GOVERNMENT OF SHARJAH - DEPARTMENT OF ISLAMIC AFFAIRS			
PROJECT: (SIA - SM-01) PROPOSED MASJID + ABLUTION + IMAM HOUSE			
SHEET TITLE: IMAM HOUSE GROUND & ROOF FLOOR PLAN			
ARCHITECT Arch. Mostafa Ramadan		TYPE	ARCHITECTURE
STRUCTURAL Eng : Mohamed Gomaa		SHEET No.	A - 12
CHECKED BY Eng : Mohamed Attia		Location :	
		Plot No :	
SCALE 1:100	DATE May - 2022	Project No.	

© ALL COPYRIGHTS IS RESERVED

ELEVATION -A
(SCALE = 1 : 100)

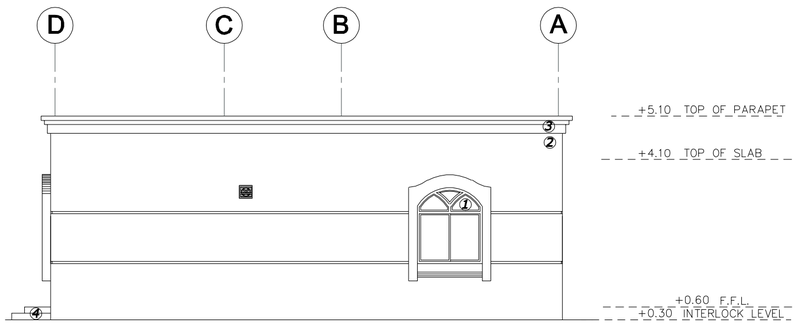

ELEVATION -B
(SCALE = 1 : 100)

ELEVATION FINISHES
1- REFLECTIVE GLASS
2- GRAFFIO DECOR WHITE PAINT OR STONE CLADDING
3- GRAFFIO DECOR OFF WHITE PAINT OR STONE CLADDING
4- GRANITE FINISHING
5- G.R.C.

ALL WINDOWS & BALCONY DOORS SHOULD BE EQUIPED WITH WINDOWS OPENING CONTROL DEVICE (W.O.C.D.) TO LIMITS THE OPENING LESS THAN 10 CM TO HAVE MAXIMUM OPENING LIMIT OF 10 CM TO HELP IN THE PREVENTION OF ACCIDENTAL FALLS FROM WINDOWS & BALCONIES BY CHILDREN AS PER SHARJAH MUNICIPALITY REGULATIONS.

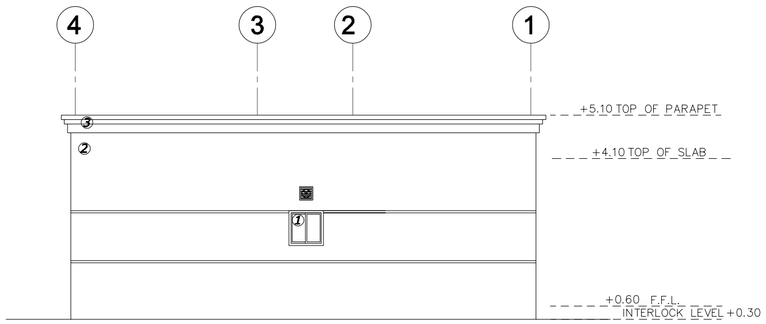

ELEVATION -C
(SCALE = 1 : 100)

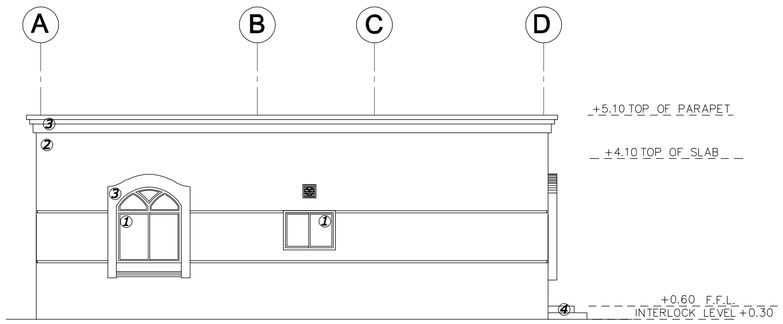

ELEVATION -D
(SCALE = 1 : 100)

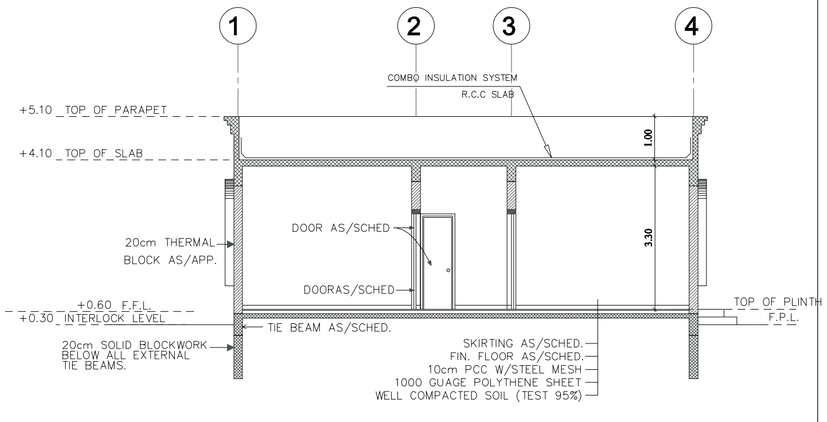

SECTION X-X
(SCALE = 1 : 100)

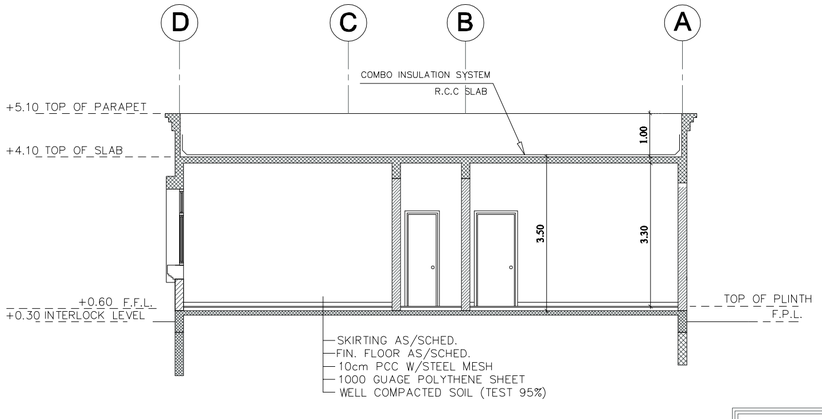

SECTION Y-Y
(SCALE = 1 : 100)

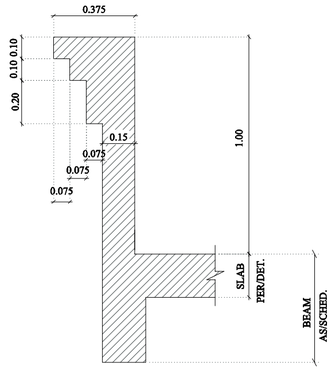

TYPICAL PARAPET DETAIL
SCALE = 1:20

* NOTES :.
1- ALL EXTERNAL WALLS TO BE 20.cm THERMAL BLOCK.
2- WINDOWS TO BE DOUBLE REFLECTIVE GLASS

GENERAL NOTES:
1.IT IS NOT ALLOWED TO REPRODUCE THE SHEETS CONTENTS IN ANY FORM EXCEPT FOR THE PURPOSE FOR WHICH IT IS INTENDED.
2. THESE DRAWINGS ARE DIAGRAMMATIC AND SHALL NOT BE SCALED. ADDITIONAL DATA SHALL BE REQUESTED FROM THE CONSULTANCY THROUGH WRITTEN CLARIFICATION. VERIFY ALL EXISTING CONDITIONS AND DIMENSIONS BEFORE PROCEEDING WITH ANY PORTION OF ANY WORK.
3. NO CHANGES, MODIFICATIONS OR DEVIATIONS SHALL BE WRITTEN PERMISSION FROM **ALMASAH ENGINEERING CONSULTANTS.**
4. ALL WORK AS OUTLINED IN THESE DOCUMENTS, SHALL STRICTLY CONFORM TO ALL APPLICABLE CODES. IN THE EVENT OF A CONFLICT, THE MORE STRINGENT REQUIREMENT SHALL GOVERN AND BE MET.

قطاع الهندسة و المباني
إدارة تراخيص البناء
23/05/2022
Architectural Approved
التوقيع

SIA - SM-01

حكومة الشارقة
دائرة الشؤون الإسلامية

CONSULTANT STAMP
المآسة للاستشارات الهندسية
مخططات فقط
AL-Masah Engineering Consultant
Drawings Only

المآسة للاستشارات الهندسية
AL MASAH Engineering Consultants
Sharjah 06 5 444 521 06 5 444 523 Office: 306, Al Fisal 2 Bldg., King Fisal St.

CLIENT: GOVERNMENT OF SHARJAH - DEPARTMENT OF ISLAMIC AFFAIRS

PROJECT: (SIA - SM-01) PROPOSED MASJID + ABLUTION + IMAM HOUSE

SHEET TITLE: IMAM HOUSE ELEVATIONS & SECTION

ARCHITECT Arch. Mostafa Ramadan	TYPE	ARCHITECTURE
STRUCTURAL Eng : Mohamed Gomaa	SHEET No.	A - 13
CHECKED BY Eng : Mohamed Attia	Location :	
	Plot No :	
SCALE 1:100 / DATE May - 2022	Project No.	

© ALL COPYRIGHTS IS RESERVED

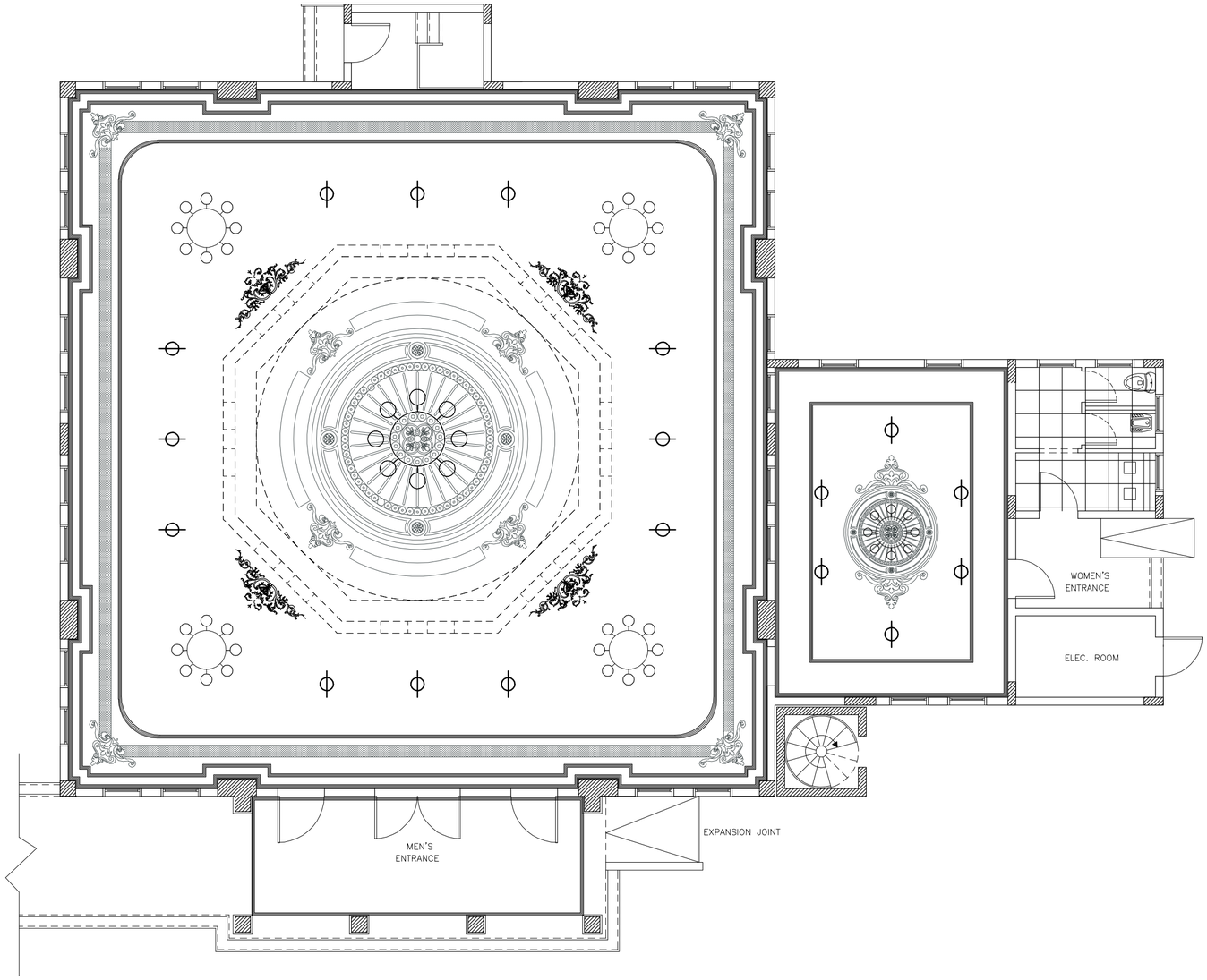

CEILING PLAN

(SCALE = 1 : 100)

GENERAL NOTES:

1. IT IS NOT ALLOWED TO REPRODUCE THE SHEETS CONTENTS IN ANY FORM EXCEPT FOR THE PURPOSE FOR WHICH IT IS INTENDED.
2. THESE DRAWINGS ARE DIAGRAMMATIC AND SHALL NOT BE SCALED. ADDITIONAL DATA SHALL BE REQUESTED FROM THE CONSULTANCY THROUGH WRITTEN CLARIFICATION. VERIFY ALL EXISTING CONDITIONS AND DIMENSIONS BEFORE PROCEEDING WITH ANY PORTION OF ANY WORK.
3. NO CHANGES, MODIFICATIONS OR DEVIATIONS SHALL BE WRITTEN PERMISSION FROM **ALMASAH ENGINEERING CONSULTANTS.**
4. ALL WORK AS OUTLINED IN THESE DOCUMENTS, SHALL STRICTLY CONFORM TO ALL APPLICABLE CODES. IN THE EVENT OF A CONFLICT, THE MORE STRINGENT REQUIREMENT SHALL GOVERN AND BE MET.

SIA - SM-01

حكومة الشارقة
دائرة الشؤون الإسلامية

CONSULTANT STAMP

المـاسـة للإستشارات الهندسية
AL-Masah Engineering Consultant
Drawings Only

المـاسـة للإستشارات الهندسية
AL MASAH
Engineering Consultants

Sharjah 06 5 444 521 06 5 444 523 Office: 306, Al Fisal 2 Bldg., King Fisal St.

CLIENT: GOVERNMENT OF SHARJAH - DEPARTMENT OF ISLAMIC AFFAIRS			
PROJECT: (SIA - SM-01) PROPOSED MASJID + ABLUTION + IMAM HOUSE			
SHEET TITLE: CEILING PLAN			
ARCHITECT Arch. Mostafa Ramadan		TYPE	ARCHITECTURE
STRUCTURAL Eng : Mohamed Gomaa		SHEET No.	A - 14
CHECKED BY Eng : Mohamed Attia		Location :	
		Plot No :	
SCALE 1:100	DATE May - 2022	Project No.	

© ALL COPYRIGHTS IS RESERVED

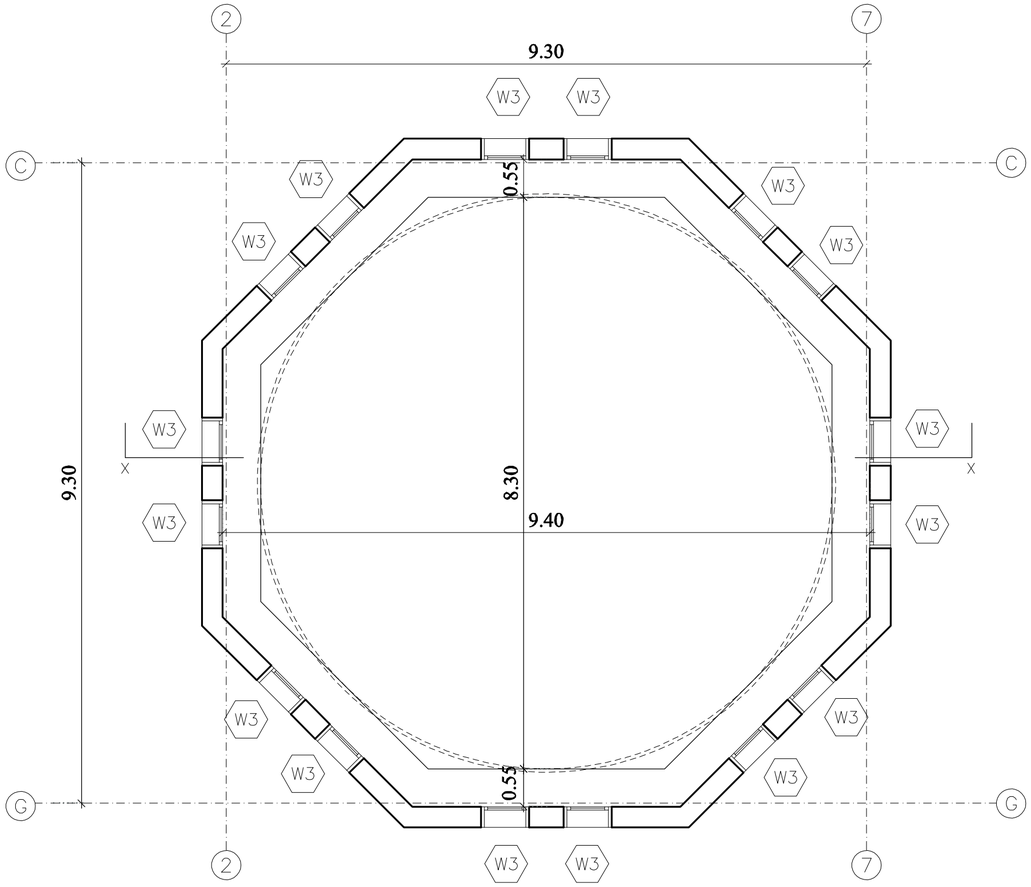

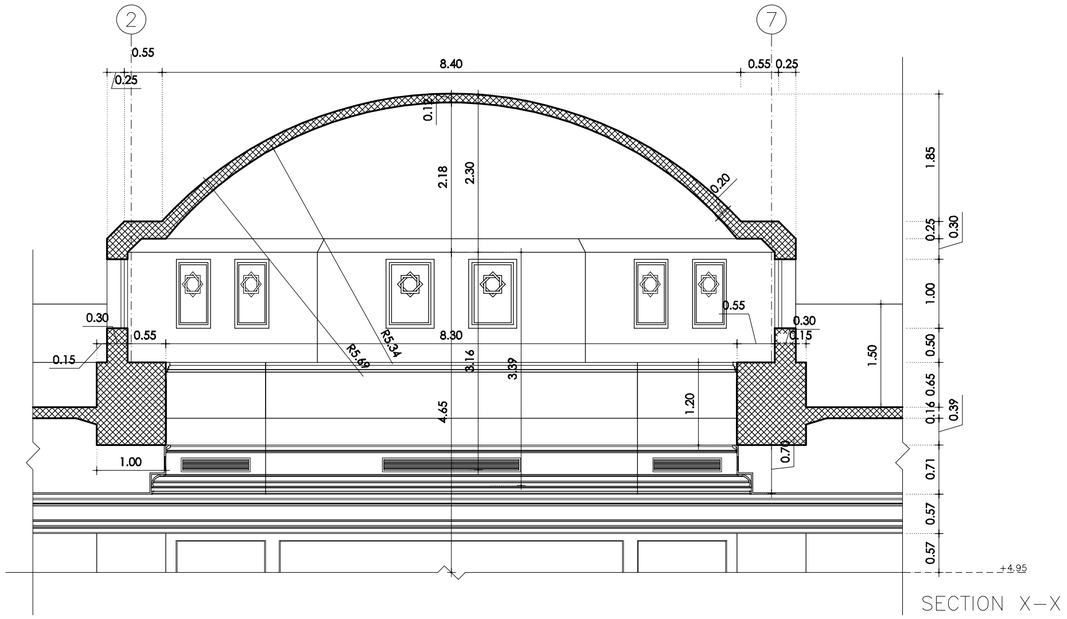

SECTION X–X

GENERAL NOTES:

1. IT IS NOT ALLOWED TO REPRODUCE THE SHEETS CONTENTS IN ANY FORM EXCEPT FOR THE PURPOSE FOR WHICH IT IS INTENDED.
2. THESE DRAWINGS ARE DIAGRAMMATIC AND SHALL NOT BE SCALED. ADDITIONAL DATA SHALL BE REQUESTED FROM THE CONSULTANCY THROUGH WRITTEN CLARIFICATION. VERIFY ALL EXISTING CONDITIONS AND DIMENSIONS BEFORE PROCEEDING WITH ANY PORTION OF ANY WORK.
3. NO CHANGES, MODIFICATIONS OR DEVIATIONS SHALL BE WRITTEN PERMISSION FROM **ALMASAH ENGINEERING CONSULTANTS.**
4. ALL WORK AS OUTLINED IN THESE DOCUMENTS, SHALL STRICTLY CONFORM TO ALL APPLICABLE CODES. IN THE EVENT OF A CONFLICT, THE MORE STRINGENT REQUIREMENT SHALL GOVERN AND BE MET.

SIA - SM-01

حكومة الشارقة
دائرة الشؤون الإسلامية

CONSULTANT STAMP

المساسة للاستشارات الهندسية
مخططات فقط
AL-Masah
Engineering Consultant
Drawings Only

المساسة للاستشارات الهندسية
AL MASAH
Engineering Consultants
Sharjah 06 5 444 521 06 5 444 523 Office: 306, Al Fisal 2 Bldg., King Fisal St.

CLIENT:
GOVERNMENT OF SHARJAH - DEPARTMENT OF ISLAMIC AFFAIRS

PROJECT:
(SIA - SM-01)
PROPOSED MASJID + ABLUTION + IMAM HOUSE

SHEET TITLE:
DOME DETAILS (MASJID)

ARCHITECT Arch. Mostafa Ramadan	TYPE	ARCHITECTURE
STRUCTURAL Eng : Mohamed Gomaa	SHEET No.	A - 15
CHECKED BY Eng : Mohamed Attia	Location :	
	Plot No :	
SCALE 1:100 / DATE May - 2022	Project No.	

© ALL COPYRIGHTS IS RESERVED

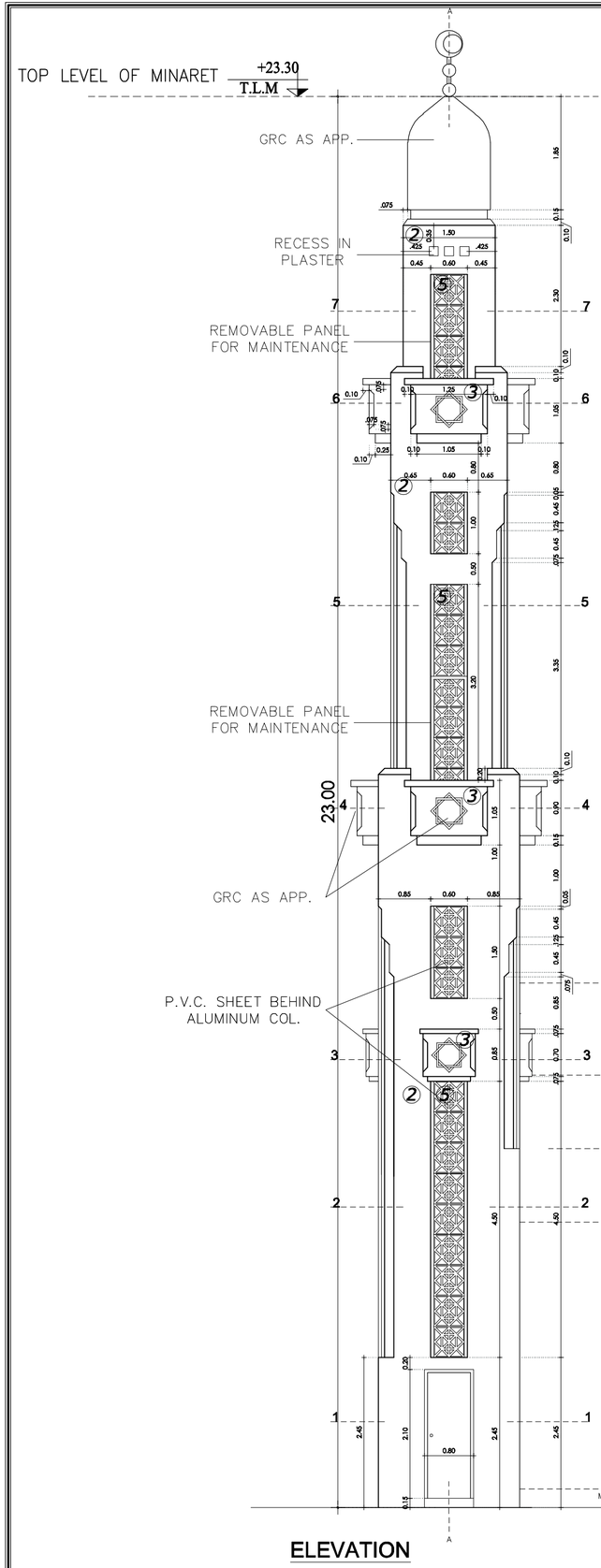

ELEVATION

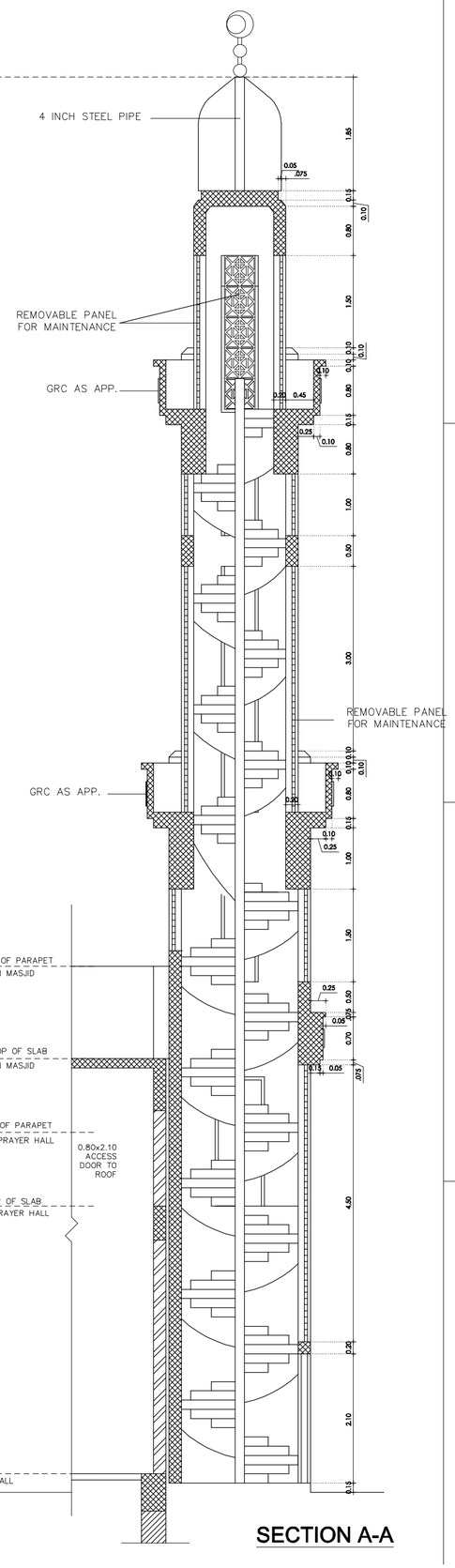

SECTION A-A

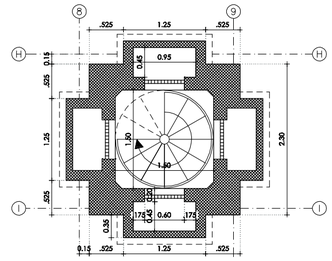

SECTION 4-4

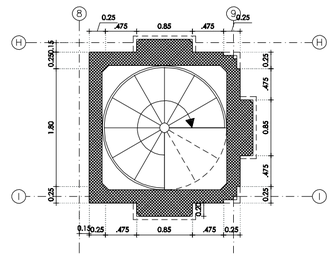

SECTION 3-3

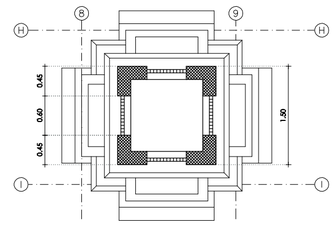

SECTION 7-7

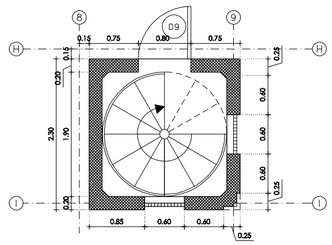

SECTION 2-2

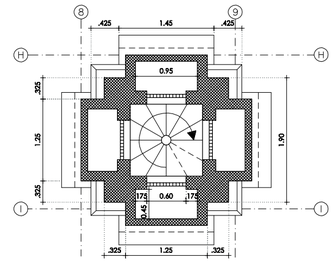

SECTION 6-6

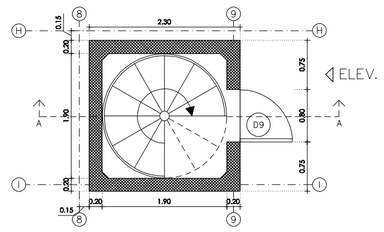

SECTION 1-1

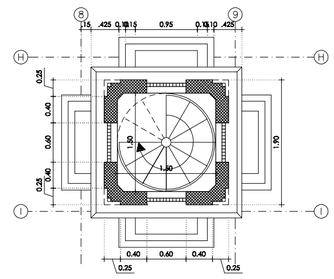

SECTION 5-5

GENERAL NOTES:

1. IT IS NOT ALLOWED TO REPRODUCE THE SHEETS CONTENTS IN ANY FORM EXCEPT FOR THE PURPOSE FOR WHICH IT IS INTENDED.
2. THESE DRAWINGS ARE DIAGRAMMATIC AND SHALL NOT BE SCALED. ADDITIONAL DATA SHALL BE REQUESTED FROM THE CONSULTANCY THROUGH WRITTEN CLARIFICATION. VERIFY ALL EXISTING CONDITIONS AND DIMENSIONS BEFORE PROCEEDING WITH ANY PORTION OF ANY WORK.
3. NO CHANGES, MODIFICATIONS OR DEVIATIONS SHALL BE WRITTEN PERMISSION FROM **ALMASAH ENGINEERING CONSULTANTS.**
4. ALL WORK AS OUTLINED IN THESE DOCUMENTS, SHALL STRICTLY CONFORM TO ALL APPLICABLE CODES. IN THE EVENT OF A CONFLICT, THE MORE STRINGENT REQUIREMENT SHALL GOVERN AND BE MET.

قطاع الهندسة و المباني
إدارة تراخيص البناء
23/05/2022
Architectural Approved
التوقيع

SIA - SM-01

حكومة الشارقة
دائرة الشؤون الإسلامية

CONSULTANT STAMP

المـاسـة للاستشارات الهندسية
مخططات فقط
AL-Masah Engineering Consultant
Drawings Only

المـاسـة للاستشارات الهندسية
AL MASAH Engineering Consultants
Sharjah 06 5 444 521 06 5 444 523 Office: 306, Al Fisal 2 Bldg., King Fisal St.

CLIENT: GOVERNMENT OF SHARJAH - DEPARTMENT OF ISLAMIC AFFAIRS

PROJECT: (SIA - SM-01) PROPOSED MASJID + ABLUTION + IMAM HOUSE

SHEET TITLE: MINAR DETAILS

ARCHITECT Arch. Mostafa Ramadan	TYPE	ARCHITECTURE
STRUCTURAL Eng : Mohamed Gomaa	SHEET No.	A - 16
CHECKED BY Eng : Mohamed Attia	Location :	
	Plot No :	
SCALE 1:100 / DATE May - 2022	Project No.	

© ALL COPYRIGHTS IS RESERVED

TYPICAL DETAIL AT W2/W4 (LADIES PRAYER)

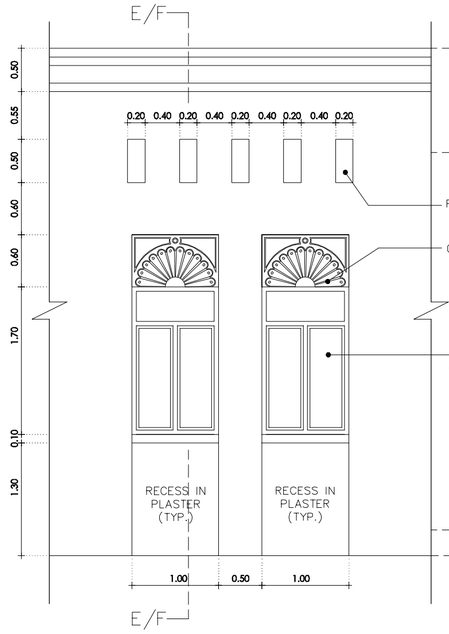

ELEVATION AT W2/W4

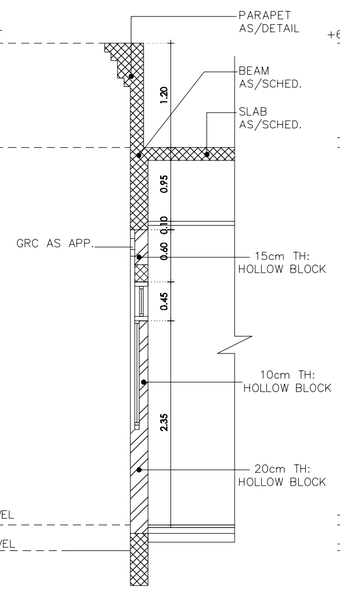

SECTION F–F AT W4/W5

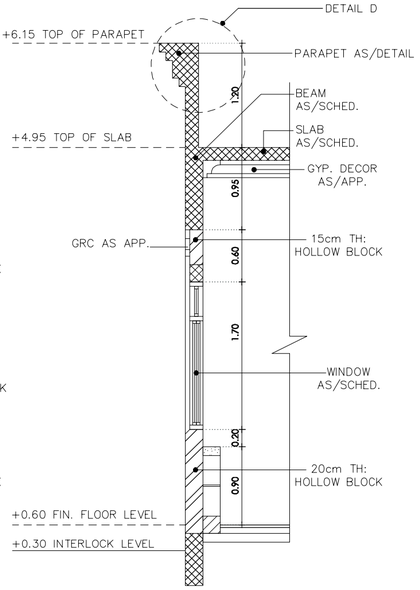

SECTION E–E AT W2

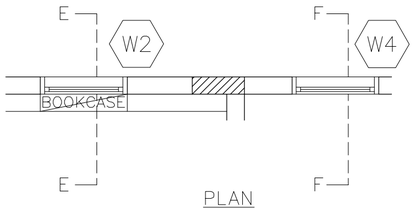

PLAN

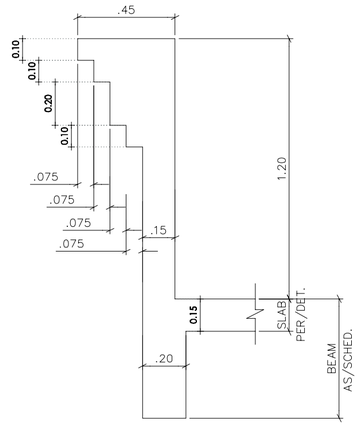

DETAIL D
SCALE = 1:20

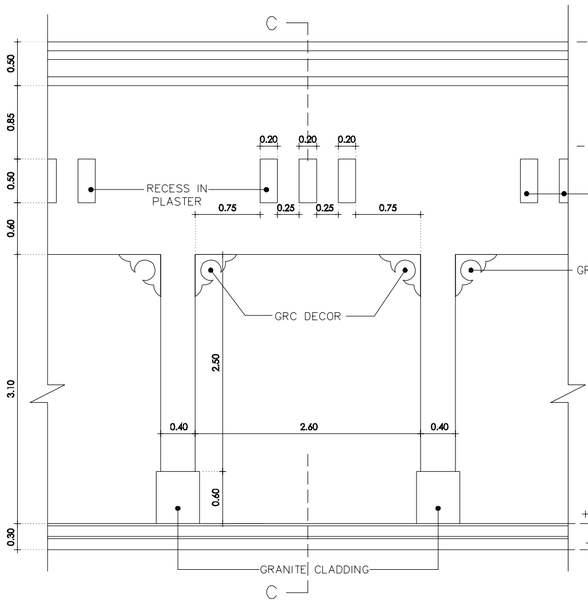

TYP. DETAIL AT FRONT ENTRANCE – MAIN MOSQUE

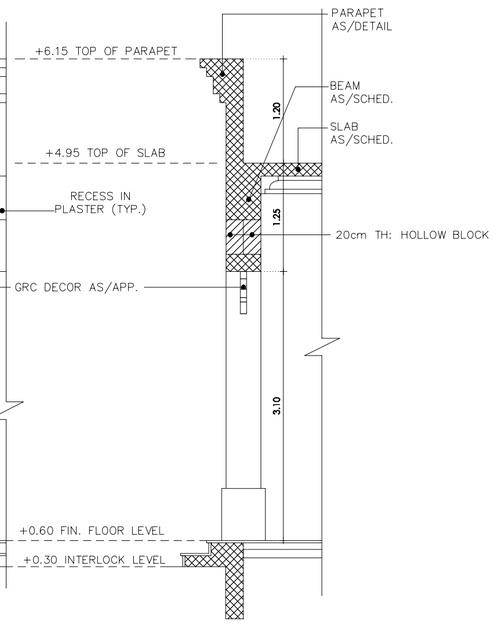

SECTION C–C

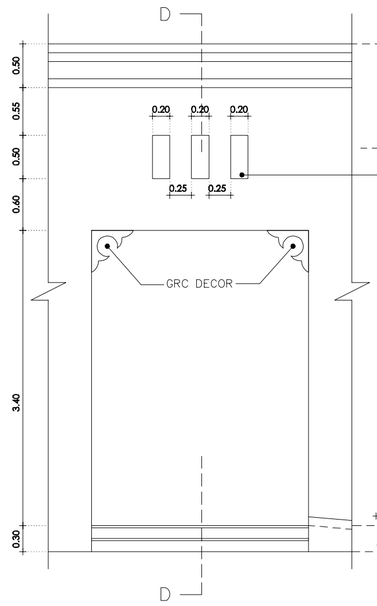

TYP. DETAIL AT LADIES ENTRANCE

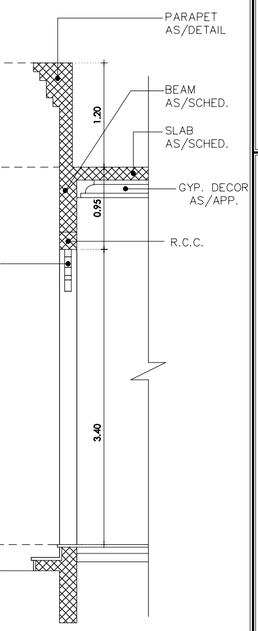

SECTION D–D

GENERAL NOTES:

1. IT IS NOT ALLOWED TO REPRODUCE THE SHEETS CONTENTS IN ANY FORM EXCEPT FOR THE PURPOSE FOR WHICH IT IS INTENDED.
2. THESE DRAWINGS ARE DIAGRAMMATIC AND SHALL NOT BE SCALED. ADDITIONAL DATA SHALL BE REQUESTED FROM THE CONSULTANCY THROUGH WRITTEN CLARIFICATION. VERIFY ALL EXISTING CONDITIONS AND DIMENSIONS BEFORE PROCEEDING WITH ANY PORTION OF ANY WORK.
3. NO CHANGES, MODIFICATIONS OR DEVIATIONS SHALL BE WRITTEN PERMISSION FROM **ALMASAH ENGINEERING CONSULTANTS.**
4. ALL WORK AS OUTLINED IN THESE DOCUMENTS, SHALL STRICTLY CONFORM TO ALL APPLICABLE CODES. IN THE EVENT OF A CONFLICT, THE MORE STRINGENT REQUIREMENT SHALL GOVERN AND BE MET.

SIA - SM-01

حكومة الشارقة
دائرة الشؤون الإسلامية

CONSULTANT STAMP

المآسة للإستشارات الهندسية
مخططات فقط
AL-Masah
Engineering Consultant
Drawings Only

المآسة للإستشارات الهندسية
AL MASAH
Engineering Consultants
Sharjah 06 5 444 521 06 5 444 523 Office: 306, Al Fisal 2 Bldg., King Fisal St.

CLIENT: GOVERNMENT OF SHARJAH - DEPARTMENT OF ISLAMIC AFFAIRS			
PROJECT: (SIA - SM-01) PROPOSED MASJID + ABLUTION + IMAM HOUSE			
SHEET TITLE: PROPOSAL - 4 SECTION A-A , SECTION B-B			
ARCHITECT Arch. Mostafa Ramadan		TYPE	ARCHITECTURE
STRUCTURAL Eng : Mohamed Gomaa		SHEET No.	A - 17
CHECKED BY Eng : Mohamed Attia		Location :	
		Plot No :	
SCALE 1:100	DATE May - 2022	Project No.	

© ALL COPYRIGHTS IS RESERVED

TYPICAL DETAIL AT W1
MEN'S PRAYER HALL

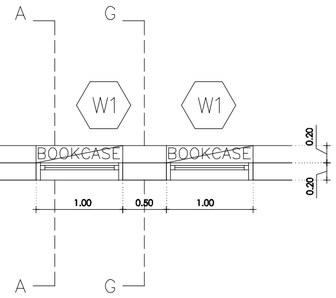

PLAN

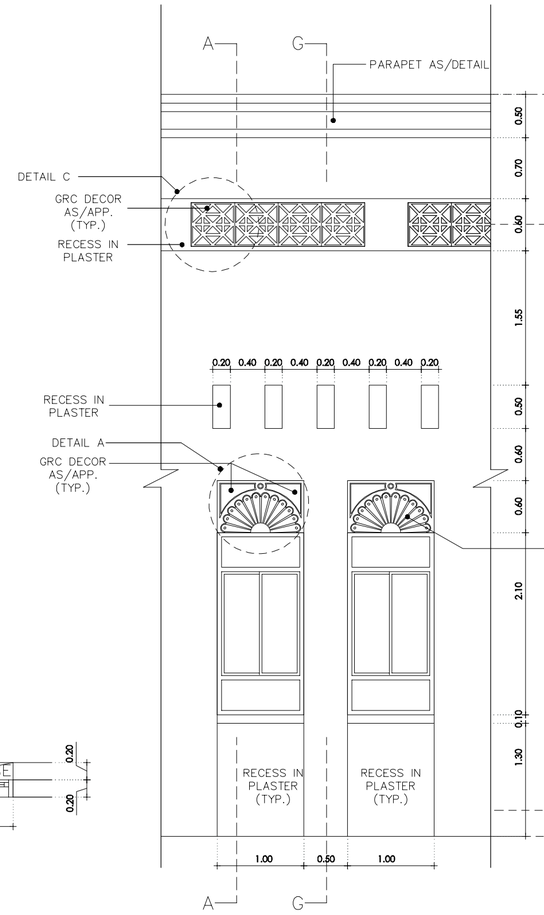

ELEVATION AT W1

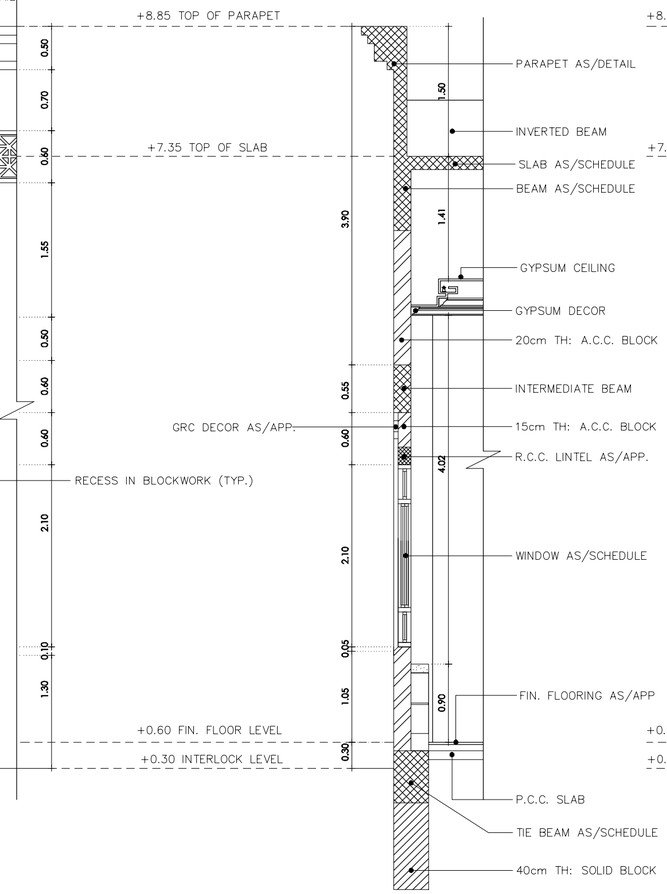

SECTION A–A

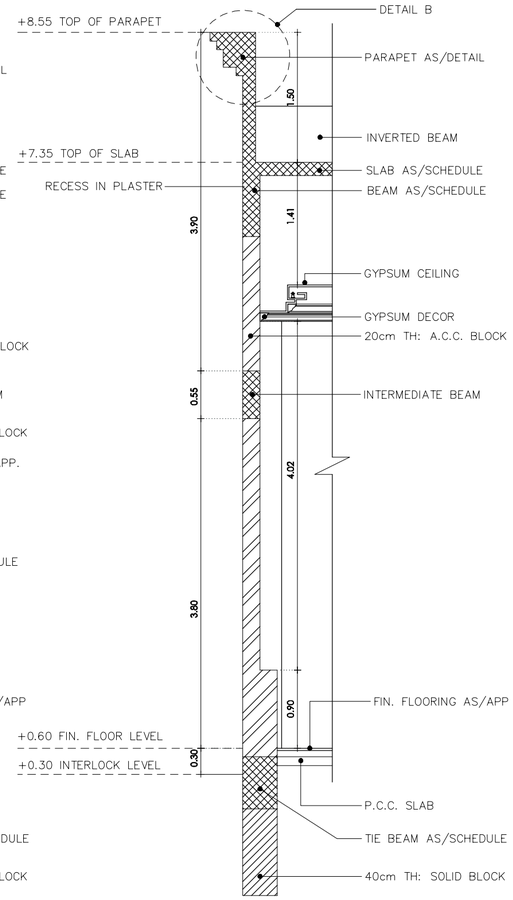

SECTION G–G

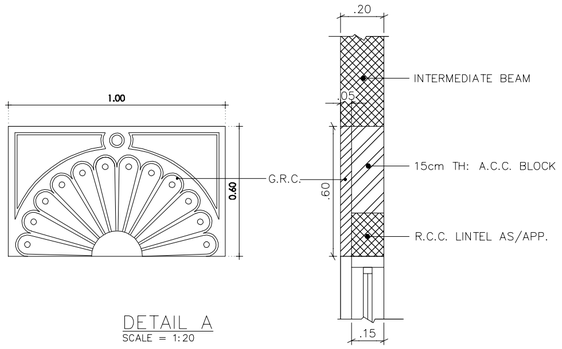

DETAIL A
SCALE = 1:20

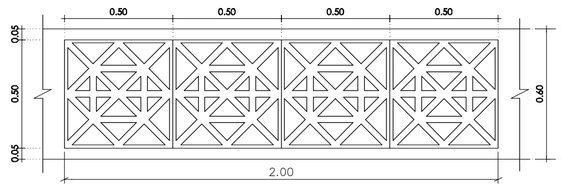

DETAIL C
SCALE = 1:20

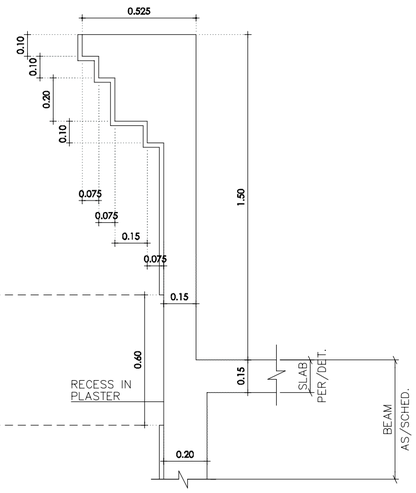

DETAIL B
SCALE = 1:20

GENERAL NOTES:

1. IT IS NOT ALLOWED TO REPRODUCE THE SHEETS CONTENTS IN ANY FORM EXCEPT FOR THE PURPOSE FOR WHICH IT IS INTENDED.
2. THESE DRAWINGS ARE DIAGRAMMATIC AND SHALL NOT BE SCALED. ADDITIONAL DATA SHALL BE REQUESTED FROM THE CONSULTANCY THROUGH WRITTEN CLARIFICATION. VERIFY ALL EXISTING CONDITIONS AND DIMENSIONS BEFORE PROCEEDING WITH ANY PORTION OF ANY WORK.
3. NO CHANGES, MODIFICATIONS OR DEVIATIONS SHALL BE WRITTEN PERMISSION FROM **ALMASAH ENGINEERING CONSULTANTS.**
4. ALL WORK AS OUTLINED IN THESE DOCUMENTS, SHALL STRICTLY CONFORM TO ALL APPLICABLE CODES. IN THE EVENT OF A CONFLICT, THE MORE STRINGENT REQUIREMENT SHALL GOVERN AND BE MET.

SIA - SM-01

حكومة الشارقة
دائرة الشؤون الإسلامية

CONSULTANT STAMP

المـاسـة للاستشارات الهندسية
مخططات فقط
AL-Masah Engineering Consultant
Drawings Only

المـاسـة للاستشارات الهندسية
AL MASAH Engineering Consultants
Sharjah 06 5 444 521 06 5 444 523 Office: 306, Al Fisal 2 Bldg., King Fisal St.

CLIENT:
GOVERNMENT OF SHARJAH - DEPARTMENT OF ISLAMIC AFFAIRS

PROJECT:
(SIA - SM-01)
PROPOSED MASJID + ABLUTION + IMAM HOUSE

SHEET TITLE:
PROPOSAL - 4
SECTION A-A , SECTION B-B

ARCHITECT Arch. Mostafa Ramadan		TYPE	ARCHITECTURE
STRUCTURAL Eng : Mohamed Gomaa		SHEET No.	A - 18
CHECKED BY Eng : Mohamed Attia		Location :	
		Plot No :	
SCALE 1:100	DATE May - 2022	Project No.	

© ALL COPYRIGHTS IS RESERVED

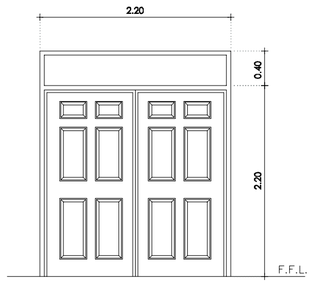

WOODEN DOUBLE LEAF DECORATIVE
SOLID PANEL AS PER APPROVAL

D1

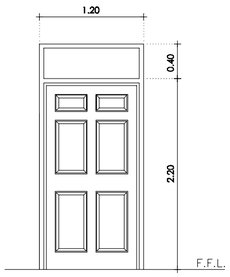

WOODEN SINGLE LEAF DECORATIVE
SOLID PANEL AS PER APPROVAL

D2

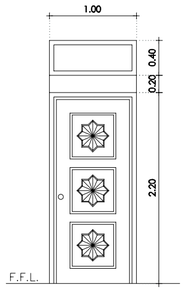

WOODEN SINGLE LEAF DECORATIVE
SOLID PANEL AS PER APPROVAL

D3

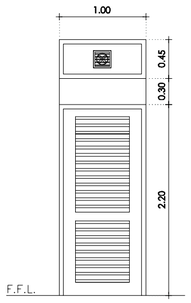

HEAVY SECTION, POWDER COATED,
LOUVERED ALUMINUM DOOR
COLOR AS PER APPROVAL

D4

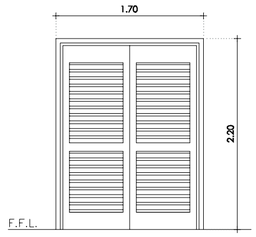

HEAVY SECTION, POWDER COATED,
LOUVERED ALUMINUM DOOR
COLOR AS PER APPROVAL

D5

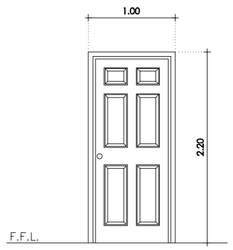

WOODEN SINGLE LEAF DECORATIVE
SOLID PANEL AS PER APPROVAL

D6

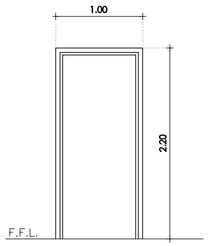

SINGLE LEAF WOODEN FLUSH DOOR
POLISHED WITH LACQUER POLISH AS PER APPROVAL

D7

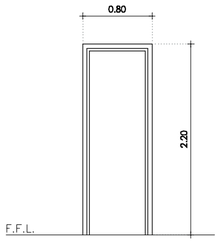

SINGLE LEAF WOODEN FLUSH DOOR
POLISHED WITH LACQUER POLISH AS PER APPROVAL

D8

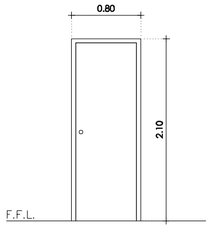

MEDIUM SECTION, POWDER COATED,
LOUVERED ALUMINUM DOOR
COLOR AS PER APPROVAL

D9

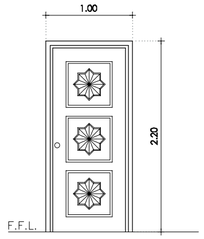

WOODEN SINGLE LEAF DECORATIVE
SOLID PANEL AS PER APPROVAL

D10

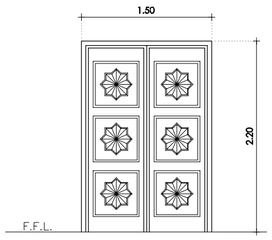

WOODEN DOUBLE LEAF DECORATIVE
SOLID PANEL AS PER APPROVAL

D11

GENERAL DOOR/WINDOW NOTES

1- DRAWINGS ARE NOT TO BE SCALED.

2- THIS DRAWING IS TO BE READ IN CONJUNCTION WITH ALL OTHER RELEVANT DRAWINGS.

3- CONTRACTOR IS TO CONFIRM AND WORK TO ACTUAL EXIST. DIMENSIONS ON SITE.

4- ALL DIMENSIONS RELATE TO STRUCTURAL OPENINGS UNLESS OTHERWISE NOTED.

5- CONTRACTOR SHALL SUBMIT ALL NECESSARY DOOR/WINDOW SHOP DRAWINGS FOR APPROVAL PRIOR TO FABRICATION AND INSTALLATION.

6- ALL WOODEN DOORS TO HAVE ARCHITRAVES ON BOTH SIDES AS PER APPROVAL.

7- ALL FLUSH DOOR SHUTTERS SHOULD BE MIN. 75% SOLID INSIDE AS PER APPROVAL.

8- ALL ALUMINUM DOORS/WINDOWS TO HAVE ALUMINUM ARCHITRAVE BOTH SIDES AS PER APPROVAL UNLESS NOTED OTHERWISE.

9- ALL DOOR CLOSERS ARE TO HAVE 90 DEGREE HOLD OPEN FACILITY.

10- ALL EXTERNAL DOORS SHALL HAVE WEATHER SEALS.

11- ALL GLAZING BELOW 90cm ABOVE FINISH FLOOR LEVEL SHALL BE WITH TEMPERED GLASS

TIMBER OPENINGS

1- ALL DOORS SHALL BE COMPLETE WITH 1-1/2 PAIR OF BRASS HINGES (3 PAIR HEAVY DUTY FOR DOUBLE DOORS) & APPROVED QUALITY LOCKS, CLOSERS, HANDLES, BOLTS AND DOOR STOPS AS NOTED.

2- CONTRACTOR SHALL SUBMIT SAMPLES OF ALL IRON MONGERY TO BE USED FOR CONSULTANTS APPROVAL PRIOR TO PLACING AN ORDER.

3- DOOR FRAME SHALL BE SECURED TO OPENINGS WITH MIN. 3 No.'s 10mm dia. & 4" LONG EXPANDING BOLTS.

4- ALL INSIDE FACES OF TIMBER FRAMES TO BE PAINTED WITH PRESERVATIVE PAINT OF APPROVED QUALITY.

5- ALL PANELLED DOORS SHALL HAVE STILES, TOP RAIL & MIDDLE RAIL MIN. 4" WIDE. BOTTOM RAIL MIN. 8" WIDE. DECORATIVE PANELS AS/APPROVED DESIGN.

6- PROVIDE 3/4" x 9" OR 5" MARINE PLYWOOD SUBFRAMES TO ALL DOOR OPENINGS.

7- ALL FLUSH DOORS TO BE 100% SOLID CORE OR 80% SEMI-SOLID CORE WITH HARDWOOD LIPPING ALL AROUND AS PER SPECIFICATIONS.

8- PROVIDE 2" x 9" OR 2" x 5" DECORATIVE RED MERRANTI WOOD FRAME ON BOTH SIDES.

ALUMINUM OPENINGS

1-CONTRACTOR SHALL SUBMIT ALL SAMPLES OF ALL ALUM. SECTIONS, GLAZING, LOCKS, HANDLES ETC., FOR APPROVAL OF CONSULTANT PRIOR TO PLACING AN ORDER.

2-ALL ALUMINUM OPENINGS TO HAVE .75" MARINE PLY SUB-FRAME OR TREATED RED MERANTI AS/APPROVAL.

3-ALL ALUMINUM OPENINGS TO BE SEALED WITH 2 PARTS POLYSULPHIDE SEALANT MIN .25" THICK.

4-DRAINAGE WEEP HOLES TO BE PROVIDED AT THE BOTTOMS OF ALL ALUMINUM FRAMES AS PER APPROVAL.

5-ALL ALUMINUM DOORS AND WINDOW S SHALL BE COMPLETE WITH APPROPRIATE HANDLES, LOCKS, SLIDING GEAR ETC., WHICH SHALL BE OF APPROVED QUALITY AND DESIGN.

6-WHERE EVER MARINE PLY SUBFRAME IS EXPOSED PROVIDE 1 9/32THICK RED MERRANTI COVER SLIP (SCREWED) TO CONCEAL THE SAME/EXPOSED SURFACES TO BE TREATED WITH APP. PRESERVATIVE PAINT.

7-ALL SILL HEIGHTS ARE FROM FINISH FLOOR LEVEL UNLESS NOTED OTHERWISE.

8-FLY MESH SCREENS TO BE FROM INSIDE UNLESS NOTED OTHERWISE

GENERAL NOTES:

1.IT IS NOT ALLOWED TO REPRODUCE THE SHEETS CONTENTS IN ANY FORM EXCEPT FOR THE PURPOSE FOR WHICH IT IS INTENDED.
2. THESE DRAWINGS ARE DIAGRAMMATIC AND SHALL NOT BE SCALED. ADDITIONAL DATA SHALL BE REQUESTED FROM THE CONSULTANCY THROUGH WRITTEN CLARIFICATION. VERIFY ALL EXISTING CONDITIONS AND DIMENSIONS BEFORE PROCEEDING WITH ANY PORTION OF ANY WORK.
3. NO CHANGES, MODIFICATIONS OR DEVIATIONS SHALL BE WRITTEN PERMISSION FROM **ALMASAH ENGINEERING CONSULTANTS.**
4. ALL WORK AS OUTLINED IN THESE DOCUMENTS, SHALL STRICTLY CONFORM TO ALL APPLICABLE CODES. IN THE EVENT OF A CONFLICT, THE MORE STRINGENT REQUIREMENT SHALL GOVERN AND BE MET.

SIA - SM-01

حكومة الشارقة
دائرة الشؤون الإسلامية

CONSULTANT STAMP

المآسة للاستشارات الهندسية
مخططات فقط
AL-Masah
Engineering Consultant
Drawings Only

المآسة للاستشارات الهندسية
AL MASAH
Engineering Consultants
Sharjah 06 5 444 521 06 5 444 523 Office: 306, Al Fisal 2 Bldg., King Fisal St.

CLIENT:
GOVERNMENT OF SHARJAH - DEPARTMENT OF ISLAMIC AFFAIRS

PROJECT:
(SIA - SM-01)
PROPOSED MASJID + ABLUTION + IMAM HOUSE

SHEET TITLE:
DETAIL OF DOORS

ARCHITECT Arch. Mostafa Ramadan	TYPE	ARCHITECTURE
STRUCTURAL Eng : Mohamed Gomaa	SHEET No.	A - 19
CHECKED BY Eng : Mohamed Attia	Location :	
	Plot No :	
SCALE 1:100 / DATE May - 2022	Project No.	

© ALL COPYRIGHTS IS RESERVED

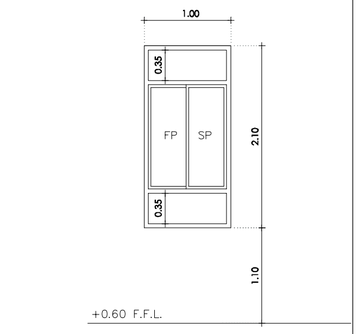

MEDIUM SECTION POWDER COATED ALUMINUM WINDOW
COLOR AS PER APPROVAL

WINDOW GLAZING =6mm THICK REF./TINTED GLASS OUTSIDE AND 6mm THICK SANDBLASTING GLASS INSIDE WITH 12mm AIRSPACE IN BETWEEN. INTERNAL WINDOWS TO BE 6mm THICK SANDBLASTED GLASS AS PER APPROVAL.

W1

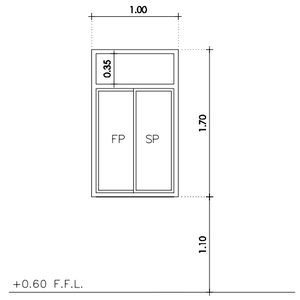

MEDIUM SECTION POWDER COATED ALUMINUM WINDOW
COLOR AS PER APPROVAL

WINDOW GLAZING =6mm THICK REF./TINTED GLASS OUTSIDE AND 6mm THICK SANDBLASTING GLASS INSIDE WITH 12mm AIRSPACE IN BETWEEN. INTERNAL WINDOWS TO BE 6mm THICK SANDBLASTED GLASS AS PER APPROVAL.

W2

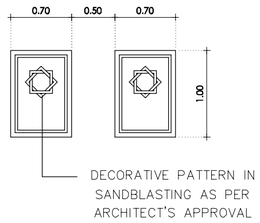

DOME'S WINDOW

HEAVY SECTION POWDER COATED ALUMINUM WINDOW
COLOR AS PER APPROVAL

WINDOW GLAZING =6mm THICK REF./TINTED GLASS OUTSIDE AND 6mm THICK SANDBLASTED GLASS INSIDE WITH 12mm AIRSPACE IN BETWEEN

W3

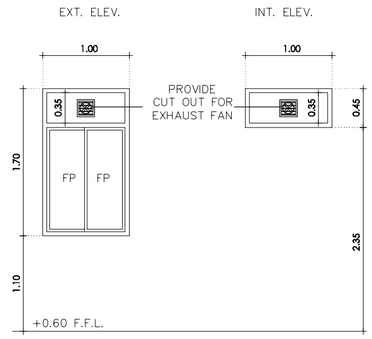

MEDIUM SECTION POWDER COATED ALUMINUM WINDOW
COLOR AS PER APPROVAL

WINDOW GLAZING =6mm THICK REF./TINTED GLASS

W4

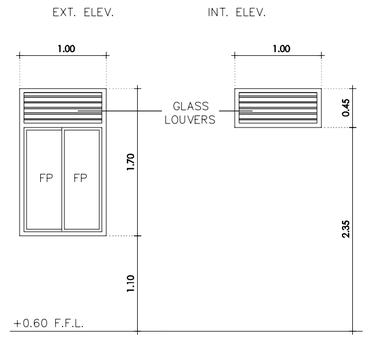

MEDIUM SECTION POWDER COATED ALUMINUM WINDOW
COLOR AS PER APPROVAL

WINDOW GLAZING =6mm THICK REF./TINTED GLASS

W5

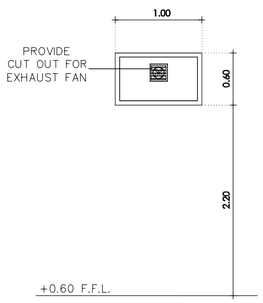

W6

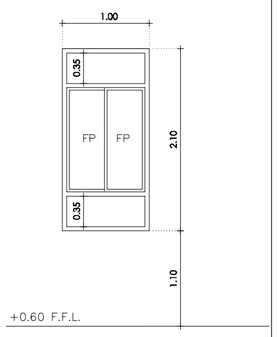

MEDIUM SECTION POWDER COATED ALUMINUM WINDOW
COLOR AS PER APPROVAL

WINDOW GLAZING =6mm THICK REF./TINTED GLASS OUTSIDE AND 6mm THICK SANDBLASTING GLASS INSIDE WITH 12mm AIRSPACE IN BETWEEN. INTERNAL WINDOWS TO BE 6mm THICK SANDBLASTED GLASS AS PER APPROVAL.

W7

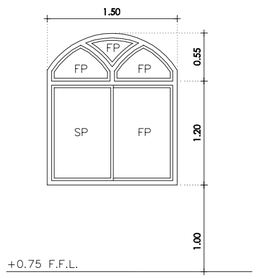

MEDIUM SECTION POWDER COATED ALUMINUM WINDOW
COLOR AS PER APPROVAL

WINDOW GLAZING =6mm THICK REF./TINTED GLASS OUTSIDE AND 6mm THICK CLEAR GLASS INSIDE WITH 12mm AIRSPACE IN BETWEEN

W8

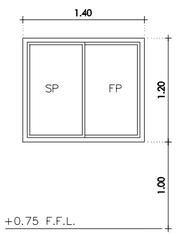

MEDIUM SECTION POWDER COATED ALUMINUM WINDOW
COLOR AS PER APPROVAL

WINDOW GLAZING =6mm THICK REF./TINTED GLASS OUTSIDE AND 6mm THICK CLEAR GLASS INSIDE WITH 12mm AIRSPACE IN BETWEEN

W9

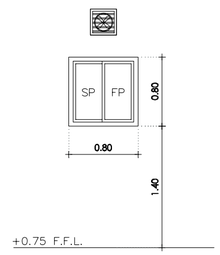

MEDIUM SECTION POWDER COATED ALUMINUM WINDOW
COLOR AS PER APPROVAL

WINDOW GLAZING =6mm THICK REF./TINTED GLASS OUTSIDE AND 6mm THICK OPAQUE GLASS INSIDE WITH 12mm AIRSPACE IN BETWEEN

W10

GENERAL DOOR/WINDOW NOTES

1- DRAWINGS ARE NOT TO BE SCALED.

2- THIS DRAWING IS TO BE READ IN CONJUNCTION WITH ALL OTHER RELEVANT DRAWINGS.

3- CONTRACTOR IS TO CONFIRM AND WORK TO ACTUAL EXIST. DIMENSIONS ON SITE.

4- ALL DIMENSIONS RELATE TO STRUCTURAL OPENINGS UNLESS OTHERWISE NOTED.

5- CONTRACTOR SHALL SUBMIT ALL NECESSARY DOOR/WINDOW SHOP DRAWINGS FOR APPROVAL PRIOR TO FABRICATION AND INSTALLATION.

6- ALL WOODEN DOORS TO HAVE ARCHITRAVES ON BOTH SIDES AS PER APPROVAL.

7- ALL FLUSH DOOR SHUTTERS SHOULD BE MIN. 75% SOLID INSIDE AS PER APPROVAL.

8- ALL ALUMINUM DOORS/WINDOWS TO HAVE ALUMINUM ARCHITRAVE BOTH SIDES AS PER APPROVAL UNLESS NOTED OTHERWISE.

9- ALL DOOR CLOSERS ARE TO HAVE 90 DEGREE HOLD OPEN FACILITY.

10- ALL EXTERNAL DOORS SHALL HAVE WEATHER SEALS.

11- ALL GLAZING BELOW 90cm ABOVE FINISH FLOOR LEVEL SHALL BE WITH TEMPERED GLASS

TIMBER OPENINGS

1- ALL DOORS SHALL BE COMPLETE WITH 1-1/2 PAIR OF BRASS HINGES (3 PAIR HEAVY DUTY FOR DOUBLE DOORS) & APPROVED QUALITY LOCKS, CLOSERS, HANDLES, BOLTS AND DOOR STOPS AS NOTED.

2- CONTRACTOR SHALL SUBMIT SAMPLES OF ALL IRON MONGERY TO BE USED FOR CONSULTANTS APPROVAL PRIOR TO PLACING AN ORDER.

3- DOOR FRAME SHALL BE SECURED TO OPENINGS WITH MIN. 3 No.'s 10mm dia. & 4" LONG EXPANDING BOLTS.

4- ALL INSIDE FACES OF TIMBER FRAMES TO BE PAINTED WITH PRESERVATIVE PAINT OF APPROVED QUALITY.

5- ALL PANELLED DOORS SHALL HAVE STILES, TOP RAIL & MIDDLE RAIL MIN. 4" WIDE. BOTTOM RAIL MIN. 8" WIDE. DECORATIVE PANELS AS/APPROVED DESIGN.

6- PROVIDE 3/4" x 9" OR 5" MARINE PLYWOOD SUBFRAMES TO ALL DOOR OPENINGS.

7- ALL FLUSH DOORS TO BE 100% SOLID CORE OR 80% SEMI-SOLID CORE WITH HARDWOOD LIPPING ALL AROUND AS PER SPECIFICATIONS.

8- PROVIDE 2" x 9" OR 2" x 5" DECORATIVE RED MERRANTI WOOD FRAME ON BOTH SIDES.

ALUMINUM OPENINGS

1- CONTRACTOR SHALL SUBMIT ALL SAMPLES OF ALL ALUM. SECTIONS, GLAZING, LOCKS, HANDLES ETC., FOR APPROVAL OF CONSULTANT PRIOR TO PLACING AN ORDER.

2- ALL ALUMINUM OPENINGS TO HAVE .75" MARINE PLY SUB-FRAME OR TREATED RED MERANTI AS/APPROVAL.

3- ALL ALUMINUM OPENINGS TO BE SEALED WITH 2 PARTS POLYSULPHIDE SEALANT MIN .25" THICK.

4- DRAINAGE WEEP HOLES TO BE PROVIDED AT THE BOTTOMS OF ALL ALUMINUM FRAMES AS PER APPROVAL.

5- ALL ALUMINUM DOORS AND WINDOW S SHALL BE COMPLETE WITH APPROPRIATE HANDLES, LOCKS, SLIDING GEAR ETC., WHICH SHALL BE OF APPROVED QUALITY AND DESIGN.

6- WHERE EVER MARINE PLY SUBFRAME IS EXPOSED PROVIDE 9/32THICK RED MERRANTI COVER SLIP (SCREWED) TO CONCEAL THE SAME/EXPOSED SURFACES TO BE TREATED WITH APP. PRESERVATIVE PAINT.

7- ALL SILL HEIGHTS ARE FROM FINISH FLOOR LEVEL UNLESS NOTED OTHERWISE.

8- FLY MESH SCREENS TO BE FROM INSIDE UNLESS NOTED OTHERWISE

GENERAL NOTES:

1. IT IS NOT ALLOWED TO REPRODUCE THE SHEETS CONTENTS IN ANY FORM EXCEPT FOR THE PURPOSE FOR WHICH IT IS INTENDED.
2. THESE DRAWINGS ARE DIAGRAMMATIC AND SHALL NOT BE SCALED. ADDITIONAL DATA SHALL BE REQUESTED FROM THE CONSULTANCY THROUGH WRITTEN CLARIFICATION. VERIFY ALL EXISTING CONDITIONS AND DIMENSIONS BEFORE PROCEEDING WITH ANY PORTION OF ANY WORK.
3. NO CHANGES, MODIFICATIONS OR DEVIATIONS SHALL BE WRITTEN PERMISSION FROM **ALMASAH ENGINEERING CONSULTANTS.**
4. ALL WORK AS OUTLINED IN THESE DOCUMENTS, SHALL STRICTLY CONFORM TO ALL APPLICABLE CODES. IN THE EVENT OF A CONFLICT, THE MORE STRINGENT REQUIREMENT SHALL GOVERN AND BE MET.

SIA - SM-01

حكومة الشارقة
دائرة الشؤون الإسلامية

CONSULTANT STAMP

المـاسـة للإستشارات الهندسية
مخططات فقط
AL-Masah
Engineering Consultant
Drawings Only

المـاسـة للإستشارات الهندسية
AL MASAH
Engineering Consultants
Sharjah 06 5 444 521 06 5 444 523 Office: 306, Al Fisal 2 Bldg., King Fisal St.

CLIENT:
GOVERNMENT OF SHARJAH - DEPARTMENT OF ISLAMIC AFFAIRS

PROJECT:
(SIA - SM-01)
PROPOSED MASJID + ABLUTION + IMAM HOUSE

SHEET TITLE:
DETAIL OF WINDOWS

ARCHITECT Arch. Mostafa Ramadan	TYPE	ARCHITECTURE
STRUCTURAL Eng : Mohamed Gomaa	SHEET No.	A - 20
CHECKED BY Eng : Mohamed Attia	Location :	
	Plot No :	
SCALE 1:100 / DATE May - 2022	Project No.	

© ALL COPYRIGHTS IS RESERVED

GENERAL NOTES.

1- ALL DIMENSIONS SHOWN ON DRAWINGS ARE IN METRIC UNITS.

2- DRAWINGS ARE NOT TO BE SCALED. ONLY WRITTEN DIMENSIONS SHALL BE FOLLOWED.

3- ANY DISCREPANCIES, OMISSIONS OR CONFLICTS IN DRAWINGS,DIMENSIONS OR OTHERWISE ARE TO BE BROUGHT TO THE ATTENTION OF(P.W.D.)ENGINEER FOR CORRECTION OR CLARIFICATION PRIOR TO COMMENCING WORKS. NO ACTIONS ARE TO BE TAKEN ON SITE UNTIL (P.W.D.) ENGINEER HAS RESOLVED ANY DISCREPANCIES OR CONFLICTS.

4- CONTRACTOR SHALL THOROUGHLY COORDINATE ARCHITECTURAL,STRUCTURAL,DRAINAGE AND A.C. DRAWINGS TO ENSURE SMOOTH SITE OPERATIONS, ALL DIMENSIONS SHALL BE CHECKED AND VERIFIED ON SITE PRIOR TO EXECUTION OF WORK.

5- THE MAIN CONTRACTOR SHALL BE RESPONSIBLE FOR THE CO-OPERATION AND QUALITY OF SUB-CONTRACTORS WORK. ALL SUB-STANDARD WORK SHALL BE DEMOLISHED AND RE-BUILT TO ACCEPTABLE STANDARDS AS REQUIRED BY (P.W.D.) WITHOUT ANY EXTRA COST.

6- ALL JUNCTIONS BETWEEN R.C. MEMBERS AND BLOCK WORK SHALL BE WITH 15cm WIDE GALVANIZED STEEL EXPANDED MESH (EXPAMET) BEFORE COVERING BY PLASTER.

7- ALL BALCONY,VERANDAH,TOILET AND KITCHEN FINISHED FLOOR LEVEL SHALL BE 2cm BELOW GENERAL FINISHED FLOOR LEVEL AND PROVIDE 5cm THICK MARBLE THRESHOLD TO BATHROOM,KITCHEN,TOILET AND ENTRANCE DOOR (FULL WIDTH OF OPENINGS) AS PER P.W.D.'S INSTRUCTION.

8- ALL LEVELS INDICATED ON DRAWINGS ARE RELATED TO 0.00 LEVEL AS DESCRIBED ABOVE OR AS OTHERWISE INDICATED ON THE ROAD WHICHEVER IS HIGHER. THIS LEVEL SHALL BE HIGHER THAN THE LEVEL IN THE CENTER OF THE FINISHED LEVEL OF THE NEAREST MAIN ROAD.

9- FINISHED GROUND FLOOR LEVEL SHALL BE MINIMUM 90cm ABOVE 0.00 LEVEL AS DESCRIBED ABOVE OR AS OTHERWISE INDICATED.

10- ALL MATERIALS USED IN CONSTRUCTION SHALL BE OF THE BEST QUALITY TO REQUIRED BRITISH OR EQUIVALENT STANDARDS AND AS APPROVED BY CONSULTANT PRIOR TO COMMENCEMENT OF WORK.

11- P.W.D. WILL HAVE THE RIGHT TO REQUEST DETAIL DRAWINGS, SHOP DRAWINGS, ETC. TO BE SUBMITTED BY CONTRACTOR FOR APPROVAL , ANY FINAL APPROVAL FOR DETAILS FOR WORKS INCLUDED OUT AS PER APPROVAL AT NO CHANGE IN COST (VARIATION) .

12- ALL KITCHEN,BATHROOMS AND TOILETS SHALL HAVE MINIMUM 20cm SUNKEN PORTION FILLED WITH DENSE LIGHT WEIGHT CONCRETE SCREED LAID OVER MINIMUM 4mm THICK TORCH WELDED POLYESTER FIBRE RENFORCED BITUMINOUS WATERPROOFING MEMBRANE OF APPROVED QUALITY AND APPLIED AS PER P.W.D.'S INSTRUCTIONS.

13- ROOF,BATHROOM,TOILET AND KITCHEN WATERPROOFING SHALL BE TESTED FOR MINIMUM 72 HOURS AND SHALL BE CHECKED BY P.W.D. PRIOR TO LAYING SCREED OVER IT.

14- ALL BLOCK WORK BELOW GROUND LEVEL,AT SILL AND JAMB TO DOOR AND WINDOW OPENING SHALL BE OF SOLID BLOCK OR CONCRETE.

15- ALL CONCRETE WORK UNDERGROUND SHALL BE THOROUGHLY PROTECTED BY 3 COATS OF APPROVED QUALITY BITUMINOUS PAINT AND 1000 GAUGE POLYTHENE SHEET AS INSTRUCTED BY P.W.D.

16- ALL BLOCK WORK SHALL COMPLY TO B.S. 2028. ALL INTERNAL,EXTERNAL BLOCK WALLS SHALL BE 20cm THICK HOLLOW CONCRETE BLOCKS UNLESS OTHERWISE INDICATED.

17-UNLESS OTHERWISE SPECIFIED ALL EXTERNAL WALLS SHALL BE RENDERED WITH MINIMUM 02cm THICK SAND /CEMENT RENDER AND ALL INTERNAL WALLS SHALL BE PLASTERED WITH MINIMUM 1.5cm THICK SMOOTH 1:4 SAND/CEMENT PLASTER USING EXPAMET PROFILES AND METAL LATH.

18- THE CONTRACTOR SHALL SUPPLY SHOP DRAWINGS SHOWING DETAILS OF SIZES AND INSTALLATION FOR DOOR,WINDOWS,KITCHEN CUPBOARDS,HAND RAILING, ENTRANCE GATE ETC. FOR CONSULTANTS APPROVALS (WITHIN 6 WEEKS FROM DATE OF COMMENCEMENT)

19- THE CONTRACTOR SHALL SUBMIT SAMPLES OF MATERIALS FROM AT LEAST 3 LOCAL (SHARJAH) SUPPLIERS FOR APPROVAL PRIOR EXECUTION OF WORK(WITHIN 6 WEEKS FROM DATE OF COMMENCEMENT)

20- THESE DRAWINGS ARE COPYRIGHT OF (P.W.D.) THESE DRAWINGS ARE NOT TO BE COPIED OR REPRODUCED WITHOUT CONSULTANT'S PERMISSION. ALL THE DRAWINGS SHALL BE RETURNED BACK TO THE P.W.D. ENGINEER ON COMPLETION OF THE JOB.

21- GROUND FLOOR CONSTRUCTION. UP TO PLINTH LEVEL SHALL BE AS FOLLOWING (UNLESS OTHERWISE SPECIFIED)

- a- TILE FLOOR FINISH AS PER SCHEDULE OF FINISHES ON:
- b- MIN. 2.5cm THICK SAND/CEMENT MORTAR BED 1:4 ON:
- c- MIN. 5cm THICK SAND/CEMENT SCREED ON:
- d- 2COATS OF HOT BITUMINOUS DAMP PROOF COURSE ON TOP OF:
- e- MIN. 10cm THICK P.C.C. 1:3:6 FLOOR SLAB REINFORCED WITH B.R.C. 193 FABRIC (T8mm BARS @20cm C.T.C. BOTH WAYS)ON:
- f- 2 LAYERS OF MIN. 1000 GAUGE POLYTHENE SHEET LAID ACROSS EACH OTHER AT RIGHT ANGLES(TURNED UP MIN. 15cm AT EACH ENDS ON:
- g- THREE LAYERS OF MIN. 15cm DEEP SABKHA LAID IN LAYERS AND WELL COMPACTED WITH MECHANICAL VIBRATOR ON:
- h- WELL COMPACTED SAND PLINTH FILLING.

22- SLOPING ROOF SLAB COVERED WITH ROOFING TILES SHALL BE PROTECTED WITH LIQUID WATER PROOFING MEMBRANE OF APPROVED QUALITY AND MAKE PRIOR TO FIXING TIMBER BATTENS AND ROOF TILES OVER IT.

23- ALL DOOR,WINDOW AND ARCH OPENINGS SHALL HAVE MIN. 2.5cm MARINE PLYWOOD SUB FRAME OF FULL WIDTH OF WALL INCASE NO SUB FRAME IN SPECIFIED INSIDE FACE OF ALL FRAMES TOUCHING WALL SHALL BE COATED WITH 2 COATS OF ANTI- TERMITE PAINT.

24- CONTRACTOR RESPONSIBLE FOR SUPPLYING SCHEDULE OF WORK FOR APPROVAL PRIOR TO STARTING CONSTRUCTION.

*- PROVIDE ALL SLIDING/OPENABLE DOORS AND WINDOW SHOULD BE IN DOUBLE GLAZED.(u=0.50)

*- ALUMINIUM SECTION TO BE THERMAL BREAKING

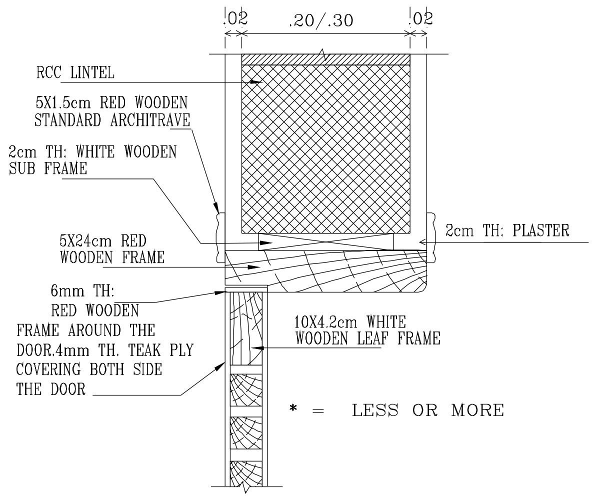

SECTIONAL DETAIL OF HOLLOW CORE DOOR

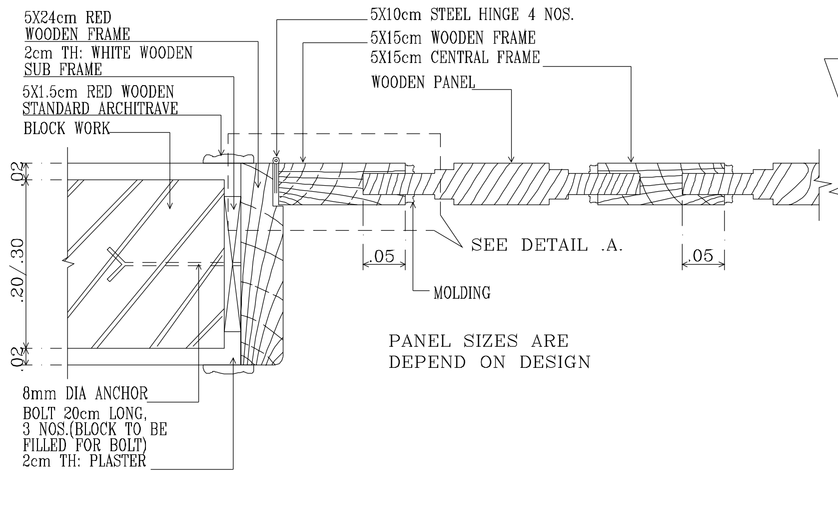

SECTIONAL DETAIL OF SOLID OR PANEL DOOR

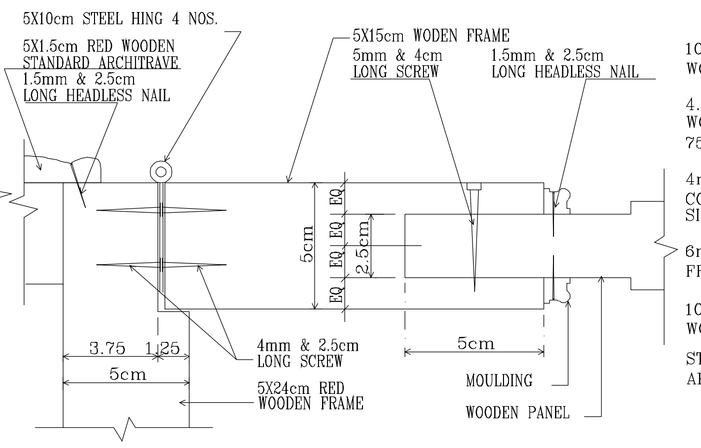

DETAIL .A.

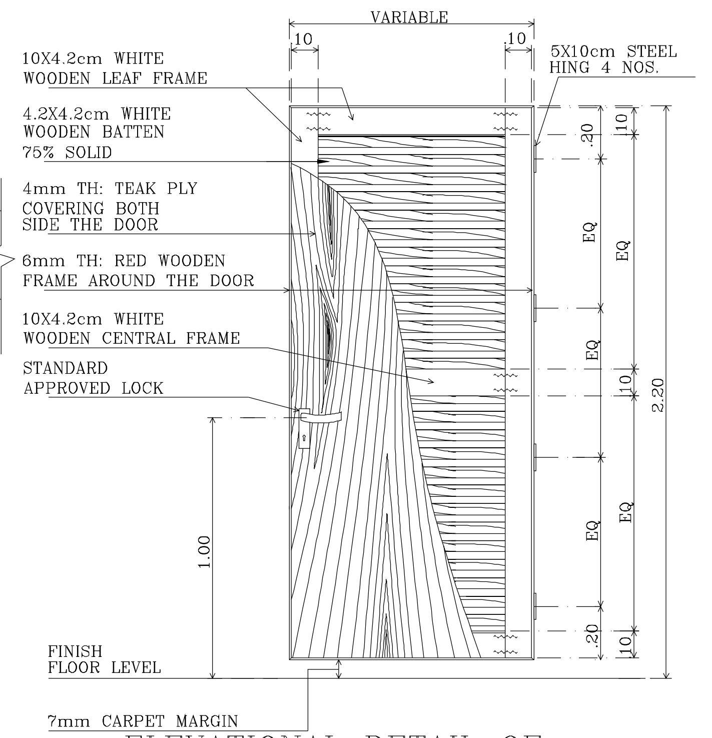

ELEVATIONAL DETAIL OF HOLLOW CORE DOOR

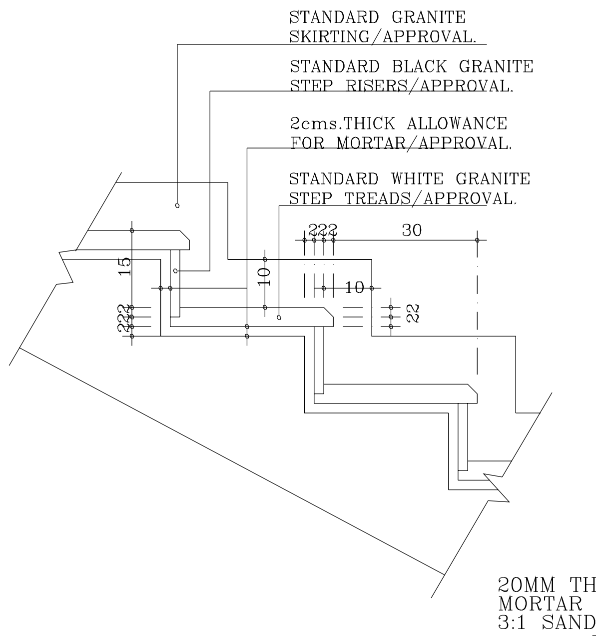

TYP: ENT: STEPS DETAIL

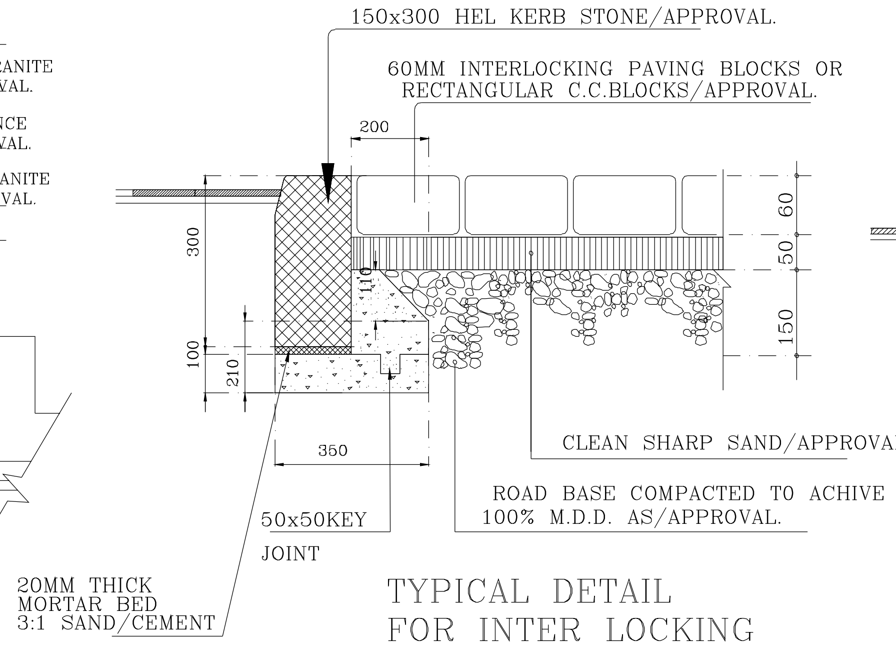

TYPICAL DETAIL FOR INTER LOCKING

PROVIDE 120 CM. WIDE INTER LOCKING ALL AROUND THE BUILDING AS/ SITE AND AS / APPROVAL OF ENGINEER.

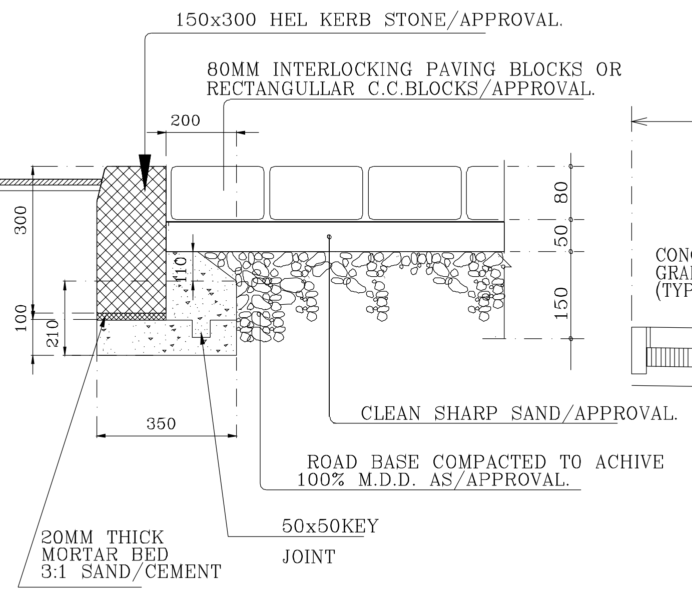

TYPICAL DETAIL FOR DRIVE WAY

NTS. (ALL DIMENSIONS IN MM.)

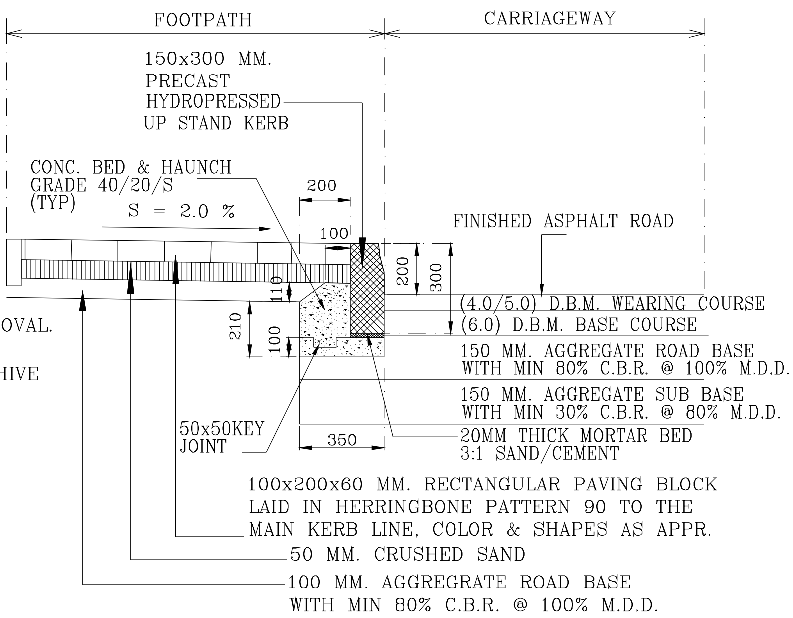

DETAIL OF FOOTPATH

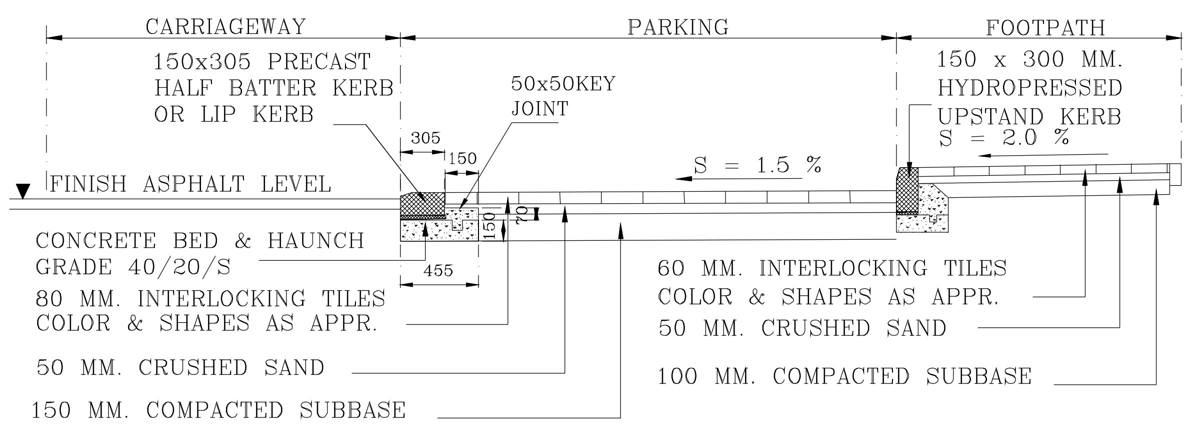

DETAIL OF FOOTPATH & PARKING

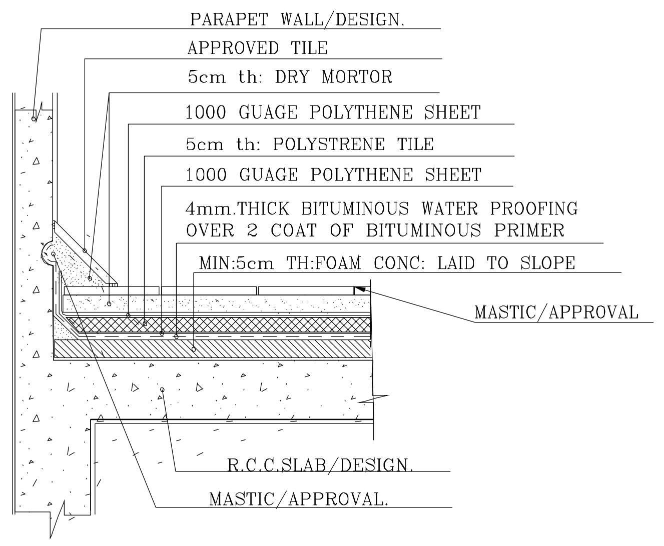

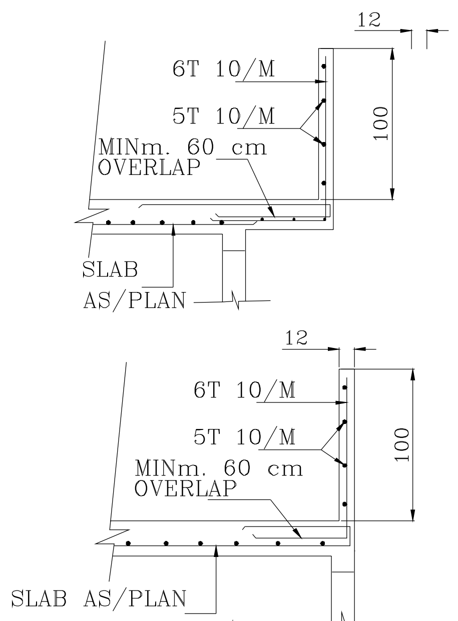

DETAIL-1

WATER PROFING

HEAT INSULATION

ROOF CALCULATION

U VALUE (R = IN SQF h/BTu)

1" TERRAZZO	R = 0.08
2" DRY CEMENT, SAND	R = 0.4
2" POLYSTYRENE (35 KG/CU.M)	R = 9.47
0.16" ASPHALT ROLL ROOFING	R = 0.024
2" LIGHT WEIGHT CONCRETE	R = 1.54
8" HEAVY WEIGHT CONCRETE	R = 0.59
TOTAL(R)= 12.104 SQ.FT h/BTu	
u=1/R OR	u = 0.08 BTu/SQ.FT h

* POLYSTYRENE FOR HEAT INSULATION OR ANY EQUIVALENT MATERIAL AS PER ENGINEER APPROVAL

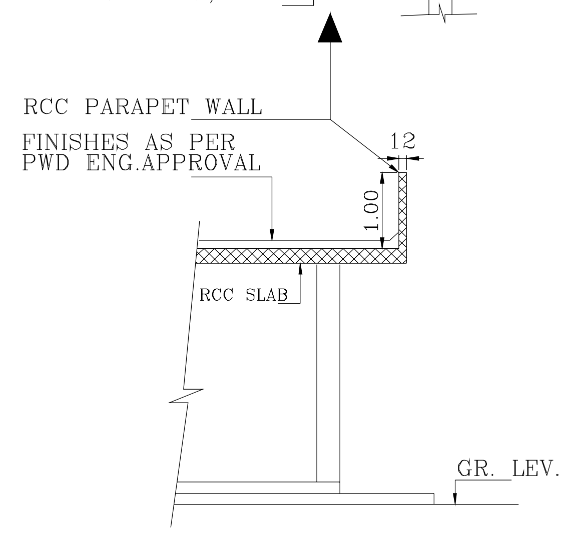

PARAPET DETAILS

THE CONSTRUCTION OF ANY MULTI STORY BUILDINGS OR VILLAS STOP THE FIRST SLAB LEVEL MUST HAVE TO PROVIDE 10CM THICK RCC PARAPET WALL FOR FUTURE CONSTRUCTION AS PER DETAIL

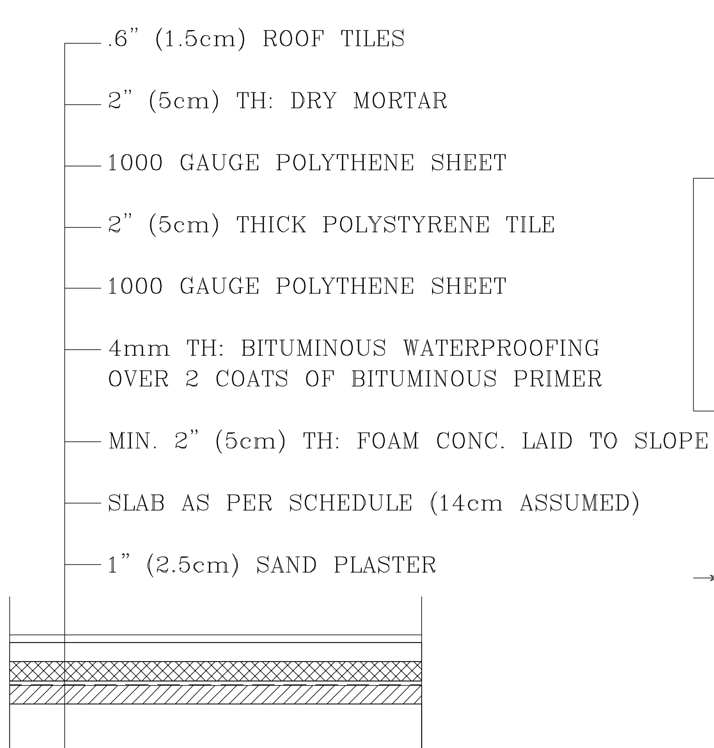

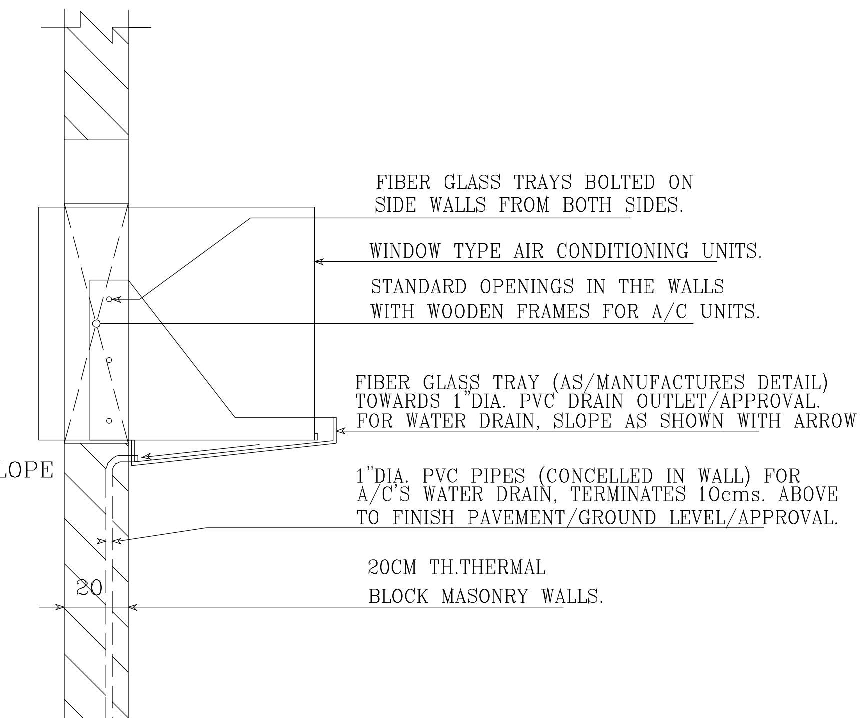

TYPICAL DETAIL FOR A/C,S DRAIN (WINDOW TYPE UNITS)

GENERAL NOTES:

1.IT IS NOT ALLOWED TO REPRODUCE THE SHEETS CONTENTS IN ANY FORM EXCEPT FOR THE PURPOSE FOR WHICH IT IS INTENDED.
2. THESE DRAWINGS ARE DIAGRAMMATIC AND SHALL NOT BE SCALED. ADDITIONAL DATA SHALL BE REQUESTED FROM THE CONSULTANCY THROUGH WRITTEN CLARIFICATION. VERIFY ALL EXISTING CONDITIONS AND DIMENSIONS BEFORE PROCEEDING WITH ANY PORTION OF ANY WORK.
3. NO CHANGES, MODIFICATIONS OR DEVIATIONS SHALL BE WRITTEN PERMISSION FROM **ALMASAH ENGINEERING CONSULTANTS.**
4. ALL WORK AS OUTLINED IN THESE DOCUMENTS, SHALL STRICTLY CONFORM TO ALL APPLICABLE CODES. IN THE EVENT OF A CONFLICT, THE MORE STRINGENT REQUIREMENT SHALL GOVERN AND BE MET.

SIA - SM-01

حكومة الشارقة
دائرة الشؤون الإسلامية

CONSULTANT STAMP

المساحة للإستشارات الهندسية مخططات فقط
AL-Masah Engineering Consultant Drawings Only

المساحة للإستشارات الهندسية
AL MASAH Engineering Consultants

Sharjah 06 5 444 521 06 5 444 523 Office: 306, Al Fisal 2 Bldg., King Fisal St.

CLIENT: GOVERNMENT OF SHARJAH - DEPARTMENT OF ISLAMIC AFFAIRS

PROJECT: (SIA - SM-01) PROPOSED MASJID + ABLUTION + IMAM HOUSE

SHEET TITLE: ARCHITECTURAL GENERAL DETAILS

ARCHITECT Arch. Mostafa Ramadan	TYPE	ARCHITECTURE
STRUCTURAL Eng : Mohamed Gomaa	SHEET No.	A - 21
CHECKED BY Eng : Mohamed Attia	Location :	
	Plot No :	
SCALE 1:100 / DATE May - 2022	Project No.	

© ALL COPYRIGHTS IS RESERVED

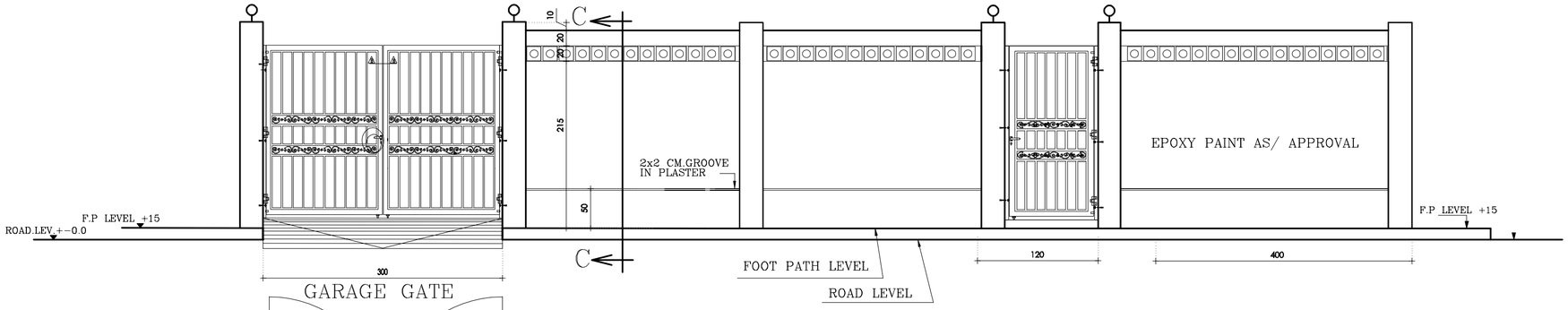

FRONT ELEVATION
SCALE = 1/50

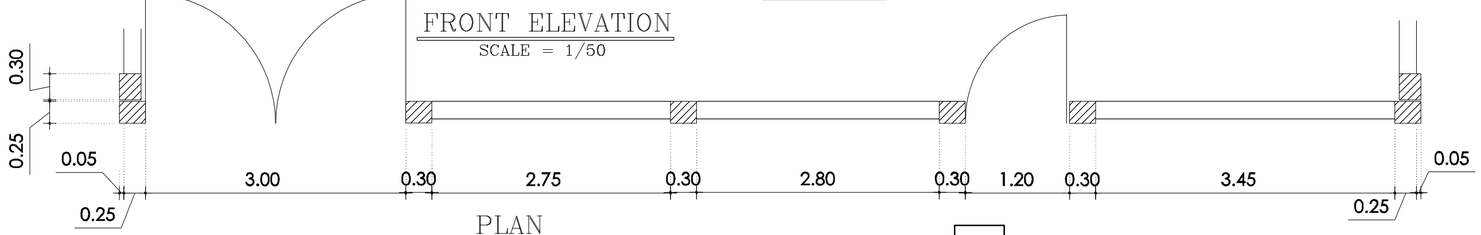

PLAN
SCALE = 1/50

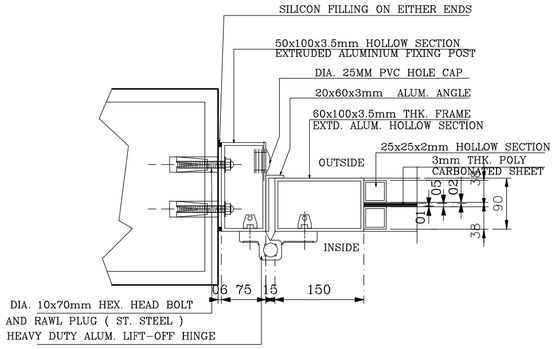

GATE FIXING DETAIL

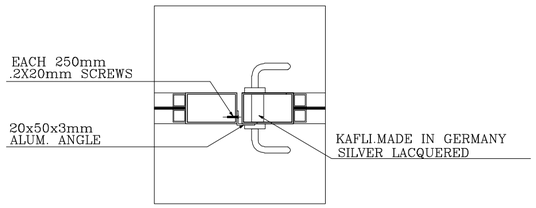

SECTION B-B

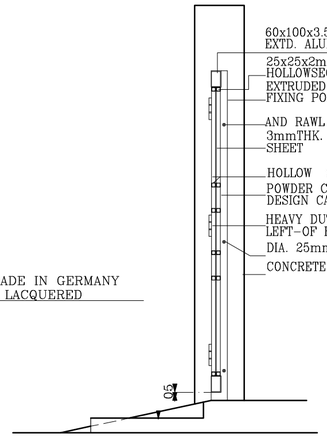

SECTION A-A

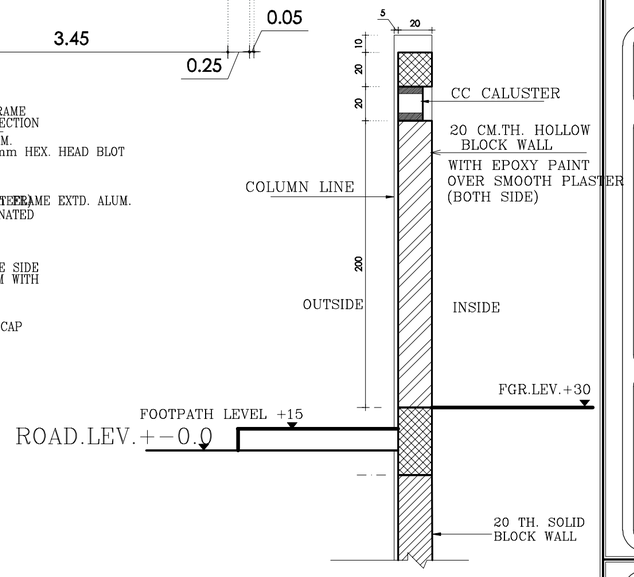

SECTION: C-C
SCALE: NTS

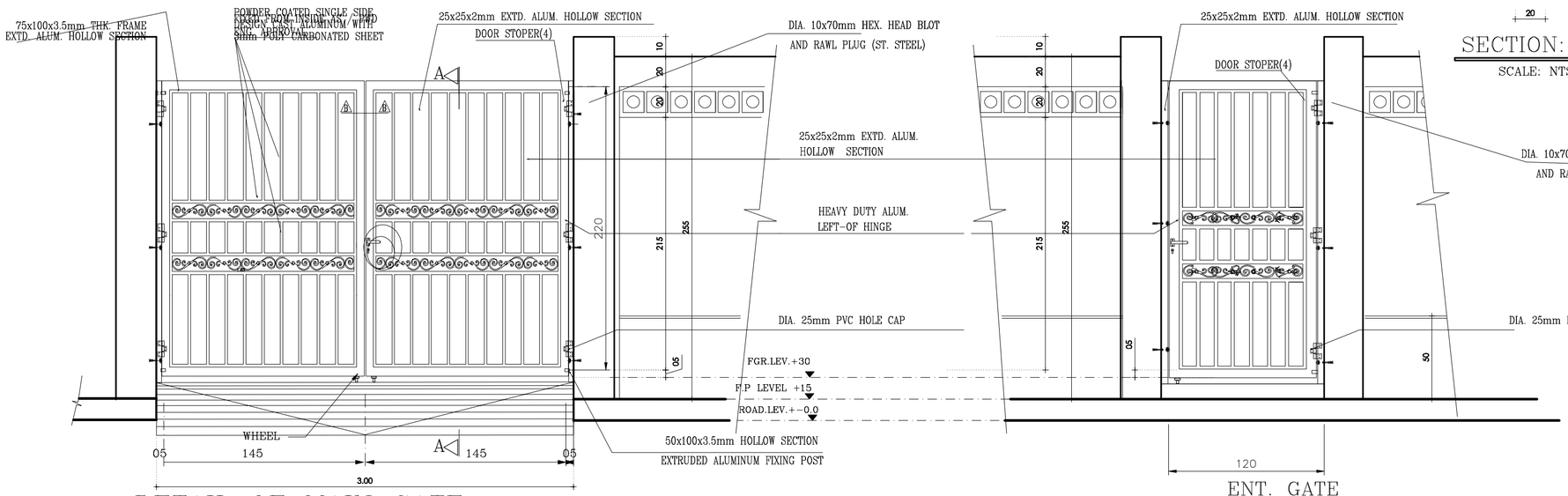

DETAIL OF MAIN GATE
ALL MATERIAL AS/DPW ENG.APPROVAL
SCALE: 1/20

ENT. GATE
SCALE = 1/20

GENERAL NOTES:

1. IT IS NOT ALLOWED TO REPRODUCE THE SHEETS CONTENTS IN ANY FORM EXCEPT FOR THE PURPOSE FOR WHICH IT IS INTENDED.
2. THESE DRAWINGS ARE DIAGRAMMATIC AND SHALL NOT BE SCALED. ADDITIONAL DATA SHALL BE REQUESTED FROM THE CONSULTANCY THROUGH WRITTEN CLARIFICATION. VERIFY ALL EXISTING CONDITIONS AND DIMENSIONS BEFORE PROCEEDING WITH ANY PORTION OF ANY WORK.
3. NO CHANGES, MODIFICATIONS OR DEVIATIONS SHALL BE WRITTEN PERMISSION FROM **ALMASAH ENGINEERING CONSULTANTS.**
4. ALL WORK AS OUTLINED IN THESE DOCUMENTS, SHALL STRICTLY CONFORM TO ALL APPLICABLE CODES. IN THE EVENT OF A CONFLICT, THE MORE STRINGENT REQUIREMENT SHALL GOVERN AND BE MET.

قطاع الهندسة والمباني
إدارة تراخيص البناء
23/05/2022
Architectural Approved
التوقيع

SIA - SM-01

حكومة الشارقة
دائرة الشؤون الإسلامية

CONSULTANT STAMP
المساسة للاستشارات الهندسية
مخططات فقط
AL-Masah Engineering Consultant
Drawings Only

المساسة للاستشارات الهندسية
AL MASAH Engineering Consultants
Sharjah 06 5 444 521 06 5 444 523 Office: 306, Al Fisal 2 Bldg., King Fisal St.

CLIENT: GOVERNMENT OF SHARJAH - DEPARTMENT OF ISLAMIC AFFAIRS			
PROJECT: (SIA - SM-01) PROPOSED MASJID + ABLUTION + IMAM HOUSE			
SHEET TITLE: IMAM HOUSE BOUNDARY WALL DETAILS			
ARCHITECT Arch. Mostafa Ramadan		TYPE	ARCHITECTURE
STRUCTURAL Eng : Mohamed Gomaa		SHEET No.	A - 22
CHECKED BY Eng : Mohamed Attia		Location :	
		Plot No :	
SCALE 1:100	DATE May - 2022	Project No.	

© ALL COPYRIGHTS IS RESERVED