Atmel SAM4S8 MCU

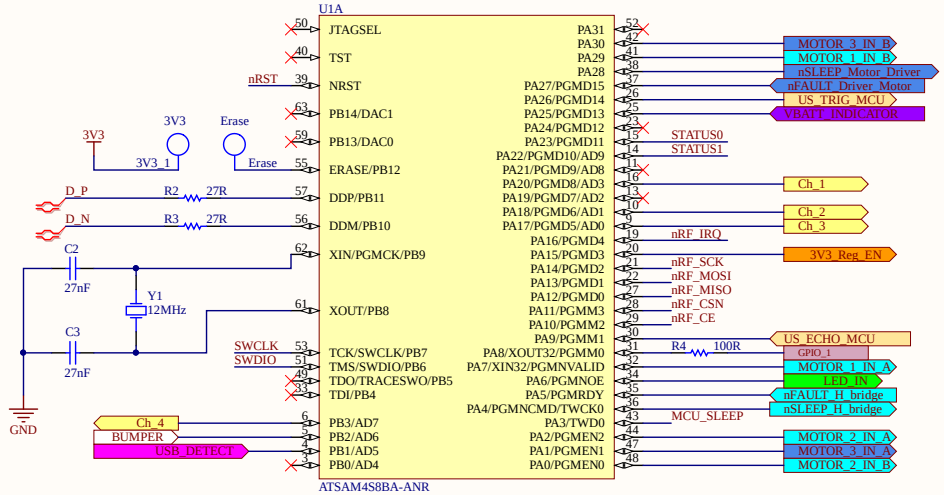

Nordic SMD Radio Module

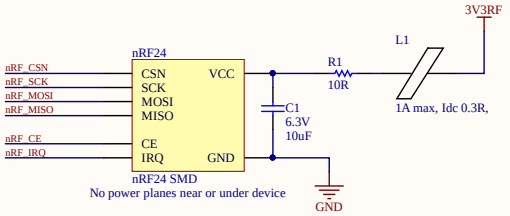

Programming

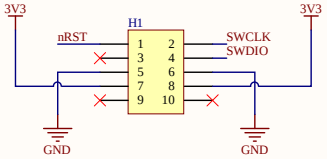

USB

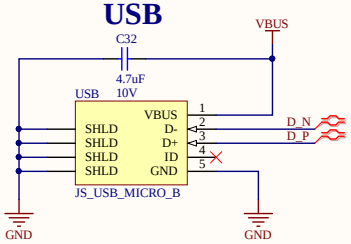

Status LEDs

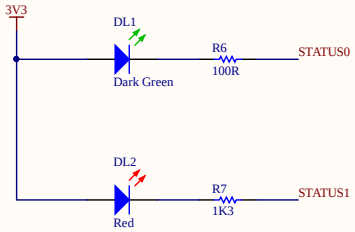

Switches

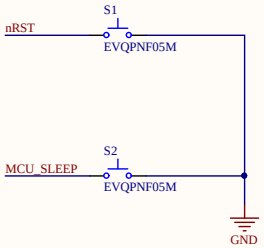

Title: *Ateml SAM4S8 MCU*		*ECE Department*
Drawn by: Hassan Alhujhoj, Abdullah Naeem	Revision: 1	*University of Canterbury*
Date: 19/03/2020 Time: 11:37:20 PM	Sheet 1 of 2	*Christchurch 8041*
File: P:\Semester1_2020\ENCE461\Term 1\wacky races\GIT\wacky-racers-2020\boardDesign\racerDesign\MCU.SchDoc		*New Zealand*

UNIVERSITY OF CANTERBURY
Te Whare Wānanga o Waitaha

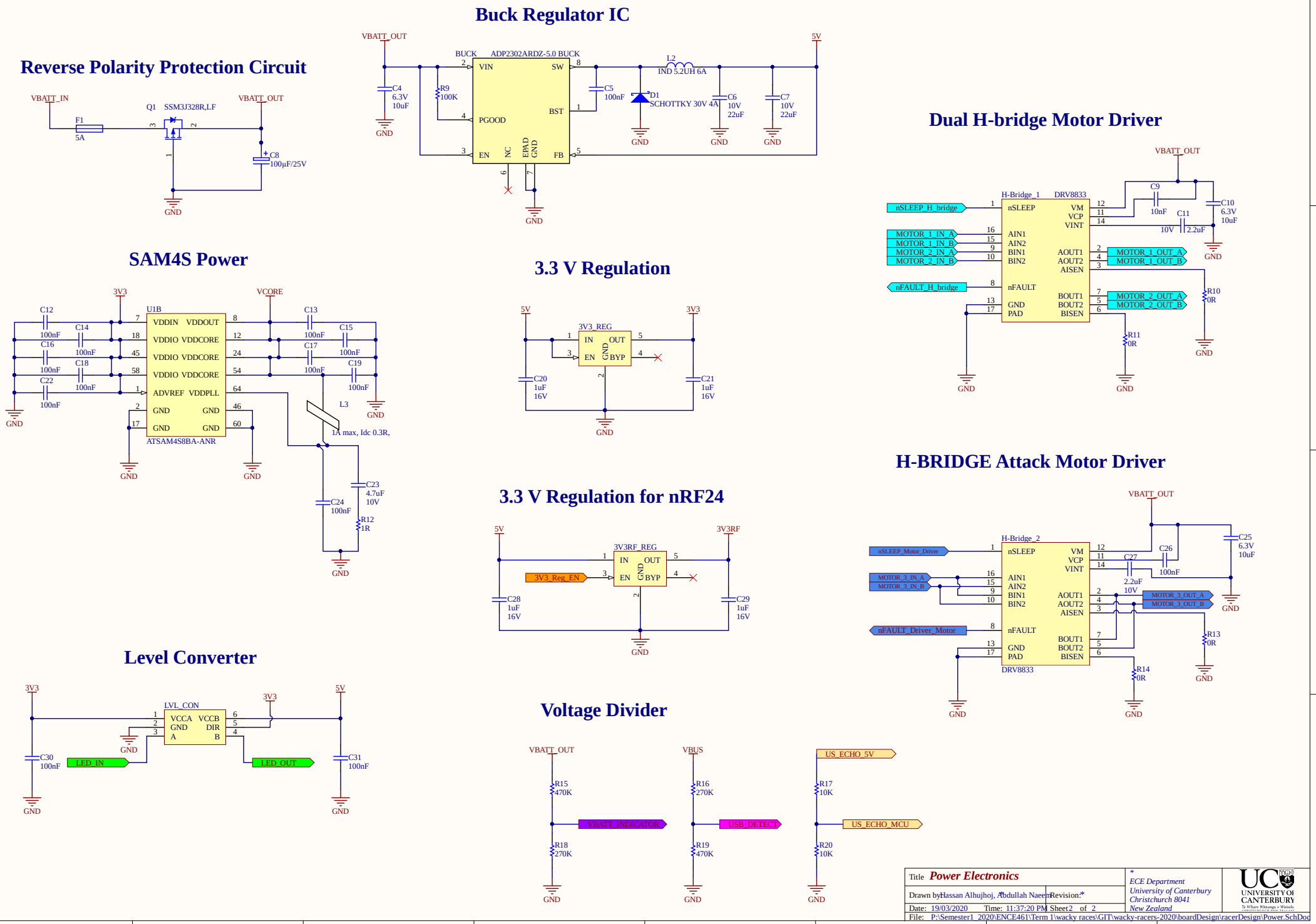
Buck Regulator IC
Reverse Polarity Protection Circuit
Dual H-bridge Motor Driver
SAM4S Power
3.3 V Regulation
H-BRIDGE Attack Motor Driver
3.3 V Regulation for nRF24
Level Converter
Voltage Divider
VBATT_OUT
5V
BUCK
ADP2302ARDZ-5.0 BUCK
VIN
SW
PGOOD
BST
EN
NC
EPAD GND
FB
L2
IND 5.2UH 6A
D1
SCHOTTKY 30V 4A
C4 6.3V 10uF
R9 100K
C5 100nF
C6 10V 22uF
C7 10V 22uF
VBATT_IN
F1 5A
Q1 SSM3J328R,LF
C8 100µF/25V
GND
H-Bridge_1
DRV8833
nSLEEP_H_bridge
MOTOR_1_IN_A
MOTOR_1_IN_B
MOTOR_2_IN_A
MOTOR_2_IN_B
nFAULT_H_bridge
nSLEEP
AIN1
AIN2
BIN1
BIN2
nFAULT
GND
PAD
VM
VCP
VINT
AOUT1
AOUT2
AISEN
BOUT1
BOUT2
BISEN
MOTOR_1_OUT_A
MOTOR_1_OUT_B
MOTOR_2_OUT_A
MOTOR_2_OUT_B
C9 10nF
C10 6.3V 10uF
C11 10V 2.2uF
R10 0R
R11 0R
3V3
VCORE
U1B
VDDIN VDDOUT
VDDIO VDDCORE
ADVREF VDDPLL
ATSAM4S8BA-ANR
C12 100nF
C14 100nF
C16 100nF
C18 100nF
C22 100nF
C13 100nF
C15 100nF
C17 100nF
C19 100nF
L3
1A max, Idc 0.3R,
C23 4.7uF 10V
C24 100nF
R12 1R
3V3_REG
IN OUT
EN BYP
C20 1uF 16V
C21 1uF 16V
3V3RF_REG
3V3_Reg_EN
3V3RF
C28 1uF 16V
C29 1uF 16V
H-Bridge_2
nSLEEP_Motor_Driver
MOTOR_3_IN_A
MOTOR_3_IN_B
nFAULT_Driver_Motor
MOTOR_3_OUT_A
MOTOR_3_OUT_B
C25 6.3V 10uF
C26 100nF
C27 2.2uF 10V
R13 0R
R14 0R
LVL_CON
VCCA VCCB
GND DIR
A B
LED_IN
LED_OUT
C30 100nF
C31 100nF
R15 470K
R18 270K
VBATT_INDICATOR
VBUS
R16 270K
R19 470K
USB_DETECT
US_ECHO_5V
R17 10K
R20 10K
US_ECHO_MCU
Title Power Electronics
Drawn by: Hassan Alhujhoj, Abdullah Naeem
Revision:
Date: 19/03/2020 Time: 11:37:20 PM Sheet 2 of 2
File: P:\Semester1_2020\ENCE461\Term 1\wacky races\GIT\wacky-racers-2020\boardDesign\racerDesign\Power.SchDoc
ECE Department
University of Canterbury
Christchurch 8041
New Zealand
UNIVERSITY OF CANTERBURY

BATT HEADER

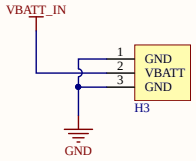

LED TAPE HEADER

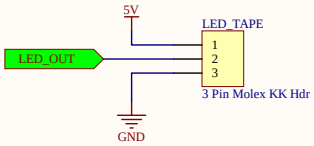

BUMPER HEADER

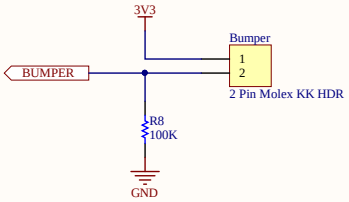

RADIO SELECTION HEADERS

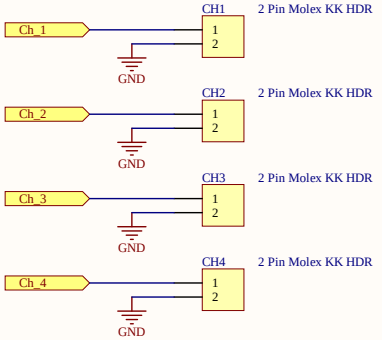

10 PIN GPIO BREAKOUT

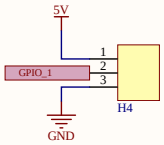

ULTRASONIC SENSOR

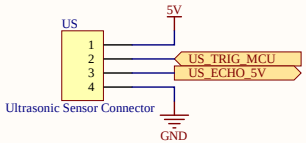

MOTOR HEADERS

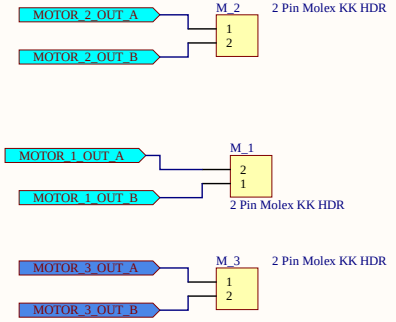

Title **Headers**		* ECE Department University of Canterbury Christchurch 8041 New Zealand
Drawn by Hassan Alhujhoj, Abdullah Naeem	Revision: *	
Date: 19/03/2020 Time: 11:37:21 PM	Sheet * of *	
File: P:\Semester1_2020\ENCE461\Term 1\wacky races\GIT\wacky-racers-2020\boardDesign\racerDesign\Headers.SchDoc		

POWER

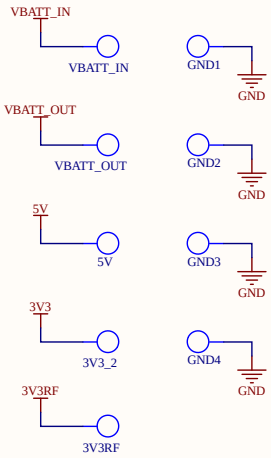

DATA

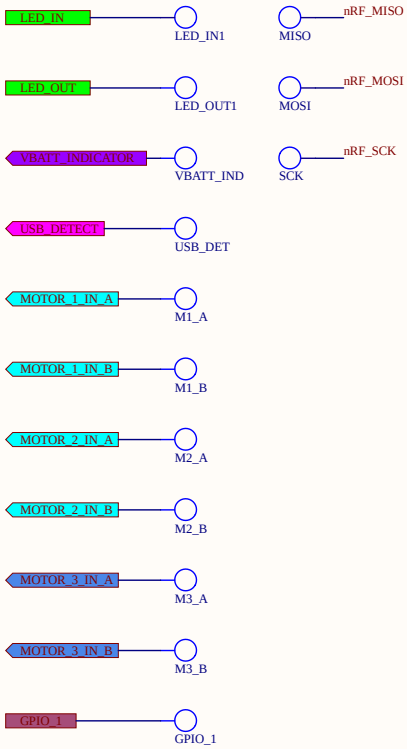

Title *Test Points*		*ECE Department* *University of Canterbury* *Christchurch 8041* *New Zealand*
Drawn by: Hassan Alhujhoj, Abdullah Naeem	Revision: 1	
Date: 19/03/2020 Time: 11:37:21 PM Sheet of		
File: P:\Semester1_2020\ENCE461\Term 1\wacky races\GIT\wacky-racers-2020\boardDesign\racerDesign\TestPoints.SchDoc		

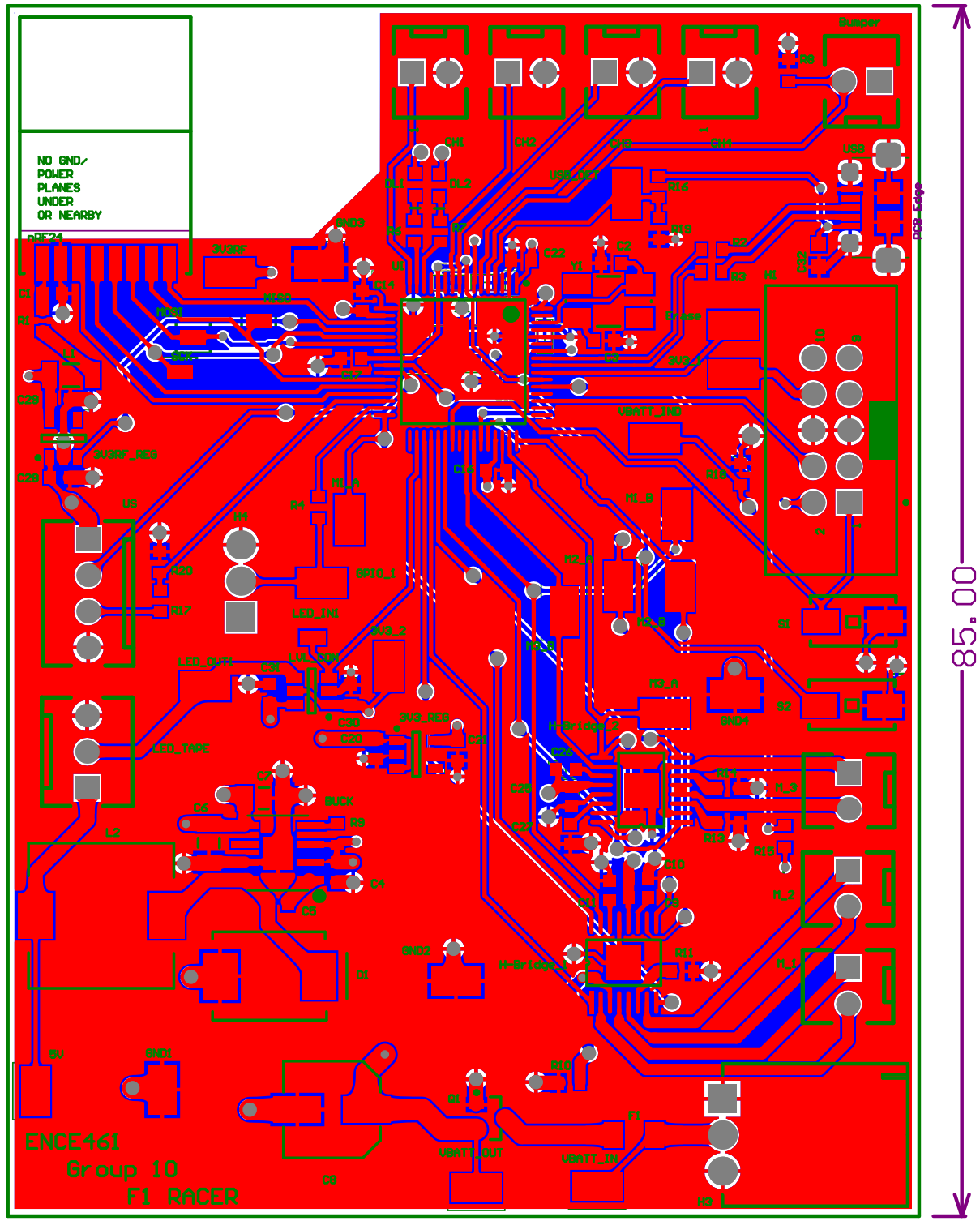
64.00
85.00
NO GND/
POWER
PLANES
UNDER
OR NEARBY
ENCE461
Group 10
F1 RACER

Board Stack Report