Contents

Chapter One

		Page
1.1	Physical Quantities and their Units	1
1.2	Dimensions of Physical Quantities	4
1.3	Application of the Method of Dimension	5
1.4	Other Sub-Units of Measurement	8
1.5	Units of Area and Volume	11
1.5.1	Some Relationships Connecting Units of Area	11
1.5.2	Some relationships connecting units of volume	11
1.6	Space, Time, Coordinate Systems and Frames of Reference	12
1.7	Vector Analysis	19
1.7.1	Introduction	19
1.7.2	Vector Algebra	20
1.7.3	The Rectangular unit Vectors $\hat{i}$, $\hat{j}$, $\hat{k}$	22
1.7.4	Resolution of Forces	23
1.7.5	The Resultant of Two or More Forces	25
1.7.6	The Resultant of Forces by the Method of Resolution	28
1.8	Vector Multiplications	31
1.8.1	The Scalar Product (or Dot Product) of Two Vectors	31
1.8.2	The Vector Cross Product	34
	Problems Set 1	37

Chapter Two

Mechanics

2.1	Basic Definitions	43
2.2	Distance, Speed, Displacement and Velocity	43
2.3	Accelerated Motion	45
2.4	Deceleration	45

Scanned by CamScanner

2.5 Motion with Constant Acceleration 46
2.5.1 Equations of Motion 46
2.5.2 Using Graphs to Describe Motion 49
2.5.2.1 Distance-Time Graph 49
2.5.2.2 Velocity-Time Graph 50
2.6 Freely Falling Bodies 54
2.7 Projectile Motion 56
2.8 Projectile on an Incline Plane 65
Problem set 2 68

Chapter Three

Newton's Laws of Motion

3.1 Newton's First Law of Motion 71
3.2 Newton's Second Law of Motion 72
3.3 The Difference Between Weight and Mass 74
3.4 Newton's Third Law 74
3.5 The Atwood Machine 78
3.6 The Law of Conservation of Momentum 80
Problems Set 3 82

Chapter Four

Statics

4.1 Forces Acting at a Point 85
4.2 Parallel Forces 90
4.2.1 The Moments of Forces 90
4.2.2 Principles of Moments 91
4.3 Friction 95
4.3.1 Coefficient of Static Friction 95
4.4 The Inclined Plane 98
Problem set 4 104

Scanned by CamScanner

Chapter five

Work, Energy and Power

5.1	Work	105
5.2	Classification of Mechanical Energy	106
5.2.1	Potential Energy	106
5.2.2	Kinetic Energy	108
5.3	Power	109
5.4	Conservative Forces	111
5.5	Relation between Conservative Forces and Potential Energy	113
5.6	Conservation of energy	114
5.7.0	Resilience and the Coefficient of Restitution	117
5.7.1	Elastic Collision	120
5.7.2	Inelastic Collision	122
5.8	Collisions in Two Dimension	123
5.9	Ballistics	125
5.10	The Rocket Equation	127
	Problems set 5	133

Chapter Six

Circular Motion

6.1	Introduction	135
6.2	Angular Speed and Velocity	136
6.3	Equations of Motion with Uniform Angular Acceleration	137
6.4	Radial Acceleration	139
6.5	Center of mass	144
6.5.1	Center of Mass for a Solid Object	146
6.6	Motion of the Center of Mass	148
6.7	Moments of Inertia	150
6.8	Moment of Inertia of Some Objects	152
6.9	Parallel–axis Theorem	152
6.10	Perpendicular Axes Theorem	158
6.11	Radius of Gyration	159
6.12	Rotational Dynamics	160

Scanned by CamScanner

6.12.1 The Torque Acting on a Particle 160
6.13 Angular Momentum of a Particle 162
6.14 Relation between Angular Momentum and Moment of Inertia 163
6.15 Relation between Torque and Angular Momentum 163
6.16 Conservation of Angular Momentum 165
6.17 Rotational Kinetic Energy 169
6.18 Work and Power in Terms of Torque 169
Problems set 6 174

Chapter 7 Gravitation

7.1 Planetary Motion 177
7.2 The Mass of the Earth 178
7.3 Variations in Acceleration due to Gravity 179
7.4 The motions of Planets and Satellite 183
7.5 The Mass of the Sun 188
7.6 Gravitational Field 190
7.7 Gravitational Potential Energy 191
7.8 Escape Velocity 191
Problems set 7 194

Chapter 8 Simple Harmonic Motion

8.1 Introduction 197
8.2 Damping and Free Oscillations 198
8.3 Restoring Forces and Potential Functions 198
8.4 Energy Considerations in Simple Harmonic Motion 201
8.5 The Torsional Pendulum 213
8.6 The Physical Pendulum 216
8.7 Damped Harmonic Motion 218
Problems Set 8 224

Scanned by CamScanner

Greek Letters Used As Symbols

Name	Lower Case (Small letters)	Upper Case (Capital letter)	Transliteration
Alpha (alfa)	α	A	A
beta (beeta)	β	B	b
gamma (gamma)	γ	Γ	g
delta (delta)	δ	Δ	d
epsilon (epsilon)	ε	E	e (short)
zeta (zeta)	ζ	Z	z
eta (eta)	η	H	e (long)
theta (theta)	θ	Θ	th
iota (ayota)	ι	I	I
kappa (kappa)	κ	K	k
lambda (lamda)	λ	Λ	L
mu (miyu)	μ	M	m
nu (niyu)	ν	N	n
xi (zay)	ξ	Ξ	x
Omicron (omikron)	ο	O	o (short)
pi (pai)	π	Π	p
rho (ro)	ρ	P	r
sigma (sigma)	Σ	σ	s
tau (tau)	τ	T	t
upsilon (upsilon)	υ	Y	u
phi (fai)	φ	Φ	ph
chi (kai)	χ	X	ch
psi (sai)	ψ	Ψ	ps
omega (omega)	ω	Ω	o (long)

Scanned by CamScanner

CHAPTER ONE

1.1 Physical Quantities and their Units

A physical quantity–length, time, volume, for instance, is something that can be measured by some strictly definable process. The result of that measurement is termed the ***magnitude*** of the quantity, and it may be expressed by the relation

$$Q = nU$$

where U represents a ***suitable sample*** of the quantity concerned and is called the ***unit***, n is termed the ***numeric*** and is the number of times that the unit must be used to make up the magnitude in question. One **second**, for example is a suitable sample of the quantity called **time**. It is defined in terms of the "atomic clock", which involves radiation from a Cesium–133 atom:

The second is the duration of 9,192,631,770 periods of the radiation corresponding to the transition between the two hyperfine levels of the ground state of the Cesium-133 atom.

Thus, if the time taken for an object to travel a certain distance is 30 seconds, then the magnitude of the time taken is 30 seconds. In this case n = 30 and the unit U is the second. Clock and watches of various designs are mechanisms that measure time. Their scales of measurement are standardized relative to the second.

The **meter** is the fundamental unit of length. In 1960 the **meter** was standardized by international agreement in terms of the wavelength of radiation emitted by krypton–86 atom under specified conditions. In November 1983 a new definition for the meter was given. It is defined as the length of the path traveled by light in a vacuum during a time interval of $\frac{1}{299\,792\,458}$ of a second, where 299,792,458 m/s is the speed of light in vacuum.

Similarly the **kilogram** is the fundamental unit of mass. One kilogram is the mass of a particular cylinder of platinum–iridium alloy kept at the international Bureau of Weights and Measures at Sevres near Paris, the capital of France.

Scanned by CamScanner

If the mass of an object is 40 kg, we say that the magnitude of the mass is 40 kg. This means that this object is 40 times greater in mass than the standard mass. We use chemical balance to measure the mass of an object.

Physical Quantities can be divided into ***Fundamental Quantities*** and ***Derived Quantities***. Fundamental quantities are those whose defining operations are not based on the measurements of other physical quantities. That is to say the magnitudes of these quantities are normally defined without reference to any other quantity. Examples of fundamental quantities are ***Length***, ***Time*** and ***Mass***. Their respective units, Meter, Second and Kilogram, are called ***fundamental units***. Other examples of fundamental quantities are the **Electric Current, Thermodynamic temperature, amount of substance** and **luminous intensity**.

The **unit of Electric Current** is the ***Ampere (A)***. The ampere is that constant current that, if maintained in two straight parallel conductors of infinite length, of negligible circular cross section, and placed 1 m apart in vacuum, would produce between these conductors a force equal to 2×10^{-7} Newton per meter (N/m) of length.

The **unit of Thermodynamic Temperature** is the **Kelvin (K)**. The Kelvin is defined as the fraction $\frac{1}{273.16}$ of the thermodynamic temperature of the triple point of water.

The **Amount of substance** is expressed in **Mole.** The mole is defined as the amount of substance of a system that contains, as many elementary entities as there are carbon atoms in 0.012kg of carbon 12. The elementary entities must be specified and may be atoms, molecules, ions, electrons, other particles or specified groups of such particles.

Luminous intensity is expressed in **Candela (Cd)**. The candela is the luminous intensity, in a given direction, of a source that emits monochromatic radiation of frequency 540×10^{12} Hertz and that has a radiant intensity in that direction of 1/683 Watt per Steradian.

Scanned by CamScanner

Derived quantities are those quantities whose magnitudes are defined in terms of the magnitudes of the fundamental quantities. Examples of derived quantities are velocity, acceleration, force, volume and area. Their units are called **derived units**. We obtain the units of a derived quantity by first expressing it in terms of fundamental quantities. Here are some examples:

(i) **Velocity:** Velocity is obtained by dividing the magnitude of Displacement by the magnitude of the time interval:

$$\text{Velocity} = \frac{\text{Change in Displacement}}{\text{Time}} = \frac{\text{Length}}{\text{Time}}$$

$$\text{Unit of velocity} = \frac{\text{Unit of Length}}{\text{Unit of Time}} = \frac{\text{meter}}{\text{second}} = \frac{m}{s} = m/s$$

(ii) **Acceleration:** Acceleration is obtained by dividing the change in velocity by the time interval:

$$\text{Acceleration} = \frac{\text{Velocity change}}{\text{Time}}$$

$$\therefore \text{Unit of acceleration} = \frac{\text{Unit of velocity}}{\text{Unit of Time}} = \frac{m/s}{s} = m/s^2$$

(iii) **Force:** The force acting on an object is obtained by multiplying the mass of the object by the acceleration produced:

$$\text{Force} = \text{Mass x acceleration}$$

$$\therefore \text{Unit of Force} = \text{Unit of mass x Unit of acceleration}$$

$$= \text{kilogram x metre (second)}^{-2} = kg\ ms^{-2}$$

(iv) **Volume:** Volume is obtained from

$$\text{Volume} = \text{length x breadth x height}$$

$$\therefore \text{Unit of volume} = \text{unit length x unit breadth x unit of height}$$

$$= \text{metre x metre x metre} = (\text{metre})^3 = m^3$$

Scanned by CamScanner

(v) **Density**: The Density of an object is obtained by dividing its mass by its volume:

$$\text{Density} = \frac{\text{Mass}}{\text{Volume}}$$

$$\therefore \text{Unit of density} = \frac{\text{Unit of Mass}}{\text{Unit of Volume}} = \frac{\text{Kilogram}}{\text{Metre}^3} = \text{kg m}^{-3}$$

1.2 Dimensions of Physical Quantities

The dimension of a physical quantity is the way the quantity is expressed in terms of the fundamental quantities, Mass (M), Length (L) and Time (T).

We obtain the dimension of a quantity by first writing the formula for that quantity and then expressing each quantity contained in the formula in terms of the fundamental quantities. When we enclosed a quantity in a bracket [ ], we mean the dimension of that quantity. For example, [velocity] means the dimension of velocity.

Example 1.1: Obtain the dimension of: (i) velocity (ii) acceleration (iii) force.

Solution:

(i) $\text{Velocity} = \dfrac{\text{Change in Displacement}}{\text{Time}}$

$$\therefore [\text{velocity}] = \frac{\text{Dimension of Displacement}}{\text{Dimension of Time}} = \frac{\text{Length}}{\text{Time}} = \frac{L}{T} = LT^{-1}$$

(ii) $$[\text{Acceleration}] = \frac{[\text{velocity}]}{[\text{time}]} = \frac{LT^{-1}}{T} = LT^{-2}$$

(iii) Force = mass x acceleration

$$[\text{Force}] = [\text{mass}] \times [\text{acceleration}]$$

$$= (M)(LT^{-2}) = MLT^{-2}$$

Scanned by CamScanner

1.3 Applications of the Method of Dimension

The method of dimension can be used to test or find the form of an expression.

Example 1.2 :

By dimension, find the form of the expression for the period of vibration of a simple pendulum.

Solution:

Suppose that the period T of oscillation depends only on the mass m of the bob, the length l of the thread and the acceleration due to gravity g, fig. 1.1. Hence,

$$T \propto m^x$$

$$T \propto l^y$$

$$T \propto g^z$$

This means that

$$T \propto m^x l^y g^z$$

$$\therefore T = k m^x l^y g^z \quad \text{----------} \quad (1.1)$$

Fig. 1.1

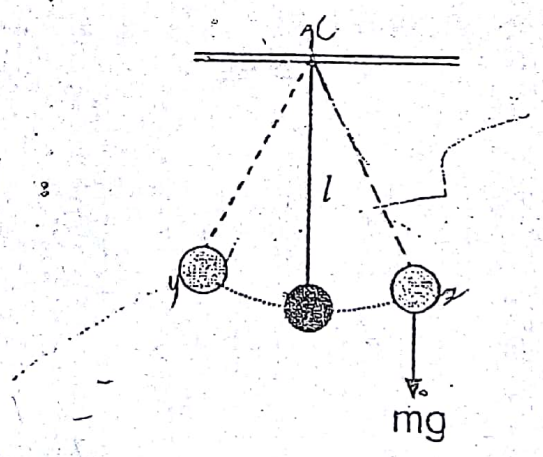

Now, the dimension of T is T;
the dimension of k =1, since it is a constant;
the dimension of m = M;
the dimension of l = L; the dimension of g = LT^{-2}.

Scanned by CamScanner

Substituting these into equation (1.1), we have

$$T=1.M^{x}L^{y}(LT^{-2})^{z}$$
$$T^{1}=M^{x}L^{y}L^{z}T^{-2z}$$

Equating indices of T, M and L on both sides we have

$$1=-2z \quad \text{----------} \quad (1.2)$$
$$0=x \quad \text{----------} \quad (1.3)$$
$$0=y+z \quad \text{----------} \quad (1.4)$$

Solving these equations simultaneously, we have $z=-\frac{1}{2}$, $x=0$, $y=-z=\frac{1}{2}$.

Therefore, the formula for the period T of vibration of a simple pendulum is

$$T=k\,m^{x}l^{y}g^{z}=km^{0}l^{\frac{1}{2}}g^{-\frac{1}{2}}$$

$$\therefore\ T=k\sqrt{\frac{l}{g}}$$

Experimental results show that k is approximately equal to 2π.

$$\therefore\ T=2\pi\sqrt{\frac{l}{g}}$$

Example 1.3:

A body moving through the air at a speed v experiences a retarding force F giving by

$$F=kA\rho V^{x}$$

where A is the surface area of the body, ρ is the density of air and k is a numerical constant. Find the value of x and the expression for F.

Solution:

The given formula is

$$F=kA\rho V^{x} \quad \text{----------} \quad (1.5)$$

Dimension of F = [F] = [m][a] = MLT^{-2},

Scanned by CamScanner

Dimension of k = [k] = 1,
Dimension of Area A = [A] = [length] x [breadth] = L x L = L^2

Density $\rho = \dfrac{\text{Mass}}{\text{Volume}}$

$\therefore$ Dimension of Density $= \dfrac{\text{Dimension of Mass}}{\text{Dimension of Volume}} = \dfrac{M}{L^3} = M.L^{-3}$,

Dimension of velocity = LT^{-1}.

Expressing equation (1.5) in dimensional form, we have

$$M\,LT^{-2} = L^2\,M\,L^{-3}\,(LT^{-1})^x$$
$$= L^2\,M\,L^{-3}\,L^x\,T^{-x} = L^{2-3+x}\,M\,T^{-x}$$

Equating indices of M, L, T on both sides, we have

Equating indices of L: $1 = 2 - 3 + x$ ---------- (1.6)
Equating indices of T: $-2 = -x$ ---------- (1.7)

From equation (1.6), x = 2. Hence, $F = kA\rho V^2$

Example 1.4:

A particle of mass m attached to a string of length r is whirled round in a circle with a speed v. Find the form of the expression for the tension in the string.

Solution:

It is reasonable to suppose that the tension F depends on m, v and r, but on no other quantities. Then

$$F \propto m^x\,v^y\,r^z$$
$$\therefore F = k\,m^x\,v^y\,r^z \quad \text{---------- (1.8)}$$

where k is a constant of proportionality.

Taking the dimension of both sides of equation (1.8), we have

$$MLT^{-2} = (1)M^x(LT^{-1})^y\,L^z$$

$$\therefore MLT^{-2} = M^x\,L^{y+z}\,T^{-y}$$

Scanned by CamScanner

Equating indices of M, L and T on both sides, we have

for M, $1 = x$ (1.9)

for L, $1 = y + z$ (1.10)

for T, $-2 = -y$ (1.11)

Solving these equations simultaneously, we have $x = 1$, $y = 2$ and $z = -1$.

$$\therefore T = kmv^2r^{-1} = \frac{mv^2}{r},$$ where k is found to be 1.

1.4 Other Sub-Units Of Measurement

Let us assume that a length of 1 m is divided into 10 equal parts as shown below.

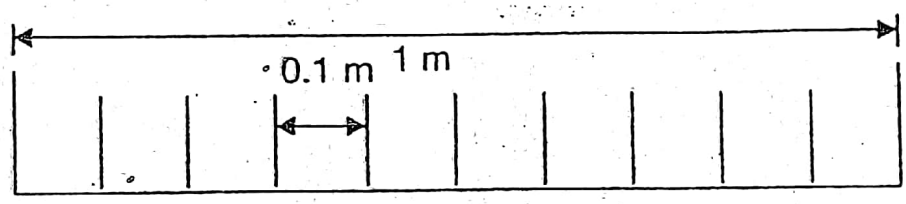

Each part has a length of $\frac{1}{10}$ m. In scientific notation, $\frac{1}{10} = 0.1$ is called ***deci***. Thus in the above diagram, there are 10 decimeter in 1 m.

Now, if we divide 1 m into 100 equal parts, each part will have a length of $\frac{1}{100}$ m.

Similarly, $\frac{1}{100} = 10^{-2}$ is given the name ***centi***. So, there are 100 cm in 1m.

If the 1 m is now divided into 1000 equal parts, each part will have a length of $\frac{1}{1000}$ m $= 10^{-3}$ m. In the same manner, $\frac{1}{1000}$ or 10^{-3} is called ***milli***. Hence, there are 1000 mm in 1 m.

In most astronomical measurements, distances when expressed in metres are very large indeed. For example, the distance from the earth to **Alpha Centauri**, the nearest star to the earth, is 4.07×10^{16} m. To deal with such enormous distances, the Light-Year and the Astronomical Units are used.

Scanned by CamScanner

The **light-year** is the distance that light will travel (at the speed of 3×10^8 m/s) during 1 year.

Now, 1year = 365.25 days = 365.25 x 24 hours = 365.25 x 24 x 60 minutes
= 365.25 x 24 x 60 x 60 seconds = 3.156×10^7 s

∴ distance traveled by light in 1 year = speed of light x time
$= 3 \times 10^8 \times 3.156 \times 10^7$ m = 9.46×10^{15} m

∴ 1 light year = 9.46×10^{15} m.

The **Astronomical Unit (A.U)** is defined to be the mean distance from the Earth to the sun. This distance is equal to 1.496×10^{11} m. Table 1–1 gives some common multiples of 10 and their prefixes.

TABLE 1-1: Prefixes for Powers of 10

Multiple	Prefix	Symbol	Short scale	Decimal equivalent in SI writing style
10^{24}	yotta	Y	Septillion	1 000 000 000 000 000 000 000 000
10^{21}	zetta	Z	Sextillion	1 000 000 000 000 000 000 000
10^{18}	exa	E	Quintillion	1 000 000 000 000 000 000
10^{15}	peta	P	Quadrillion	1 000 000 000 000 000
10^{12}	tera-	T	Trillion	1 000 000 000 000
10^{9}	giga-	g	Billion	1 000 000 000
10^{6}	mega-	m		1 000 000
10^{3}	kilo-	k		1 000
10^{2}	hecto-	h		100
10	deka-	da		10
10^{-1}	deci-	d		0.1
10^{-2}	Cent-	c		0.01
10^{-3}	Milli	m		0.001
10^{-6}	micro-	μ		0.000 001
10^{-9}	Nano-	n	Billionth	0.000 000 001
10^{-12}	Pico-	p	Trillionth	0.000 000 000 001
10^{-15}	femto-	F	Quadrillionth	0.000 000 000 000 001
10^{-18}	atto-	a	Quintillionth	0.000 000 000 000 000 001
10^{-21}	zepto	z	Sextillionth	0.000 000 000 000 000 000 001
10^{-24}	yocto	y	Septillionth	0.000 000 000 000 000 000 000 001

Scanned by CamScanner

Example 1.5

The distance to Alpha Centauri is $4{:}07 \times 10^{16}$ m. What is this distance when expressed in (i) Light-Years and (ii) Astronomical Units?

Solution

(i) Let 4.07×10^{16} m = y light years

$$1 \text{ light-year} = 9.46 \times 10^{15} \text{ m}$$
$$\therefore y \text{ light-year} = 4.07 \times 10^{16} \text{ m}$$

Cross-multiplying, we have

$$1 \text{ light-year} \times 4.07 \times 10^{16} \text{ m} = y \text{ light-year} \times 9.46 \times 10^{15} \text{ m}$$

$$\therefore y = \frac{\text{light-year} \times 4.07 \times 10^{16} \text{ m}}{\text{light-year} \times 9.46 \times 10^{15} \text{ m}} = 4.30.$$

Therefore, alpha Centauri is 4.30 light-years from the earth.

(ii) Let 4.07×10^{16} m = y A.U. Then,

$$1 \text{ A.U} = 1.496 \times 10^{11} \text{ m.}$$
$$y \text{ A.U} = 4.07 \times 10^{16} \text{ m.}$$

Cross-multiplying we have

$$1 \text{ A.U} \times 4.07 \times 10^{16} \text{ m} = y \text{ A.U} \times 1.496 \times 10^{11} \text{ m.}$$

$$\therefore y = \frac{\text{A.U} \times 4.07 \times 10^{16} \text{ m}}{\text{A.U} \times 1.496 \times 10^{11} \text{ m}} = 2.72 \times 10^{5}$$

Other relations connecting units of length are:

1 inch = 2.54 cm
1 yard = 0.9144 m
1 mile = 1.609 km
1 foot = 12 inches
1 galileo = 10^{-2} m/s^2
1 U.S. gal = 3.785 litres
1 imperial gal = 4.546 litres

Scanned by CamScanner

1.5 Units of Area and Volume

1.5.1 Some Relationships Connecting Units of Area

The relationships between square centimeter (cm^2) and square metre (m^2) can be obtained as follows:

$$100 \text{ cm} = 1 \text{ m}$$

Squaring both sides, we have

$$(100 \text{ cm})^2 = (1 \text{ m})^2$$
$$\therefore 10000 \text{ cm}^2 = 1 \text{ m}^2$$
$$\therefore \mathbf{10^4 \text{ cm}^2 = 1 \text{ m}^2}$$

Similarly,

$$1000 \text{ mm} = 1 \text{ m}$$

Squaring both sides, we have

$$(1000 \text{ mm})^2 = (1 \text{ m})^2$$
$$\therefore 1000000 \text{ mm}^2 = 1 \text{ m}^2$$
$$\therefore \mathbf{10^6 \text{ mm}^2 = 1 \text{ m}^2}$$

1.5.2 Some Relationships Connecting Units of Volume

The relationships between centimeter cube (cm^3) and metre cube (m^3) can be obtained as follows:

$$100 \text{ cm} = 1 \text{ m}$$

If we cube both sides, we have

$$(100 \text{ cm})^3 = (1 \text{ m})^3$$
$$\therefore 1000000 \text{ cm}^3 = 1 \text{ m}^3$$
$$\therefore \mathbf{10^6 \text{ cm}^3 = 1 \text{ m}^3}$$

Similarly,

$$1000 \text{ mm} = 1 \text{ m}$$

Cubing both sides, we have

$$\therefore \mathbf{10^9 \text{ mm}^3 = 1 \text{ m}^3}$$

Scanned by CamScanner

Example 1.6: Convert 30.02 mm^3 to m^3

Solution: Let 30.02 $mm^3 = ym^3$. Then

$$10^9\ mm^3 = 1\ m^3$$
$$30.02\ mm^3 = y\ m^3$$

Cross-multiplying, we have

$$10^9\ mm^3 \times y\ m^3 = 30.02\ mm^3 \times 1m^3$$

$$\therefore y = \frac{30.02\ mm^3 \times 1m^3}{10^9\ mm^3 \times 1\ m^3} = 30.02 \times 10^{-9}$$

$$\therefore 30.02\ mm^3 = 30.02 \times 10^{-9}\ m^3$$

1.6 Space, Time, Coordinate Systems and Frames of Reference

In this section we are interested in knowing the **positions** as well as motions of bodies in **Space**. Suppose we represent a body in an abstract manner by means of a collection of points in a 3–dimensional Euclidean Space, i.e. point P(x, y, z) in fig.1.2.

Each point in the 3-dimensional Euclidean Space is specified by an ordered set of three real numbers, (x, y, z), which represent the **coordinates** of that point. Each of these points has a unique set of coordinates relative to a given **Coordinate System**.

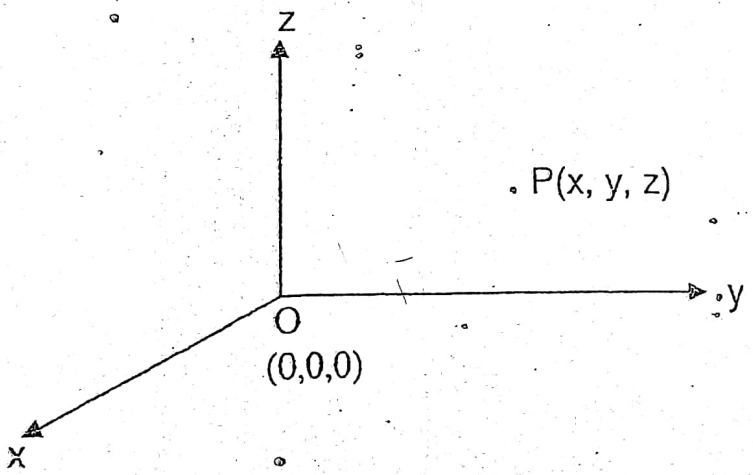

Fig.1.2

Scanned by CamScanner

A coordinate system consists of an **origin** and **coordinate surfaces**, which a given coordinate is held fixed and the other two coordinates are allowed to vary. The simplest example of a coordinate system is the Cartesian Coordinate System, fig. 1.3. Point O is the origin and has coordinates (0, 0, 0). The coordinate surfaces are the y-z plane, x-z plane and x-y plane. Point A has coordinates (x_1, y_1, z_1), while B has coordinates (x_2, y_2, z_2).

Fig.1.3

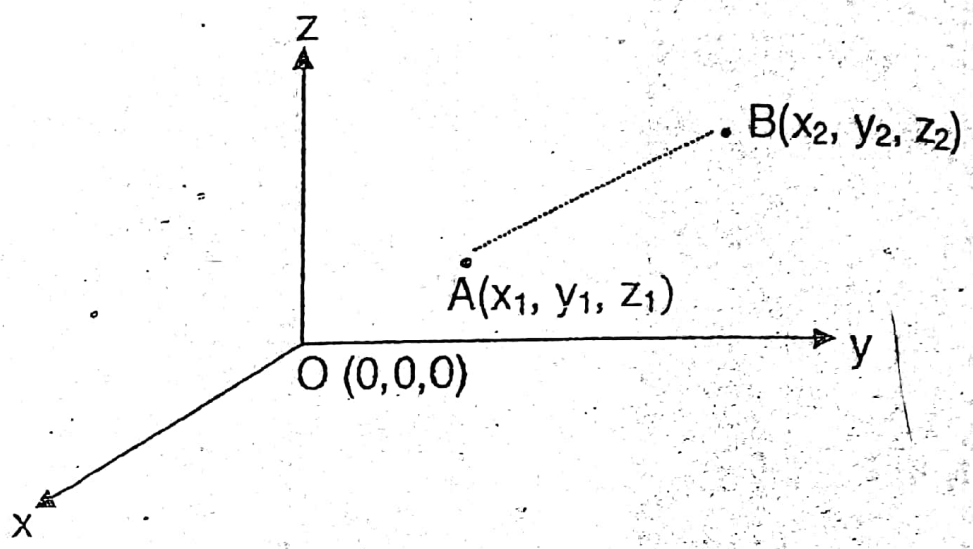

The distance between A and B is

$$AB = \sqrt{(x_2 - x_1)^2 + (y_2 - y_1)^2 + (z_2 - z_1)^2}$$

Other systems of coordinates are the **cylindrical polar coordinates** and the **spherical polar coordinates**. The cylindrical polar coordinates (ρ, ϕ, z), fig 1.4a, are defined in terms of the cartesian coordinates (x, y, z) by the equations,

$$x = \rho \cos \phi, \; y = \rho \sin \phi, \; z = z$$

The spherical polar coordinates (r, θ, ϕ), fig. 1.4b, are related to the Cartesian Coordinates (x, y, z) as follows:

Scanned by CamScanner

From fig. 1.4b,

$$OB = r\cos(90^\circ - \theta) = r\sin\theta$$

$$\therefore\ x = OB\cos\phi = r\sin\theta\cos\phi$$

$$y = OB\sin\phi = r\sin\theta\sin\phi$$

$$z = r\cos\theta$$

$$\therefore\ x = r\sin\theta\cos\phi, \quad y = r\sin\theta\sin\phi, \quad z = r\cos\theta.$$

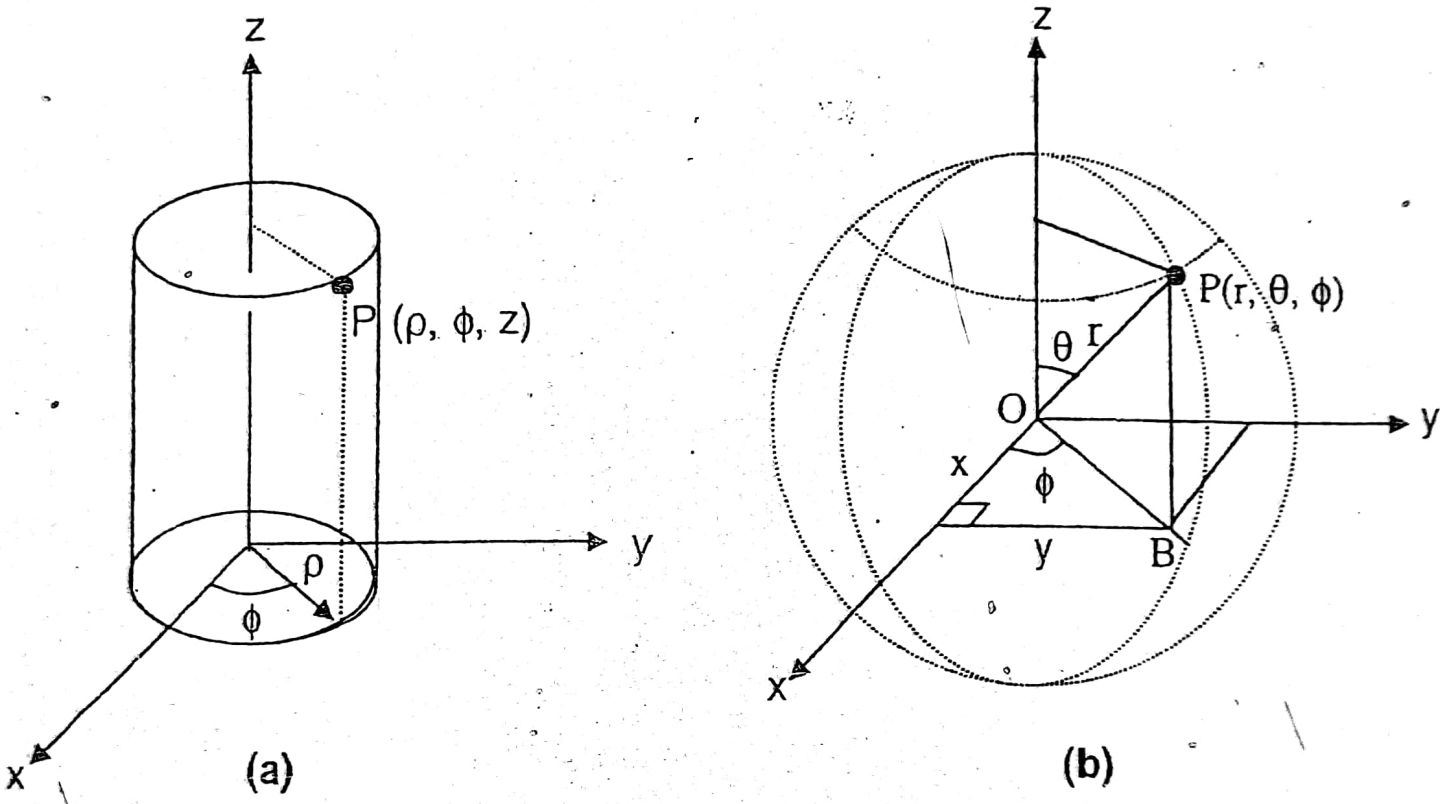

Fig.1.4

From the above discussion of coordinate systems, we have seen that a point has a unique set of coordinates relative to a given coordinate system. However, a point has a different set of coordinates relative to a second coordinate system. It is therefore essential to specify a chosen coordinate system at the outset of an investigation. This **specified coordinate system** is called a **Frame of Reference**.

Scanned by CamScanner

TIME

Our idea of time is based on our experience of such phenomena as the changing of the seasons, the pattern of the day and night and the swinging of a pendulum. These phenomena are periodic in nature and they afford us means of measuring time in terms of years, days, hours, minutes and seconds. We use clocks and watches of various designs to measure time.

EVENTS

An event is a **happening** that occurs in space at a particular instant of time. A flying bird in the sky is an example of an **event**. A flash of light from a photographer's flash bulb is another example of an event.

A person who is equipped to locate the position of an event in space and time is called an **observer**. An observer can measure the coordinates of the points of a region of space occupied by flying bird at any instant of time. This means that the observer records the three position coordinates (x, y, z) and the time the event is taking place. The observer simply writes (x, y, z, t).

Now, would a different observer with a different frame of reference and a different clock have the same recordings? Before we answer this question let us analyze the assumptions made about space and time in **Newtonian Mechanics**.

Assumptions about Space and Time

The basic assumptions about space and time in Newtonian Mechanics are:

(i) **Space** is **Isotropic**: This means there are no preferred directions in space.

(ii) **Space** and **time** are **homogeneous**: This means that there are no special points or regions of space, and there are no special instant of time.

(iii) **Time** is **absolute**: This means that the time interval between two events is an **absolute invariant**, i.e. it is independent of the observer.

(iv) **Spatial displacement** is **absolute**: This means that the spatial displacement between two events is the same for all observers.

Scanned by CamScanner

Relative Motion

In this section, we wish to study the motion of one frame of reference relative to another. Let Oxyz be the **frame of reference** of a **stationary observer** and $O'x'y'z'$ the frame of reference of a **moving observer,** moving with a constant speed u relative to the fixed or stationary frame of reference. A frame of reference moving with constant speed relative to another frame of reference is not accelerating and so it is called **non-accelerating frame of reference**. It is also called **inertia frame** of reference. Let the axis $O'x'$, $O'y'$, $O'z'$ be parallel to the axis Ox, Oy, Oz, respectively, throughout the motion. Suppose both observers have clocks, which they synchronized, when their origins O and O' coincided.

After time t the moving observer has travelled a distance of ut, fig. 1.5. Let P be any point in space. Here, we assume that the moving observer moves along the x-axis.

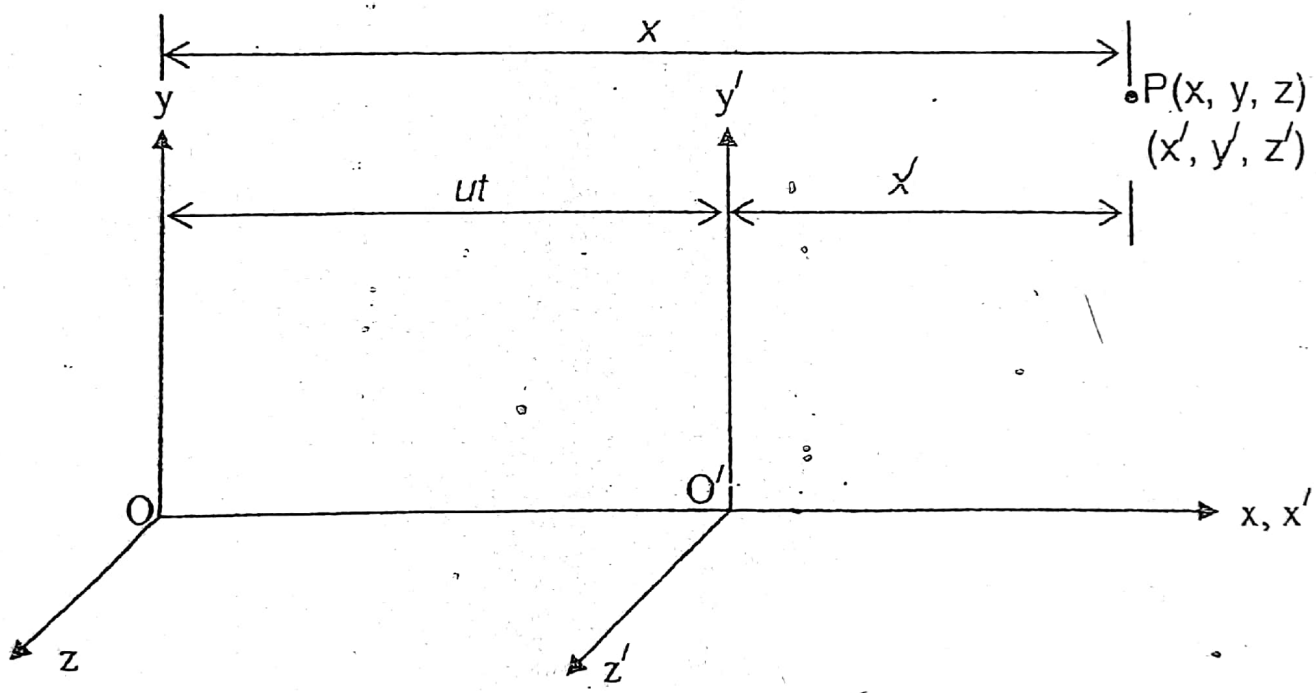

Fig. 1.5

So the stationary observer records the coordinates of P to be (x, y, z, t), while the moving observer records (x', y', z', t'), i.e. <u>primed coordinates</u> give the measurements of the moving observer.

Scanned by CamScanner

By comparing distances and using the absoluteness of displacement in fig.1.5, we relate the two coordinates (x, y, z, t) and (x′, y′, z′, t′) as follows:

$$x = x' + ut'$$
$$y = y' \qquad (1.12)$$
$$z = z'$$

Since the motion takes place only along the x-direction, the y- and z- displacements for both observers are the same i.e. $y = y'$ and $z = z'$.

The absoluteness of time and the synchronization of the clocks enable us to write

$$t' = t. \qquad (1.13)$$

These equations for the displacement, which relate the measurements of stationary observer to that of the moving observer, are called **Galilean transformation Equations** for displacement.

Now if we differentiate the expressions given by (1.12), we get the **Galilean velocity transformation**:

$$\frac{dx}{dt} = \frac{dx'}{dt} + \frac{d(ut')}{dt'}$$

$$\therefore v_x = v_x' + u$$
$$v_y = v_y' \qquad (1.14)$$
$$v_z = v_z'$$

The y- and z- velocities for both observers are the same.

Similarly, if we differentiate the Galilean velocity transformations we get the **Galilean acceleration transformations:**

Scanned by CamScanner

$$\frac{dv_x}{dt} = \frac{dv'_x}{dt'} + \frac{du}{dt'}$$

$$a_x = a'_x + 0$$

$$\therefore a_x = a'_x$$

$$a_y = a'_y \qquad (1.15)$$

$$a_z = a'_z$$

Since acceleration is a vector quantity, we express (iii) in vector notation as

$$\mathbf{a} = \mathbf{a}' \qquad (1.16)$$

We therefore conclude by saying that

*If an observer in a certain coordinate frame measures an acceleration **a** for a particle, any other observer whose coordinate frame moves at constant velocity **u** with respect to the first frame will measure the same acceleration vector for the particle.*

Acceleration (unlike velocity or displacement) is therefore an **invariant quantity**. Vectors such as acceleration that are the same in all un-accelerated coordinate frames are called **free vectors**.

Example 1.7:

A passenger in a train moving at 30 m/s passes a man standing on a station platform at $t = t' = 0$. Twenty seconds after the train passes him, the man on the platform determines that a bird flying along the tracks in the same direction as the train is 800 m away.

(i) What are the coordinates of the bird as determined by the passenger?

(ii) If 5 seconds after making the first coordinate measurement, the man on the platform determines that the bird is 850 m away, find the velocity of the bird (assumed constant) as determined by the man on the platform and by the passenger on the train.

Scanned by CamScanner

Solution

(i) The coordinates assigned to the bird by the man on the station platform (stationary observer O) is

$$(x, y, z, t) = (800\text{ m}, 0, 0, 20\text{ s})$$

The passenger (moving observer O′) measures the following coordinates:

$$x' = x - ut = 800\text{ m} - (30\text{ m/s})(20\text{ s}) = 200\text{ m}$$
$$y' = y = 0$$
$$z' = z = 0$$
$$t' = t = 20$$

Therefore the bird's coordinates as determined by the passenger are

$$(x', y', z', t') = (200\text{ m}, 0, 0, 20\text{ s})$$

(iii) The coordinates assigned to the bird at the second position by the man on the platform are

$$(x_2, y_2, z_2, t_2) = (850\text{ m}, 0, 0, 25\text{ s})$$

Hence, the velocity u_x of the bird as measured by the man on the platform is

$$u_x = \frac{x_2 - x_1}{t_2 - t_1} = \frac{850\text{m} - 800\text{m}}{25\text{s} - 20\text{s}} = 10\text{m/s}.$$

The positive sign indicates that the bird is moving in the positive x-direction. The velocity of the bird as measured by the passenger (moving observer), according to the Galilean velocity transformation, is

$$u'_x = u_x - u = 10(\text{m/s}) - 30(\text{m/s}) = -20\text{ m/s}.$$

The negative sign means the bird is moving in the negative x′-direction.

1.7 Vector Analysis

1.7.1 Introduction

- A vector quantity is a quantity having both magnitude and direction. Examples are displacement, velocity, force and acceleration. Graphically we represent a

Scanned by CamScanner

vector by an arrow OP, fig. 1.6. The arrow defines the direction of the vector. Analytically, we represent a vector by a bold letter, as **A** in fig. 1.6. The magnitude of the vector **A** is written as |**A**| or A.

Fig. 1.6

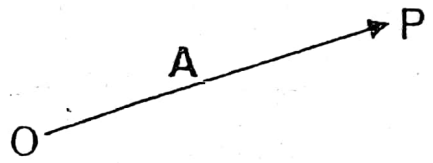

Example 1.5:

Represent graphically

(i) a force of 10N in a direction 30° north of east
(ii) a force of 15N in a direction 30° east of north.

Solution:

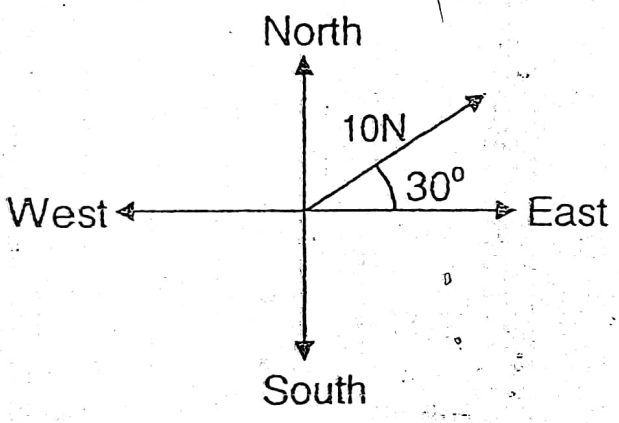

(i)

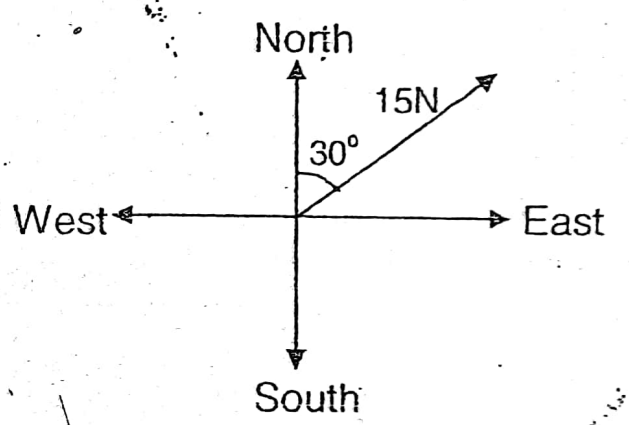

(ii)

1.7.2 Vector Algebra

Fundamental Definitions:

1. Two vectors **A** and **B** are equal if they have the same magnitude and direction, regardless of the position of their initial points.

Fig. 1.7

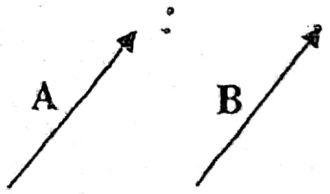

Hence, from fig. 1.7, **A** = **B**.

Scanned by CamScanner

2. A vector having direction opposite to that of vector **A** but having the same magnitude is denoted by **–A**, see fig. 1.8.

Fig. 1.8

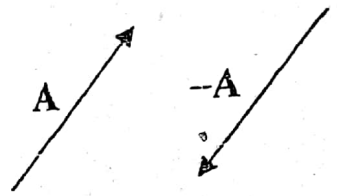

3. The sum or **resultant** of two vectors **A** and **B** is a vector **C** given by

$$\mathbf{C} = \mathbf{A} + \mathbf{B}$$

To represent **C** graphically, we use the following procedure:

(i) On a diagram drawn to scale, lay out the vector **A**

(ii) Draw **B** with its tail at the head of **A**.

(iii) Finally draw a line from the tail of **A** to the head of **B**. This line, with its arrow pointing toward **B**, gives the vector sum **C** (see fig. 1.9).

Fig. 1.9

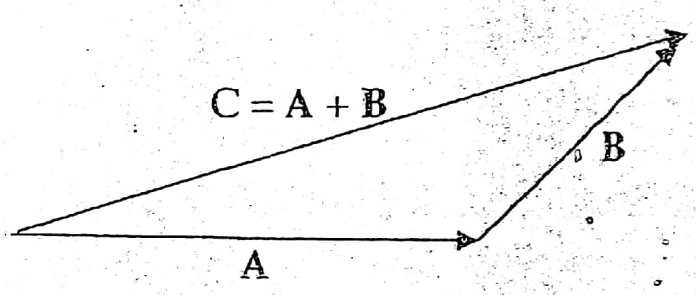

4. The difference of vectors **A** and **B**, is that vector **D** given by

$$\mathbf{D} = \mathbf{A} - \mathbf{B}$$

If **A** = **B**, then **A** – **B** is defined as the **null** or **zero vector** and is represented by **0**.

5. A unit vector is a vector whose magnitude is 1. If **A** is a vector with magnitude $|\mathbf{A}| \neq 0$, then

$$\hat{\mathbf{A}} = \frac{\mathbf{A}}{|\mathbf{A}|},$$

is a unit vector having the same direction as **A**.

Scanned by CamScanner

1.7.3 The Rectangular Unit Vectors $\hat{i}$, $\hat{j}$, $\hat{k}$

A vector **A** can be expressed by the product of its magnitude A and a unit vector $\hat{A}$ having the same direction as **A**:

$$\mathbf{A} = A\hat{\mathbf{A}}$$

Now consider the motion of a body, from point O to point P, fig. 1.10. The total displacement of this body is **OP** = **R**. The distance moved along the x –axis is x, which is the magnitude of the displacement **OB**. To get the vector **OB**, we multiply x by a unit vector in the direction of the x-axis. This unit vector in the x = direction is, by convention, taken to be $\hat{i}$. Hence, **OB** = $\hat{i}x$.

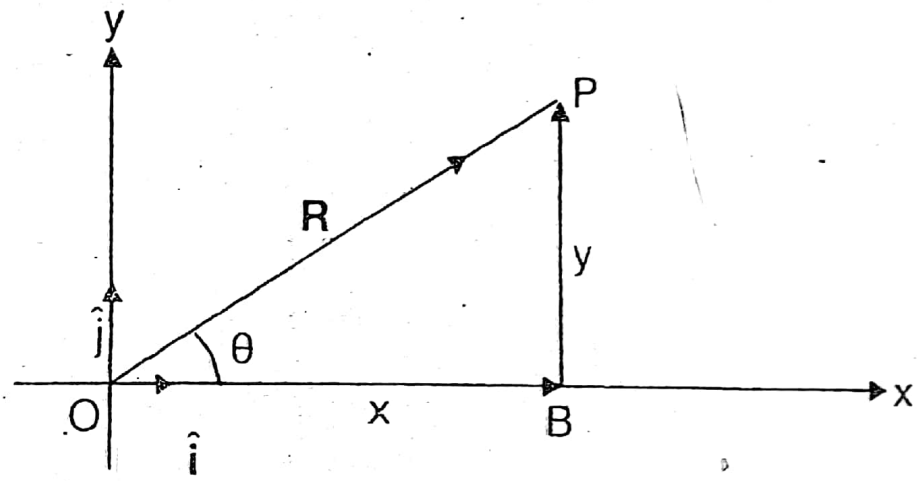

Fig. 1.10

Similarly, the distance moved along the y-axis is BP = y. If we multiply y by a unit vector in the direction of the y-axis, we get the vector **BP**. By convention, the unit vector in the y direction is taken to be $\hat{j}$.

$$\therefore \mathbf{BP} = \hat{j}y$$

The total displacement **R** is the sum of the x- and y- displacements:

$$\mathbf{R} = \mathbf{OB} + \mathbf{BP} = \hat{i}x + \hat{j}y$$

The magnitude of **R** is R. Applying Pythagoras theorem to fig. 1.10, we have

$$R = \sqrt{x^2 + y^2}$$

Scanned by CamScanner

In three dimensions, the displacement vector **R** is the sum of the x-, y- and z-displacements, fig. 1.11:

$$\mathbf{R} = \hat{i}x + jy + kz$$

where **k** is the unit vector in the direction of the z-axis.

Fig.1.11

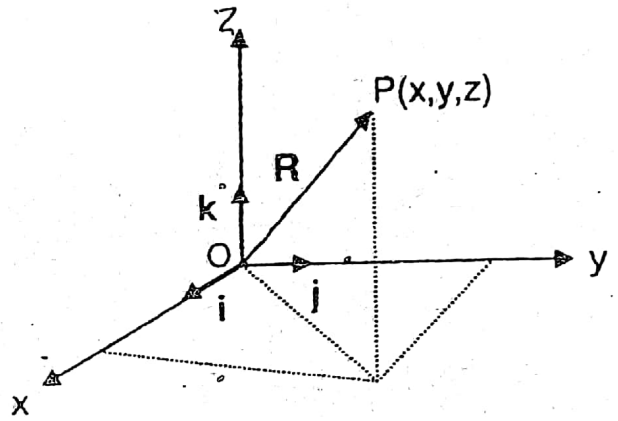

The magnitude of **R** is given by

$$R = \sqrt{x^2 + y^2 + z^2}$$

1.7.4 Resolution of Forces

We can express x and y in fig. 1.10 in terms of R and θ. From the right-angled triangle OPB,

$$\frac{x}{R} = \cos\theta$$

$$\therefore x = R\cos\theta \qquad (1.17)$$

Similarly,

$$\frac{y}{R} = \sin\theta$$

$$\therefore y = R\sin\theta \qquad (1.18)$$

where $x = R\cos\theta$ is the distance moved along the x-axis, while $y = R\sin\theta$ is the distance moved along the y-axis. In other words, $R\cos\theta$ is the component

Scanned by CamScanner

of R in the x-direction or ***horizontal component*** of R, while R sinθ is the component of R in the y-direction or ***vertical component*** of R.

Thus, we have broken a single force **R** acting at an angle θ with the x-axis into two perpendicular components: x = R cosθ and y = R sin θ, fig. 1.12.

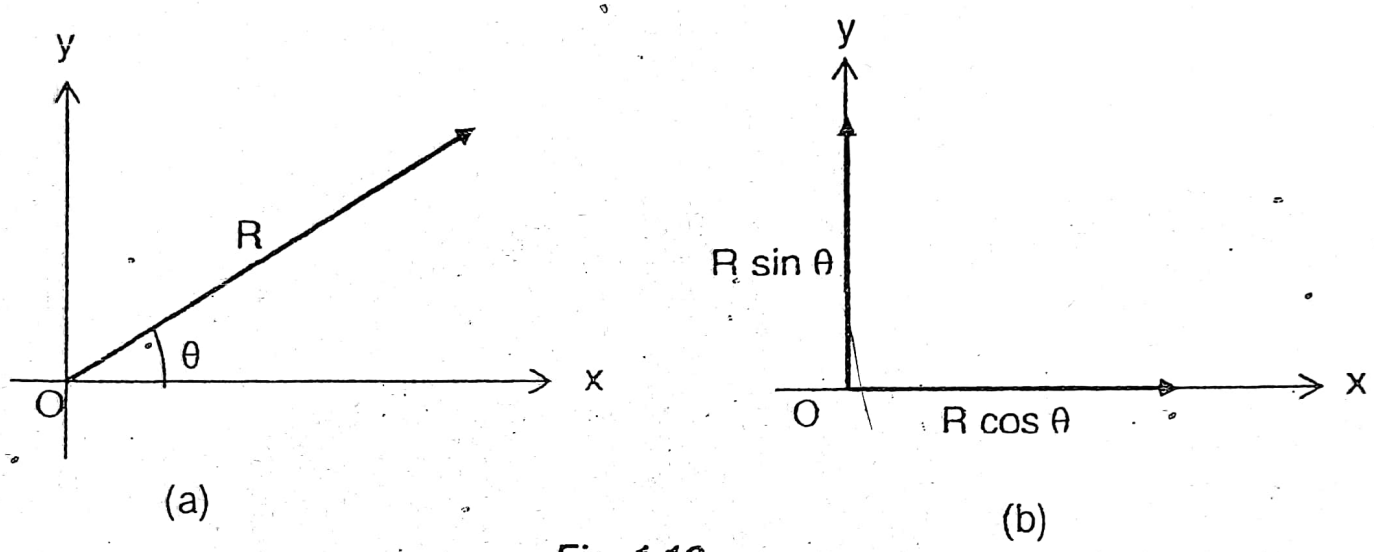

Fig. 1.12

The process of breaking down a single vector into horizontal and vertical components is called ***Resolution of Vectors.*** If the vector is a force, we call the process ***Resolution of Forces.*** Thus a single force **F** acting at an angle of θ with the x-axis is equivalent to the sum of its x- and y-components:

$$\mathbf{F} = \hat{i}\,F\cos\theta + \hat{j}\,F\sin\theta$$

Example 1.6: Find the magnitudes of the following vectors:

(a) $\mathbf{R} = 3\hat{i} + 2\hat{j} - 4\hat{k}$ (b) $\mathbf{A} = 3\hat{i} + 2\hat{k}$

Solution:

(a) $|\mathbf{R}| = R = \sqrt{x^2 + y^2 + z^2} = \sqrt{3^2 + 2^2 + (-4)^2} = 5.39$

(b) $|\mathbf{A}| = \sqrt{x^2 + y^2 + z^2} = \sqrt{3^2 + 0^2 + 2^2} = 3.6$

Scanned by CamScanner

Example 1.7

Given $r_1 = 3\hat{i} - 2\hat{j} + \hat{k}$, $r_2 = 2\hat{i} - 4\hat{j} - 3\hat{k}$ and $r_3 = -\hat{i} + 2\hat{j} + 2\hat{k}$, find the magnitude of

(a) $R = r_1 + r_2 + r_3$ (b) $A = 2r_1 - 3r_2 - 5r_3$

Solution

(a) $R = r_1 + r_2 + r_3 = (3i - 2j + k) + (2i - 4j - 3k) + (-i + 2j + 2k) = 4i - 4j$

$$\therefore |R| = R = \sqrt{x^2 + y^2 + z^2} = \sqrt{4^2 + (-4)^2} = 5.66$$

(b) $A = 2r_1 - 3r_2 - 5r_3 = 2(3i - 2j + k) - 3(2i - 4j - 3k) - 5(-i + 2j + 2k) = 5i - 2j$

$$\therefore |A| = A = \sqrt{x^2 + y^2 + z^2} = \sqrt{5^2 + (-2)^2 + 1^2} = 5.48$$

1.7.5 The Resultant of two or More Forces

If two forces F_1 and F_2 act at a point P on the same line and same direc fig. 1.13a, their resultant R can be obtained by adding them algebraically.

For example, if $F_1 = 10$ N and $F_2 = 20$ N, then the magnitude of the resu |R| is

$$|R| = |F_1| + |F_2| = 10\text{ N} + 20\text{ N} = 30\text{ N}.$$

The direction is toward the right.

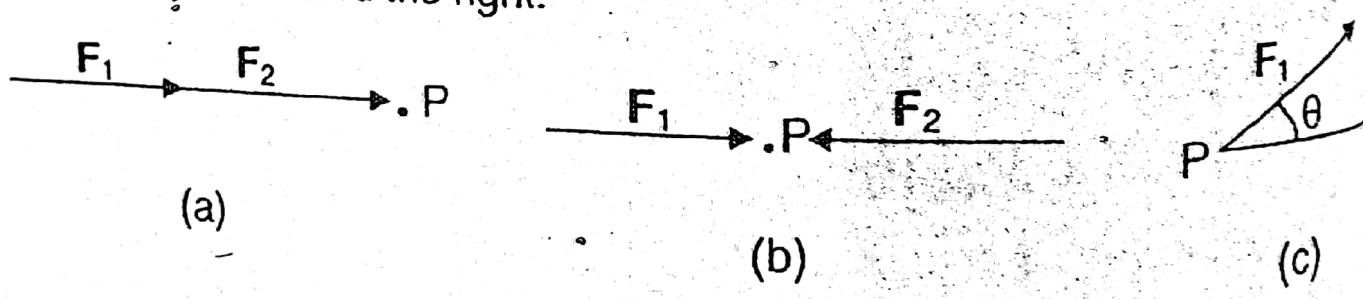

Fig. 1.13

If the forces act along the same line but in the opposite direction, fig. 1. the magnitude of the resultant force can be obtained by subtraction:

$$|R| = |F_1| - |F_2|.$$

Scanned by CamScanner

ubstituting $F_1 = 10$ N and $F_2 = 20$ N, we have

$$|\mathbf{R}| = |\mathbf{F}_1| - |\mathbf{F}_2| = 10 - 20 = -10\text{N}.$$

he negative sign indicates that the resultant force **R** is toward the left.

the lines of action of the two forces make an angle of θ with each other, the agnitude of the resultant force can be obtained by applying the ***arallelogram law*** of forces. *The parallelogram law* of forces states that:

f two forces acting at a point are represented both in magnitude and irection by the adjacent sides of a parallelogram, then their resultant an be represented both in magnitude and direction by the diagonal assing through their point of intersection.

hus, to get the resultant force **R** in fig. 1.13c, we first complete the arallelogram and obtain the parallelogram ABCD as shown in fig. 1.14:

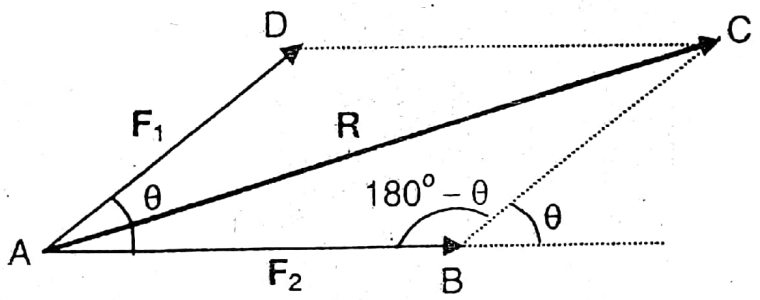

Fig.1.14

hen applying the cosine rule to the triangle ABC in fig. 1.14, we get the esultant R:

$$R^2 = F_1^2 + F_2^2 - 2F_1F_2\cos(180^\circ - \theta)$$

Example 1.8

wo forces, $F_1 = 20$ N, and $F_2 = 30$ N act at an angle of 30° with each other, s shown below. Find their resultant.

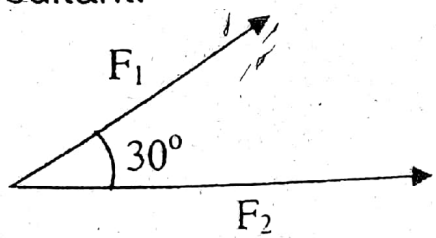

Scanned by CamScanner

Solution:

Using a suitable scale, we represent each force by length:

Scale: Let 10 N ≡ 1 cm. Then 20 N ≡ 2 cm, and 30 N ≡ 3 cm.

We now draw a line 3 cm in length to represent the force 30 N, and another line 2 cm making an angle of 30° with the 3-cm line to represent the 20-N force, fig. 1.15a.

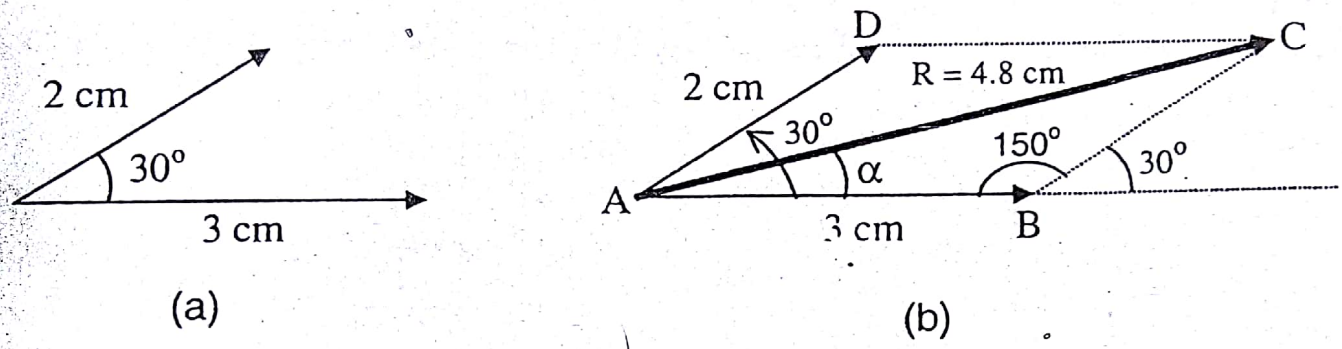

Fig. 1.15

The parallelogram is then completed by construction and the length of the diagonal R = AC is measured, fig.1.15b. The length AC = R = 4.8 cm.

Alternatively, we can calculate the length of the diagonal AC by applying cosine rule to the triangle ABC in fig. 1.15b:

$$R^2 = 3^2 + 2^2 - 2(3)(2)\cos(180° - 30°)$$

$$\therefore R = 4.8 \text{ cm.}$$

Since 10 N ≡ 1 cm, 4.8 cm ≡ 48 N.

Therefore, the resultant of 20 N and 30 N acting at an angle of 30° is 48 N.

The direction of the resultant R is given by the angle α in fig. 1.15b. From triangle ABC,

$$2^2 = 4.8^2 + 3^2 - 2(4.8)(3)\cos\alpha$$

$$\therefore \alpha = 13.2°$$

Scanned by CamScanner

The Resultant of Forces by the Method of Resolution

n three or more forces act at a point, their resultant can be found by first ving each force into x- and y-components. Thereafter, the sum of x- onents ΣF_x and the sum of y-components ΣF_y of the forces are uted. Using Pythagoras's theorem in conjunction with the Parallelogram he resultant vector R can be calculated.

nple 1.9:

e forces F_1, F_2 and F_3 act as shown in fig. 1.16. Calculate the magnitude direction of the resultant force.

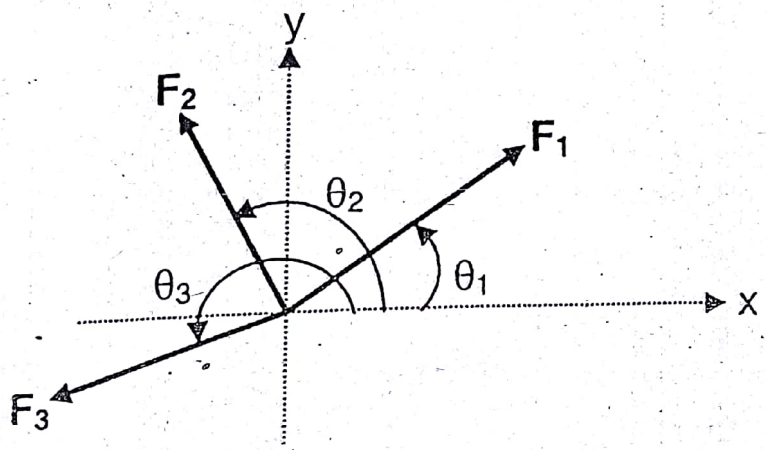

Fig.1.16

tion:

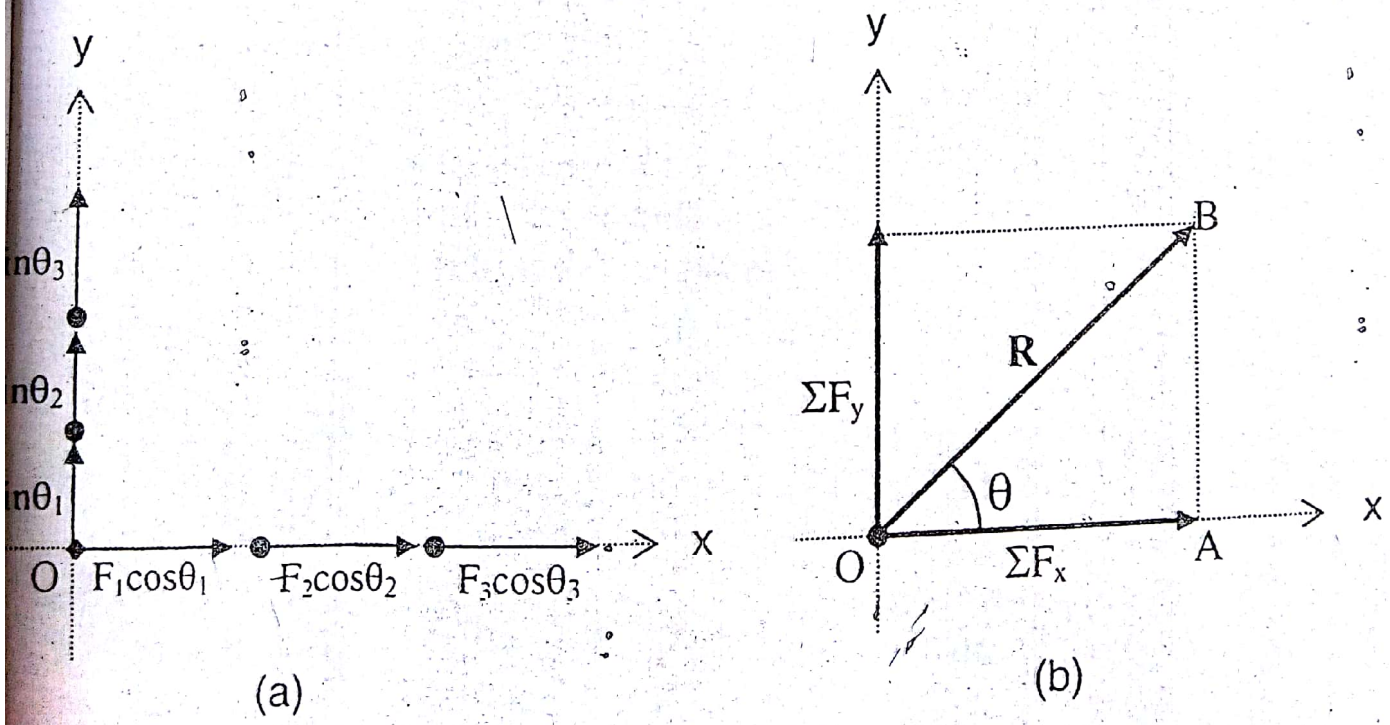

Fig. 1.17

Scanned by CamScanner

The direction of a vector is specified by the angle it makes with the x-axis, measured in the anti-clockwise direction. So, the direction of $\mathbf{F}_1$ is θ_1, that of $\mathbf{F}_2$ is θ_2 and that of $\mathbf{F}_3$ is θ_3. We can resolve each force into x– and y–components and then replace fig.1.16 with fig.1.17:

Since the x-components of the forces are in the same direction, we can add them up algebraically. Therefore, the sum of x-components of these forces is

$$\Sigma F_x = F_1\cos\theta_1 + F_2\cos\theta_2 + F_3\cos\theta_3.$$

Similarly, for y-components we have

$$\Sigma F_y = F_1\sin\theta_1 + F_2\sin\theta_2 + F_3\sin\theta_3.$$

Fig. 1.17b is equivalent to fig. 1.17a. Thus, we have reduced the system of forces shown in fig. 1.16 to two perpendicular forces ΣF_x and ΣF_y acting at point O, fig. 1.17b. According to the parallelogram law of forces, their resultant **R** is equal to the length of the diagonal OB passing through their point of intersection.

Applying Pythagoras theorem to the triangle OAB in fig. 1.17b, we have

$$R = \sqrt{\left(\sum F_x\right)^2 + \left(\sum F_y\right)^2}.$$

The angle θ which the resultant force **R** makes with x-axis gives the direction of the resultant force and is given by

$$\tan = \frac{\sum F_y}{\sum F_x}$$

Scanned by CamScanner

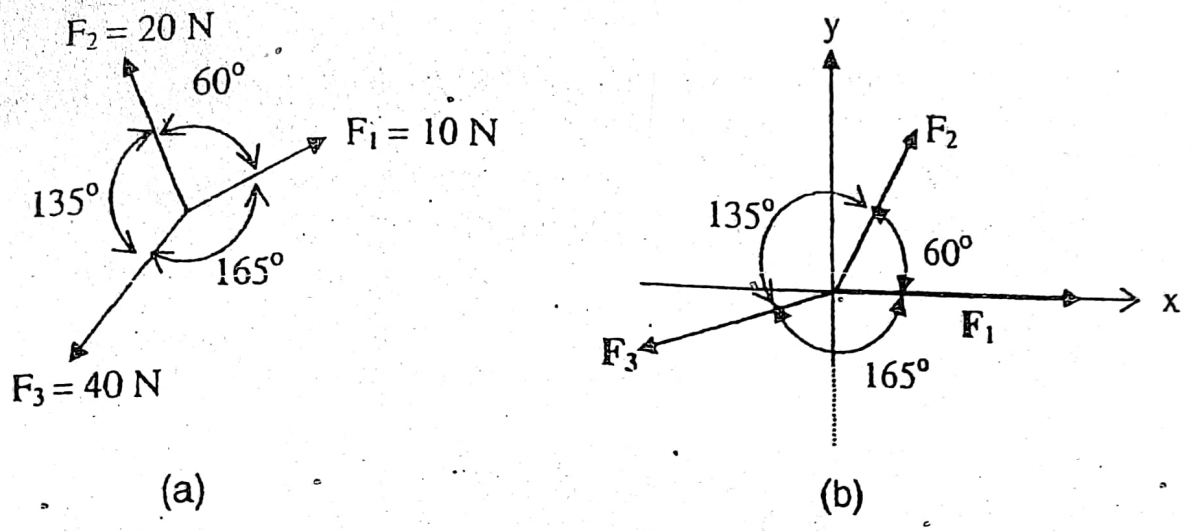

Fig. 1.18

Solution:

First, we place one of the forces along the x-axis, without altering the angle between them, fig.1.18b. Then,

$F_1 = 10$ N, direction $\theta_1 = 0°$,
$F_2 = 20$ N, direction $\theta_2 = 60°$,
$F_3 = 40$ N, direction $\theta_3 = 195°$.

$$\therefore \Sigma F_x = F_1\cos\theta_1 + F_2\cos\theta_2 + F_3\cos\theta_3.$$
$$= 10\cos 0° + 20\cos 60° + 40\cos 195°$$
$$= 10 + 10 - 38.64 = -18.64$$

$$\Sigma F_y = F_1\sin\theta_1 + F_2\sin\theta_2 + F_3\sin\theta_3$$
$$= 10\sin 0° + 20\sin 60° + 40\sin 195°$$
$$= 0 + 17.3 - 10.35 = 6.95$$

The resultant force R is therefore

$$R = \sqrt{\left(\sum F_x\right)^2 + \left(\sum F_y\right)^2}$$

$$= \sqrt{(-18.64)^2 + (6.95)^2} = 19.89 \text{ N}$$

Scanned by CamScanner

The direction of the resultant force is obtained from

$$\tan\theta = \frac{\sum F_y}{\sum F_x} = \frac{6.95}{-18.64} = -0.3728 \qquad \Rightarrow \theta = -20.4^\circ$$

The negative sign means that the angle is in the second quadrant. Hence,

$$\theta = 180^\circ - 20.4^\circ = 159.6^\circ$$

Hence, the resultant force R makes an angle of 159.6° with the x-axis.

1.8 Vector Multiplications

1.8.1 The Scalar Product (or Dot Product) of Two Vectors

There are many instances in which a scalar physical quantity is generated by a type of multiplication involving two vectors. Suppose a block of mass m is pulled through a distance s by applying a force F in the direction shown, fig. 1.19.

Fig. 1.19

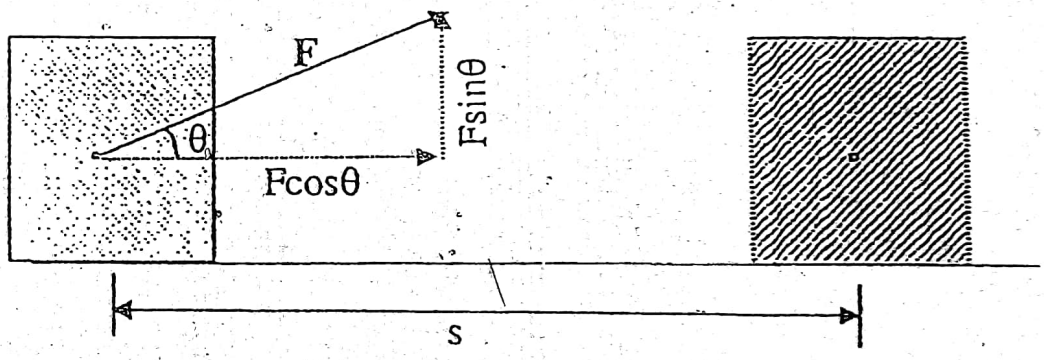

Component of the force F in the direction of motion is $F_{\parallel} = F\cos\theta$, while the component perpendicular to the direction of motion is $F_{\perp} = F\sin\theta$. By definition,

Work done = force x distance moved in the direction of the force
= Product of F and the displacement s
$= |F_{\parallel}||s| = (F\cos\theta)s = sF\cos\theta$

Work is a scalar quantity, obtained by multiplying two vectors, F and s. This kind of multiplication that generates a scalar from two vectors is called the

Scanned by CamScanner

scalar product or **dot product**. The dot or scalar product of two vectors **A** and denoted by **A·B** (read **A** dot **B**) is a scalar defined by the equation

$$\mathbf{A}\cdot\mathbf{B} = |\mathbf{A}||\mathbf{B}|\cos\theta \qquad (1.19)$$

where θ measures the smallest angle between **A** and **B** when their initial points coincide, while $|\mathbf{A}|$ and $|\mathbf{B}|$ are the magnitudes of **A** and **B** respectively.

The **Vector Projection** of **B** onto **A** is a vector that we get by projecting **B** onto the line through **A**. It is denoted by $\text{Proj}_A\mathbf{B}$, fig. 1.20b.

Fig.1.20

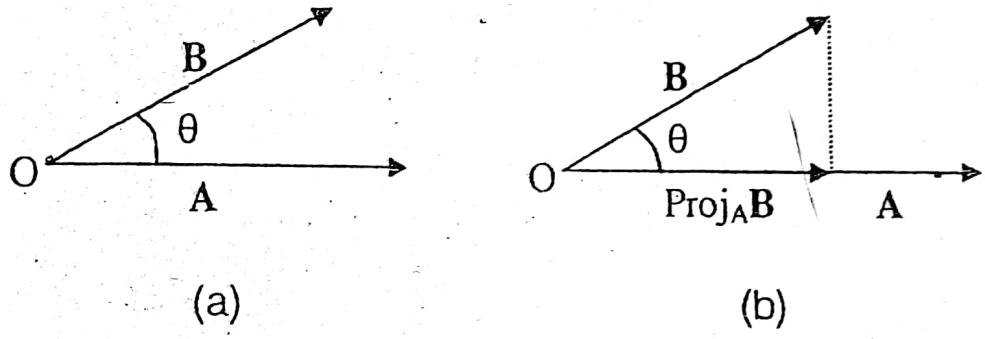

The component of **B** in the direction of **A** is equal to a number that is plus or minus of the vector projection of **B** onto **A**:

B-component in A-direction = B cosθ

Since $\hat{A} = \frac{\mathbf{A}}{|\mathbf{A}|}$ is a unit vector in the direction of **A**, the component of **B** in the direction of **A** is therefore

$$\text{Proj}_A\mathbf{B} = B\cos\theta = \hat{A}\cdot\mathbf{B} = \frac{\mathbf{A}}{|\mathbf{A}|}\cdot\mathbf{B} = \frac{\mathbf{A}\cdot\mathbf{B}}{|\mathbf{A}|}$$

If $\mathbf{A} = A_x\mathbf{i} + A_y\mathbf{j} + A_z\mathbf{k}$ and $\mathbf{B} = B_x\mathbf{i} + B_y\mathbf{j} + B_z\mathbf{k}$, then

$$\begin{aligned}\mathbf{A}\cdot\mathbf{B} &= (A_x\mathbf{i} + A_y\mathbf{j} + A_z\mathbf{k}).(B_x\mathbf{i} + B_y\mathbf{j} + B_z\mathbf{k})\\ &= A_xB_x(\mathbf{i}\cdot\mathbf{i}) + A_xB_y(\mathbf{i}\cdot\mathbf{j}) + A_xB_z(\mathbf{i}\cdot\mathbf{k})\\ &\quad + A_yB_x(\mathbf{j}\cdot\mathbf{i}) + A_yB_y(\mathbf{j}\cdot\mathbf{j}) + A_yB_z(\mathbf{i}\cdot\mathbf{k})\\ &\quad + A_zB_x(\mathbf{k}\cdot\mathbf{i}) + A_zB_y(\mathbf{k}\cdot\mathbf{j}) + A_zB_z(\mathbf{k}\cdot\mathbf{k})\end{aligned}$$

Scanned by CamScanner

Since

$$\mathbf{i}\cdot\mathbf{i} = \mathbf{j}\cdot\mathbf{j} = \mathbf{k}\cdot\mathbf{k} = |\mathbf{i}||\mathbf{i}|\cos 0^\circ = (1)(1)(1) = 1,$$
$$\mathbf{i}\cdot\mathbf{j} = \mathbf{j}\cdot\mathbf{k} = \mathbf{k}\cdot\mathbf{i} = |\mathbf{i}||\mathbf{j}|\cos 90^\circ = (1)(1)(0) = 0,$$

we have

$$\mathbf{A}\cdot\mathbf{B} = A_xB_x + A_yB_y + A_zB_z \qquad (1.20)$$

Equating (1.19) and (1.20), we have

$$\mathbf{A}\cdot\mathbf{B} = |\mathbf{A}|\,|\mathbf{B}|\cos\theta = A_xB_x + A_yB_y + A_zB_z$$

$$\therefore \cos\theta = \frac{\mathbf{A}\cdot\mathbf{B}}{|\mathbf{A}||\mathbf{B}|} = \frac{A_xB_x + A_yB_y + A_zB_z}{|\mathbf{A}||\mathbf{B}|} \qquad (1.21)$$

Equation (1.21) can be used to find the angle between two given vectors.

Example 1.11

(a) Find the angle between $\mathbf{A} = \mathbf{i} - 2\mathbf{j} - 2\mathbf{k}$ and $\mathbf{B} = 6\mathbf{i} + 3\mathbf{j} + 2\mathbf{k}$.
(b) Find the component of $\mathbf{B}$ in the direction of $\mathbf{A}$.

Solution

$\mathbf{A} = \mathbf{i} - 2\mathbf{j} - 2\mathbf{k}$, $\quad \therefore |\mathbf{A}| = \sqrt{1^2 + (-2)^2 + (-2)^2} = 3$

$\mathbf{B} = 6\mathbf{i} + 3\mathbf{j} + 2\mathbf{k}$, $\quad \therefore |\mathbf{B}| = \sqrt{6^2 + 3^2 + 4^2} = 7$

Now, $\mathbf{A}\cdot\mathbf{B} = A_xB_x + A_yB_y + A_zB_z = (1)(6) + (-2)(3) + (-2)(+2) = -4$

$$\cos\theta = \frac{\mathbf{A}\cdot\mathbf{B}}{|\mathbf{A}||\mathbf{B}|} = \frac{-4}{(3)(7)} = -\frac{4}{21}$$

$$\therefore \theta = \cos^{-1}\left(\frac{-4}{21}\right) \approx 101^\circ$$

$\therefore$ component of $\mathbf{B}$ in the direction of $\mathbf{A}$ $= \text{Proj}_{\mathbf{A}}\mathbf{B} = \dfrac{\mathbf{A}.\mathbf{B}}{|\mathbf{A}|} = \dfrac{-4}{3} = -1.33$

Scanned by CamScanner

Example 1.12:

Prove the cosine rule for plane angle.

Solution:

From fig. 1.21,

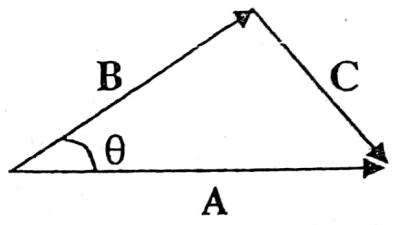

Fig. 1.21

$$\mathbf{B} + \mathbf{C} = \mathbf{A}$$

$$\therefore \mathbf{C} = \mathbf{A} - \mathbf{B}$$

$$\therefore \mathbf{C}\cdot\mathbf{C} = (\mathbf{A} - \mathbf{B}) \cdot (\mathbf{A} - \mathbf{B})$$

$$= \mathbf{A}.\mathbf{A} - \mathbf{A}\cdot\mathbf{B} - \mathbf{A}\cdot\mathbf{B} + \mathbf{B}\cdot\mathbf{B}$$

$$= A^2 + B^2 - 2\mathbf{A}\cdot\mathbf{B}$$

$$\therefore C^2 = A^2 + B^2 - 2AB\cos\theta,$$

where $\mathbf{A}\cdot\mathbf{B} = |\mathbf{A}|\,|\mathbf{B}| \cos\theta = AB\cos\theta$

1.8.2 The Vector Product of two Vectors

In fig. 1.20, if we multiply the displacement **s** by the perpendicular component $F_\perp = F\sin\theta$, we get the moment of the force, also called the torque Γ ::

$$|\Gamma| = (F\sin\theta)s = sF\sin\theta$$

But we know that the moment of a force or torque is vector quantity. So, in this multiplication, we obtained a vector quantity Γ by multiplying two vectors $F_\perp$, and **s**. This type of multiplication is called vector product or cross product. It is denoted by a cross x:

$$\Gamma = \mathbf{F}_\perp \times \mathbf{s}$$

Generally, if **A** and **B** are two vectors, the cross product of **A** and **B** is a vector **C** defined as

$$\mathbf{C} = \mathbf{A} \times \mathbf{B} \qquad \text{(read } \mathbf{A} \text{ cross } \mathbf{B}\text{)}$$

Scanned by CamScanner

The magnitude of **A** x **B** is defined as the product of the magnitudes of **A** and **B** and the sine of the angle between them:

$$|C| = |\mathbf{A} \times \mathbf{B}| = AB \sin\theta$$

The direction of the vector product **C** can be visualized with the right-hand rule, fig. 1.22. If you curl the fingers of your right hand so that they follow a rotation from vector A to vector B, then the thumb will point in the direction of the vector product.

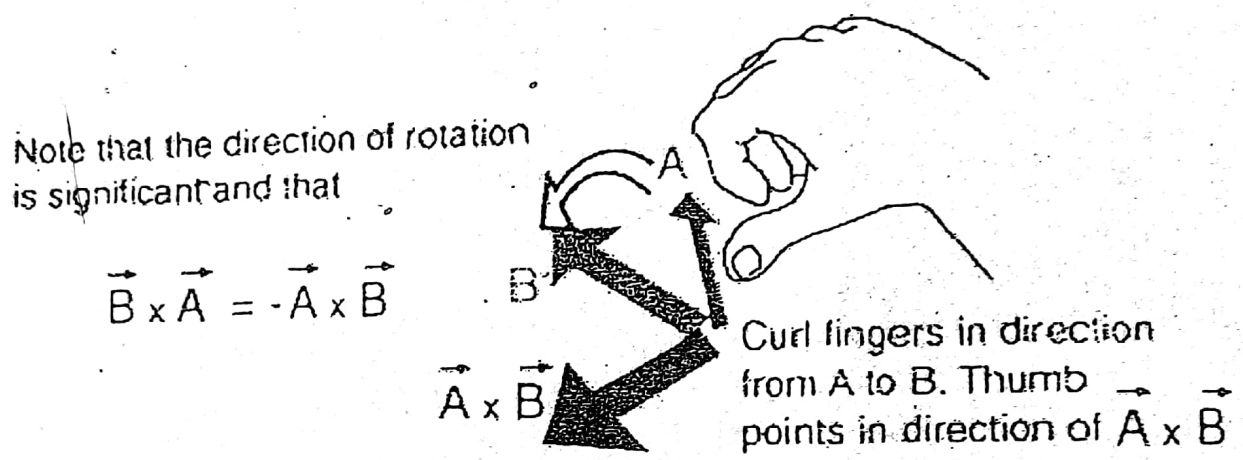

Fig. 1.22

The vector product of A and B is always perpendicular to both A and B. Another way of stating that is to say that the vector product is perpendicular to the plane formed by vectors A and B,

Since the vector product **C** = **A** x **B** is perpendicular to both **A** and **B**,

$$\mathbf{C}\cdot\mathbf{A} = CA\cos 90^\circ = \mathbf{C}\cdot\mathbf{B} = CB\cos 90^\circ = 0.$$

If $\mathbf{A} = A_x\mathbf{i} + A_y\mathbf{j} + A_z\mathbf{k}$ and $\mathbf{B} = B_x\mathbf{i} + B_y\mathbf{j} + B_z\mathbf{k}$, then

$$\begin{aligned}\mathbf{A} \times \mathbf{B} &= (A_x\mathbf{i} + A_y\mathbf{j} + A_z\mathbf{k}) \times (B_x\mathbf{i} + B_y\mathbf{j} + B_z\mathbf{k}) \\ &= A_xB_x(\mathbf{i} \times \mathbf{i}) + A_xB_y(\mathbf{i} \times \mathbf{j}) + A_xB_z(\mathbf{i} \times \mathbf{k}) \\ &+ A_yB_x(\mathbf{j} \times \mathbf{i}) + A_yB_y(\mathbf{j} \times \mathbf{j}) + A_yB_z(\mathbf{j} \times \mathbf{k}) \\ &+ A_zB_x(\mathbf{k} \times \mathbf{i}) + A_zB_Y(\mathbf{k} \times \mathbf{j}) + A_zB_Z(\mathbf{k} \times \mathbf{k})\end{aligned} \tag{1.22}$$

Scanned by CamScanner

Using $|\mathbf{A} \times \mathbf{B}| = |\mathbf{A}||\mathbf{B}|\sin\theta$, we have

$$|\mathbf{i} \times \mathbf{i}| = |\mathbf{j} \times \mathbf{j}| = |\mathbf{k} \times \mathbf{k}| = |\mathbf{i}||\mathbf{i}| \sin 0^\circ = (1)(1)(0) = 0 \qquad (1.23)$$

where the angle between **i** and **i**, **j** and **j**, and **k** and **k** is zero.

Also,

$$|\mathbf{i} \times \mathbf{j}| = |\mathbf{j} \times \mathbf{k}| = |\mathbf{k} \times \mathbf{i}| = |\mathbf{i}||\mathbf{j}| \sin 90^\circ = (1)(1)(1) = 1 \qquad (1.24)$$

In this case, the angle between **i** and **j**, **j** and **k**, and **i** and **k** is 90°.

The direction of **i** x **j** is perpendicular to the plane formed by **i** and **j**, *i.e.*, it is perpendicular to the x- and y- plane. Hence, **i** x **j** lies along the z-axis. Since its magnitude is 1, this vector must be **k**.

Hence,

$$\mathbf{i} \times \mathbf{j} = \mathbf{k} \qquad \text{and} \qquad \mathbf{j} \times \mathbf{i} = -\mathbf{k} \qquad (1.25)$$

Similarly,

$$\mathbf{j} \times \mathbf{k} = \mathbf{i}, \quad \mathbf{k} \times \mathbf{i} = -\mathbf{j}, \quad \mathbf{k} \times \mathbf{j} = -\mathbf{i}, \quad \mathbf{i} \times \mathbf{k} = -\mathbf{j} \qquad (1.26)$$

Substituting equations (1.23), (1.24), (1.25) and (1.26) into equation (1.22), we have

$$\mathbf{A} \times \mathbf{B} = 0 + A_x B_y \mathbf{k} - A_x B_z \mathbf{j} - A_y B_x \mathbf{k} + 0 + A_y B_z \mathbf{i} + A_z B_x \mathbf{j} - A_z B_y \mathbf{i} + 0$$

$$\therefore \mathbf{A} \times \mathbf{B} = (A_y B_z - A_z B_y)\mathbf{i} + (A_z B_x - A_x B_z)\mathbf{j} + (A_x B_y - A_y B_x)\mathbf{k} \qquad (1.27)$$

But the right hand side of (1.27) is just the determinant of the matrix **C**:

$$\det \mathbf{C} = \begin{vmatrix} \mathbf{i} & \mathbf{j} & \mathbf{k} \\ A_x & A_y & A_z \\ B_x & B_y & B_z \end{vmatrix} = (A_y B_z - A_z B_y)\,\mathbf{i} + (A_z B_x - A_x B_z)\mathbf{j} + (A_x B_y - A_y B_x)\,\mathbf{k}$$

$$\therefore \mathbf{C} = \mathbf{A} \times \mathbf{B} = \begin{vmatrix} \mathbf{i} & \mathbf{j} & \mathbf{k} \\ A_x & A_y & A_z \\ B_x & B_y & B_z \end{vmatrix}$$

Scanned by CamScanner

Example 1.13

Given that $\mathbf{A} = 2\mathbf{i} - 3\mathbf{j} - \mathbf{k}$ and $\mathbf{B} = \mathbf{i} + 4\mathbf{j} - 2\mathbf{k}$,

(i) find $\mathbf{C} = \mathbf{A} \times \mathbf{B}$.
(ii) Find $\mathbf{D} = \mathbf{B} \times \mathbf{A}$.
(ii) What is the magnitude of **C**?
(iv) Is $\mathbf{C} = \mathbf{D}$?

Solution:

(i) $$\mathbf{C} = \mathbf{A} \times \mathbf{B} = \begin{vmatrix} \mathbf{i} & \mathbf{j} & \mathbf{k} \\ A_x & A_y & A_z \\ B_x & B_y & B_z \end{vmatrix}$$

$$= (A_yB_z - A_zB_y)\mathbf{i} + (A_zB_x - A_xB_z)\mathbf{j} + (A_xB_y - A_yB_x)\mathbf{k}$$

$$= [(-3)(-2) - 4(-1)]\mathbf{i} + [(-1)(1) - (2)(-2)]\mathbf{j} + [(2)(4) - (1)(-3)]\mathbf{k}$$

$$= 10\mathbf{i} + 3\mathbf{j} + 11\mathbf{k}$$

(ii) The magnitude of **C** is $|\mathbf{C}| = \sqrt{10^2 + 3^2 + 11^2} = 15.2$

(iii) $$\mathbf{D} = \mathbf{B} \times \mathbf{A} = \begin{vmatrix} \mathbf{i} & \mathbf{j} & \mathbf{k} \\ B_x & B_y & B_z \\ A_x & A_y & A_z \end{vmatrix} = \begin{vmatrix} \mathbf{i} & \mathbf{j} & \mathbf{k} \\ 1 & 4 & -2 \\ 2 & -3 & -1 \end{vmatrix}$$

$$= \mathbf{i}[(4)(-1) - (-3)(-2)] + \mathbf{j}[(-2)(2) - (1)(-1)] + \mathbf{k}[(1)(-3) - (2)(4)]$$

$$= -10\,\mathbf{i} - 3\mathbf{j} - 11\mathbf{k} = -1(10\,\mathbf{i} + 3\mathbf{j} + 11\mathbf{k}) = -\mathbf{D}$$

(iv) **C** is not equal to **D** i.e. $\mathbf{C} \neq \mathbf{D}$. However, $\mathbf{C} = -\mathbf{D}$.

Problems Set 1

1. The density of water is 1.00 g/cm^3. What is this value in kg/m^3?
2. The Concorde is the fastest airplane used for commercial service and can cruise at 1450 mi/h (about two times the speed of sound or in other words Mach 2).

   (a) What is the cruise speed of the Concorde in mi/s?
   (b) What is it in m/s?

Scanned by CamScanner

3. Find the equivalent of 8.0 yd^3 in cubic meters.
4. The speed limit on a highway in Abuja is 135,000 furlongs per fortnight. How many miles per hour is this? (*One furlong is* $\frac{1}{8}$ *mile, and a fortnight is 14 days. A furlong originally referred to the length of plowed furrow.*)
5. Use dimensional analysis to determine which of the following equations is certainly wrong:

   (i) $\lambda = vt$ (ii) $F = \frac{m}{a}$ (iii) $F = \frac{mv}{t}$ (iv) $v = (2gh)^{1/2}$ (v) $h = \frac{v^2}{2g}$
6. If s is distance and t is time, what must be the dimensions of C_1, C_2, C_3 and C_4 in each of the following equations?

   (i) $s = C_1 t$ (ii) $s = \frac{1}{2}C_2 t^2$ (iii) $s = C_3 \sin C_4 t$

   (Hint: The argument of any trigonometrical function must be dimensionless)
7. The frequency *f* of vibration of a mass *m* at the end of a spring that has a stiffness constant *k* is related to *m* and *k* by a relation of the form $f = cm^a k^b$, where c is a dimensionless constant. Use dimensional analysis to find the constants *a* and *b*.
8. Find the magnitude and direction of the vector represented by each of the following pairs of components:

   (a) $A_x = 2.80$ cm, $A_y = -4.10$ cm (b) $A_x = -5.40$ m, $A_y = -9.45$ m
9. (i) Compute the x- and y- components of F_1, F_2 and F_3 shown in fig. 1.23, where $F_1 = 12$ N, $F_2 = 6$ N and $F_3 = 15$ N.

   (ii) What is the resultant of these three forces?

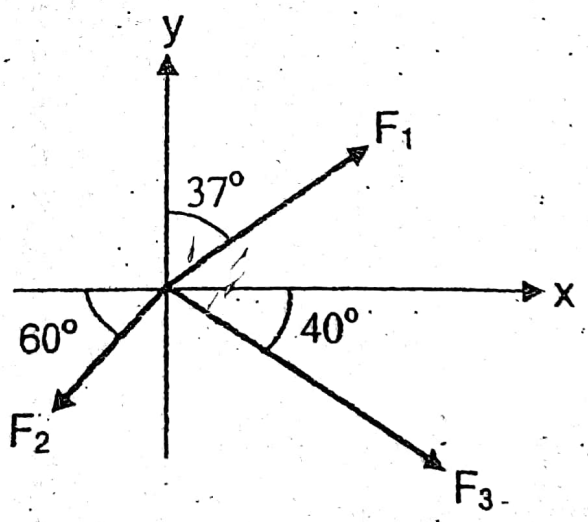

Fig. 1.23

Scanned by CamScanner

10. If $\mathbf{A} = -2i + 7j$ and $\mathbf{B} = 3i - j$,

(i) what is the dot product of **A** and **B**?

(ii) What is the angle between the vectors **A** and **B**?

(iii) What is the vector product of **A** and **B**?

11. A boy sees a deer run directly away from him. The deer is running with a speed of 20 mi/hr. The boy gives chase and runs with a speed of 8 mi/hr. What is the speed of the deer relative to the boy?

12. A man (O′) in the back of a 20 ft flat car moving at 30 ft/s records that a flashbulb is fired in the front of the flatcar two seconds after he has passed a man (O) on the ground. Find the coordinates of the event as determine by each observer.

Solution:

1. $\rho = 1.00 g/cm^3 = 1.00 \dfrac{1g}{1\ cm^3} = 1.00 \times \dfrac{1 \times 10^{-3} kg}{(10^{-2})^3} = 1000\ kg/m^3.$

2. (a) $v = 1450 mi/h = 1450 \times \dfrac{mi}{h} = 1450 \times \dfrac{mi}{3600} = 0.403 mi/s.$

   (b) Since 1 mil = 1.609 km = 1609m,
   $0.403\ mi/s = 0.403 \times 1609\ m/s \doteq 648$ m/s.

3. Since 1 yard = 0.9144 m, we have $8.0\ yd^3 = 8.0 \times (0.9144 m)^3 = 6.12 m^3.$

4. 1 furlong $= \dfrac{1}{8}$ mile $\Rightarrow v = 135000 \times \dfrac{\text{furlong}}{\text{fortnight}} = 135000 \times \dfrac{\frac{1}{8} mi}{14 \times 24 h} = 50.2$ mi/h

5. For an expression to be correct, all the terms will have the same dimensions.

   (i) $\lambda = vt$. Now, $[\lambda] = L$, $[vt] = LT^{-1}.T = L$.

   Since $[\lambda] = [vt]$, the expression is correct.

   (ii) $F = \dfrac{m}{a}$. Now, $[F] = MLT^{-2}$, $\left[\dfrac{m}{a}\right] = \dfrac{M}{LT^{-2}} = ML^{-1}T^2$.

   Since $[F] \neq \left[\dfrac{m}{a}\right]$, the equation is wrong.

Scanned by CamScanner

(iii) $v = (2gh)^{1/2}$. Now, $[v] = LT^{-1}$, $\left[(2gh)^{1/2}\right] = (LT^{-2}L)^{1/2} = LT^{-1}$

Since $[v] = \left[(2gh)^{1/2}\right]$, the formula is correct.

(iv) $h = \frac{v}{2g}$; $[h] = L$, $\left[\frac{v}{2g}\right] = \frac{[v]}{[2g]} = \frac{LT^{-1}}{LT^{-2}} = T^{-1}$.

Since $[h] \neq \left[\frac{v}{2g}\right]$, the formula is wrong.

6. (i) $s = C_1 t$; $\therefore [C_1] = \frac{[s]}{[t]} = \frac{L}{T} = LT^{-1}$ (ii) $s = \frac{1}{2}C_2 t^2$:

$\therefore [C_2] = \frac{[2s]}{[t^2]} = \frac{L}{T^2} = LT^{-2}$

(iii) $s = C_3 \sin C_4 t$: The argument of sine in this expression is $C_4 t$. Since the argument of any trigonometrical function is dimensionless, we have

$[C_4 t] = 1$. Hence, $[C_4] = \frac{1}{[t]} = \frac{1}{T} = T^{-1}$.

Also,

$[s] = [C_3][\sin C_4 t]$,

$\therefore L = [C_3] \times 1. \quad \Rightarrow [C_3] = L$

7. $f = cm^a k^b$;

Now, $[f] = \frac{1}{T}$, $[c] = 1$, since c is dimensionless constant, $[m] = M$.

The dimension of k is obtained using Hooke's law: $F = kx$.

Hence, $[k] = \frac{[F]}{[x]} = \frac{MLT^{-2}}{L} = MT^{-2}$

Writing the given equation in dimensional form, we have

$$T^{-1} = (1)M^a (MT^{-2})^b$$

$$T^{-1} = M^{a+b}T^{-2b}$$

Equating the powers of T and M on both sides, we have for T,

$$-1 = -2b \qquad \text{(i)}$$

Scanned by CamScanner

and for M, we have

$$0 = a + b \qquad \text{(ii)}$$

From (i), $b = \frac{1}{2}$; and from (ii), $a = -\frac{1}{2}$.

8. (a) $A = \sqrt{A_x^2 + A_y^2} = \sqrt{2.8^2 + (-4.10)} = 4.96$

$$\tan\Theta = \frac{-4.10}{2.8}$$

$$\therefore \Theta = \tan^{-1}(-4.96) = 304.33^\circ$$

(b) $A = \sqrt{A_x^2 + A_y^2} = \sqrt{(-5.40)^2 + (-9.45)^2} = 10.88$

$$\tan\Theta = \frac{-9.45}{-5.4} = 1.75$$

$$\therefore \Theta = \tan^{-1}(1.75) = 240.3^\circ$$

9. (i) $F_1 = 12\text{ N}, \theta_1 = 53^\circ; \Rightarrow F_{1x} = 12\cos 53^\circ = 7.22\text{N}, F_{1y} = 12\sin 53^\circ = 9.8\text{N}$

$F_2 = 6\text{ N}, \theta_1 = 240^\circ; F_{2x} = 6\cos 240^\circ = -3\text{ N}, F_{2y} = 6\sin 240^\circ = -5.2\text{N}$

$F_{3x} = 15\cos 320^\circ = 11.49\text{ N}, F_{3y} = 15\sin 320^\circ = -9.64\text{N}$

$$\therefore \sum F_X = 7.22 - 3 + 11.49 = 15.71\text{N}$$

$$\therefore \sum F_Y = 9.58 - 5.26 - 9.64 = -5.26\text{N}$$

$$\therefore F = \sqrt{\left(\sum F_x\right)^2 + \left(\sum F_y\right)^2} = \sqrt{15.71^2 + (-5.26)^2} = 16.57\text{ N}$$

$$\therefore \tan\Theta = \frac{-5.26}{15.71}$$

$$\therefore \Theta = \tan^{-1}(-0.3348) = -18.5^\circ$$

This means that the angle is in the second quadrant.

$$\therefore \Theta = 180^\circ - 18.5 = 161.5^\circ$$

Scanned by CamScanner

10. (i) $\bar{A}\cdot\bar{B} = (-2)(3) + (7)(-1) = -13.$

(ii) $\bar{A}\cdot\bar{B} = |\bar{A}||\bar{B}|\cos\theta = -13;$

where $|\bar{A}| = \sqrt{(-2)^2 + 7^2} = \sqrt{53}$, and $|\bar{B}| = \sqrt{(3)^2 + (-)^2} = \sqrt{10}$

$$\therefore \cos\theta = \frac{-13}{\sqrt{530}} = -0.5647$$

$$\theta = \cos^{-1}(-0.5647) = 55.6^\circ.$$

(iii) $\bar{A}\times\bar{B} = \hat{i}(A_yB_z - A_zB_y) + \hat{j}(A_zB_x - A_yB_z) + \bar{k}(A_xB_y - A_yB_x)$

$$= \hat{i}(7(0) - 0) + \hat{j}(0 - 0) + \bar{k}[(-2)(-1) - (7)(3)] = -19\hat{k}$$

11. The boy is the moving observer. Hence, $v_x = 20$ mi/h, $v = 8$ mi/h, $v'_x = ?$

$v'_x = v_x - v = 20 - 8 = 12$ mi/h.

12. $v = 30$ ft/s, $x' = 20$ ft,

$\therefore x = x' + vt' = 20 + 30(2) = 20 + 60 = 80$ ft

Therefore, the coordinate as measured by O is (x, t) = (80 ft, 2 s), While that of $O' = (x', t') = (20\text{ft}, 2\text{ s})$

Scanned by CamScanner

CHAPTER TWO
MECHANICS

2.1 Basic Definitions

We may define **Mechanics** as that branch of physics which deals with motions and states of material bodies. The subject is usually divided into three parts: **Kinematics, Dynamics** and **Statics.**

Kinematics deals with the motion of bodies without reference to mass or force. Dynamics is concerned with the study of the motion of a body together with the forces which cause the motion. Statics deals with bodies at rest relative to some given frames of reference, with the forces between them, and with the equilibrium of the system.

A **force** is defined as that which changes or tends to change a body's state of rest or motion. Thus, we may use a force either to bring a body to rest or to set it in motion. For this reason if we see a body changing its direction of motion, we know that a force must be acting on it. Similarly, if we see a body at rest, we know that the total force on the body is zero.

A **body** in mechanics is anything to which we can apply a force. it may be a stone, a book, a pen or even a door. A body may bend, sag, expand, or compress when a force is applied to it. These distortions, which take place as a result of the applied force, may obscure the basic principles involved in mechanics. For this reason, we introduce the idea of a **rigid body**, i.e. a body which does not undergo any distortion resulting from the forces which act upon it.

2.2 Distance, Speed, Displacement And Velocity

A distance is travelled whenever there is a change of position. Speed is defined as the time rate of change of distance. As an equation, we write

$$\text{Speed} = \frac{\text{change in distance}}{\text{time}}$$

Scanned by CamScanner

Example 2.1:

A man takes 2.0 hours to travel a distance of 180 km away. What is his average speed?

Solution: Distance travelled = 180 km, time taken = 2 hours.

$$\text{Average Speed} = \frac{\text{Total distance traveled}}{\text{Time taken}} = \frac{180.0\,\text{km}}{2\,\text{hours}} = 9.0\ \text{km/h}$$

We can express the speed in ***m/s*** as follows:

$$\text{Speed} = \frac{90\,\text{km}}{\text{h}} = \frac{90(1000\,\text{m})}{(60)(60)\,\text{s}} = 2.50\ \text{m/s}$$

If a body travels in a given direction, the distance travelled in the specified direction is called **Displacement.**

Examples of displacements are:

(i) 30 km due north

(ii) 20 m towards theatre 3.

Velocity is defined as the time rate of change of displacement:

$$\text{velocity} = \frac{\text{change of displacement}}{\text{time taken}}$$

Example 2.2:

A man takes 2.0 hours to drive to a distant city 180 km away. What is his average velocity?

Solution: Displacement = 180.0 km, time = 2.0 hours.

$$\text{velocity} = \frac{\text{change in displacement}}{\text{time taken}}$$

$$= \frac{180.0\ \text{km}}{2\ \text{hours}} = 90\ \text{km/h} = (90)\frac{1000\,\text{m}}{(60)(60)\,\text{s}} = 2.5\ \text{m/s}$$

Scanned by CamScanner

Note the difference between speed and velocity. In example 2.1, no direction is given as to where the man travelled. Thus, the change in distance per unit time is simply speed. In example 2.2, the man travelled to a distant city. In this case, the direction of travel is known. Thus, the change in distance travelled in a specified direction per unit time is velocity. Therefore, distance and speed are scalar quantities, while velocity and displacement are vector quantities.

2.3 Accelerated Motion

Acceleration is that part of kinematics dealing with changes in speed or velocity. It is defined as the time rate of change of velocity. As an equation, we write

$$\text{acceleration} = \frac{\text{change in velocity}}{\text{elapsed time}}$$

If the velocity changes by equal amounts in equal times, no matter how small the time intervals may be, the acceleration is said to be ***uniform***.

Example 2.3:

A car moving with a velocity of 6.0 m/s at point A accelerates uniformly and when it reaches point B its speed becomes 30.0 m/s. If the time taken to go from A to B is 4.0 s, what is the acceleration?

Solution:

Initial velocity = 6.0 m/s, final velocity = 30.0 m/s, time taken = 4.0 s.

$$\text{acceleration} = \frac{\text{change in velocity}}{\text{time taken}}$$

$$= \frac{\text{final velocity} - \text{initial velocity}}{\text{time taken}} = \frac{30.0 - 6.0}{4.0} = 6.0 \text{ m/s}^2$$

2.4 Deceleration

When a body is slowing down, the initial velocity is greater than the final velocity, and the acceleration will thus be negative. This negative acceleration is called **deceleration.**

Scanned by CamScanner

Example 2.4

In going up a long steep hill, a car slows down from 86.0 km/h to 38.0 km/h in 4.0 minutes. Find the acceleration.

Solution:

Initial velocity = 86.0 km/h = $(86.0)\dfrac{(1000\text{m})}{(60)(60\text{ s})}$ = 23.9 m/s

Final velocity = 38.0 km/h = $(38.0)\dfrac{(1000\text{m})}{(60)(60\text{ s})}$ = 10.6 m/s

Time taken = 4.0 min = 4.0 x 60 seconds = 240 seconds.

$$\therefore \text{acceleration} = \frac{\text{final velocity} - \text{initial velocity}}{\text{time taken}}$$

$$= \frac{10.6 - 23.9}{240} = -0.06 \text{ m/s}^2$$

2.5 Motion With Constant Acceleration

2.5.1 Equations Of Motion

Let us denote *u* to be the initial velocity of an object, *v* its final velocity, *t* the time taken and a the acceleration.

If this object which is moving with an initial velocity *u*, accelerates uniformly until its velocity reaches v in time t, then

its change of velocity = final velocity – initial velocity = v – u,

The acceleration a is therefore

$$a = \frac{\text{change in velocity}}{\text{time taken}} = \frac{v - u}{t}$$

Cross-multiplying, we have

$$at = v - u.$$

$$\therefore v = u + at \qquad (2.1)$$

Scanned by CamScanner

Now, the average velocity $\bar{v}$ is given by

$$\bar{v} = \frac{u+v}{2}$$

The distance s travelled by the object in time t is

$$s = \text{average velocity x time} = \left(\frac{v+u}{2}\right)t$$

Substituting the value of v from equation (2.1), we have

$$s = \left(\frac{u+at+u}{2}\right)t = \frac{2ut+at^2}{2} = ut + \frac{1}{2}at^2$$

$$\therefore s = ut + \frac{1}{2}at^2 \qquad (2.2)$$

From equation (2.1), $t = \frac{v-u}{a}$.

Substituting *t* into equation (2.2), we have

$$s = ut + \frac{1}{2}at^2 = u\left(\frac{v-u}{a}\right) + \frac{1}{2}a\left(\frac{v-u}{a}\right)^2$$

$$= \frac{uv}{a} - \frac{u^2}{a} + \frac{1}{2}a\frac{(v^2-2uv+u^2)}{a^2}$$

On simplifying, we have

$$2as = -u^2 + v^2$$

$$\therefore v^2 = u^2 + 2as \qquad (2.3)$$

Equations (2.1), (2.2) and (2.3) are the equations of motion under uniform acceleration.

Scanned by CamScanner

Example 2.5:

A car accelerates from rest to a speed of 10 m/s in a time of 8s. What is its acceleration and how far will it go in this time? Assume the acceleration to be constant.

Solution:

The car accelerates from rest. This means that u = 0.
Final velocity v = 10 m/s, time t = 8s.

$$\therefore \text{acceleration } a = \frac{v-u}{t} = \frac{(10-0)}{8s} = 1.25\ m/s^2$$

$$\text{Distance travelled } s = ut + \frac{1}{2}at^2 = (0)(8) + \frac{1}{2}(1.25)^2 = 40m$$

Example 2.6:

An electron moving at a speed of 5×10^6 m/s is shot through a sheet of paper, which is 2.1×10^{-4} cm thick. The electron emerges from the paper with a speed of 2×10^6 m/s. Find the time taken by the electron to pass through the sheet. Assume the acceleration to be uniform.

Solution:

$u = 5 \times 10^6$ m/s, $v = 2 \times 10^6$ m/s, $s = 2.1 \times 10^{-4}$ cm $= 2.1 \times 10^{-6}$ m/s, t = ?

Substituting these values in $v^2 = u^2 + 2as$, we have

$$\therefore (2\times10^6)^2 = (5\times10^6)^2 + 2a(2.1\times10^{-6})$$

$$\therefore a = \frac{(2\times10^6)^2 - (5\times10^6)^2}{2(2.1\times10^{-6})} = -5 \times 10^{18}\ m/s^2$$

Substituting $u = 5 \times 10^6$ m/s, $v = 2 \times 10^6$ m/s and $a = -5 \times 10^{18}$ m/s^2 in $v = u + at$, we have

$$2 \times 10^6 = 5 \times 10^6 + (-5 \times 10^{18})t$$

$$\therefore t = \frac{2\times10^6 - 5\times10^6}{-5\times10^{18}} = 6 \times 10^{-13}\ s$$

Scanned by CamScanner

2.5.2 Using Graphs To Describe Motion

Graphs provide useful information about the motion of an object. If displacement is plotted against time, the graph obtained is a displacement–time graph. If velocity is plotted against time, the graph obtained is a velocity-time graph.

2.5.2.1 Displacement –Time Graph

In fig. 2.1, OA is the graph of displacement of a body moving with uniform velocity against time. In moving from O to Q in this graph, the change in the displacement is PQ, while the change in the time is OP. The change in the displacement divided by the change in the time gives the velocity.

$$\text{velocity} = \frac{\text{change in displacement}}{\text{change in time}} = \frac{PQ}{OP}$$

But from the graph, $\frac{PQ}{OP}$ is equal to the slope or gradient of the line OA.

Hence, ***the slope or gradient of a displacement-time graph represents the velocity of the body.***

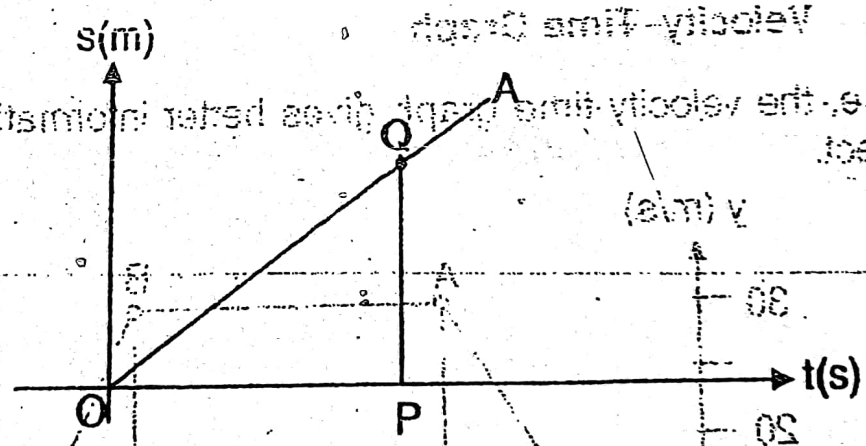

Fig. 2.1

If the displacement–time graph is a curve and not a straight line, the velocity is not uniform. Fig. 2.2 shows the displacement–time curve for the motion of an object thrown vertically upward in the air.

Scanned by CamScanner

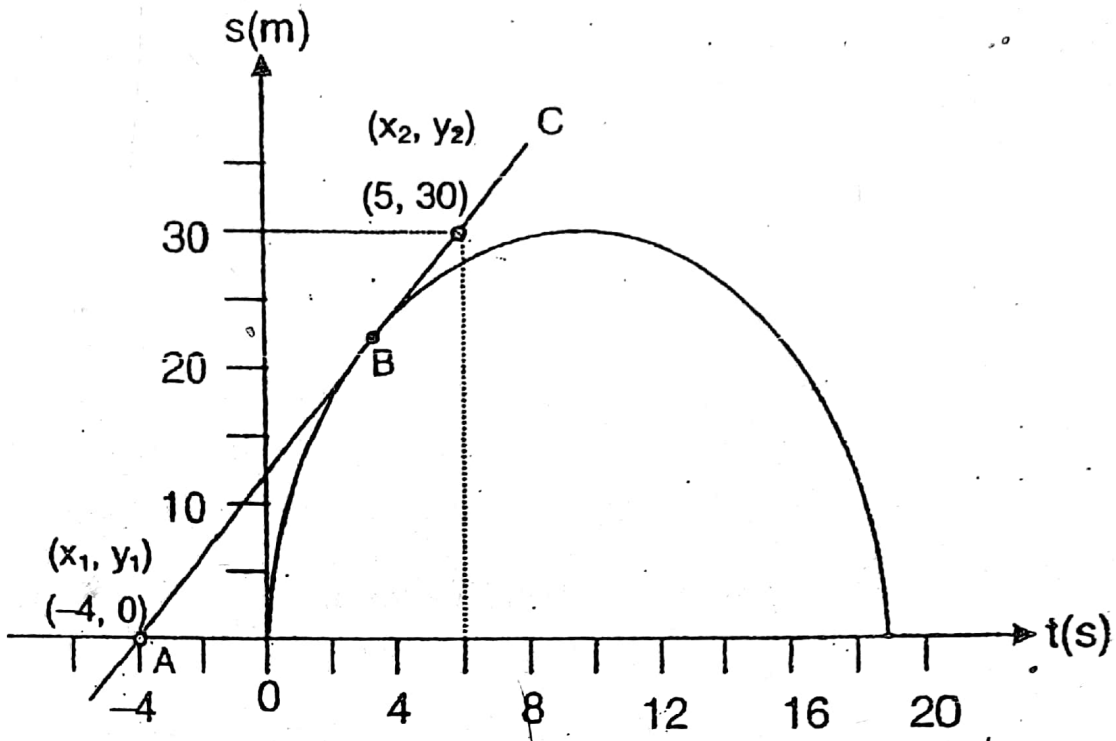

Fig. 2.2

The velocity at any point on the graph is determined by the gradient of the line tangent to the curve at that point. For example, the velocity at point B in fig. 2.2 is equal to the gradient of line the AC:

$$\therefore \text{ velocity at point B} = \text{the slope at point B} = \frac{y_2 - y_1}{x_2 - x_1} = \frac{30-0}{5-(-4)} = = 3.33 \text{ m/s}$$

2.5.2.2 Velocity–Time Graph

In practice, the velocity-time graph gives better information about the motion of an object.

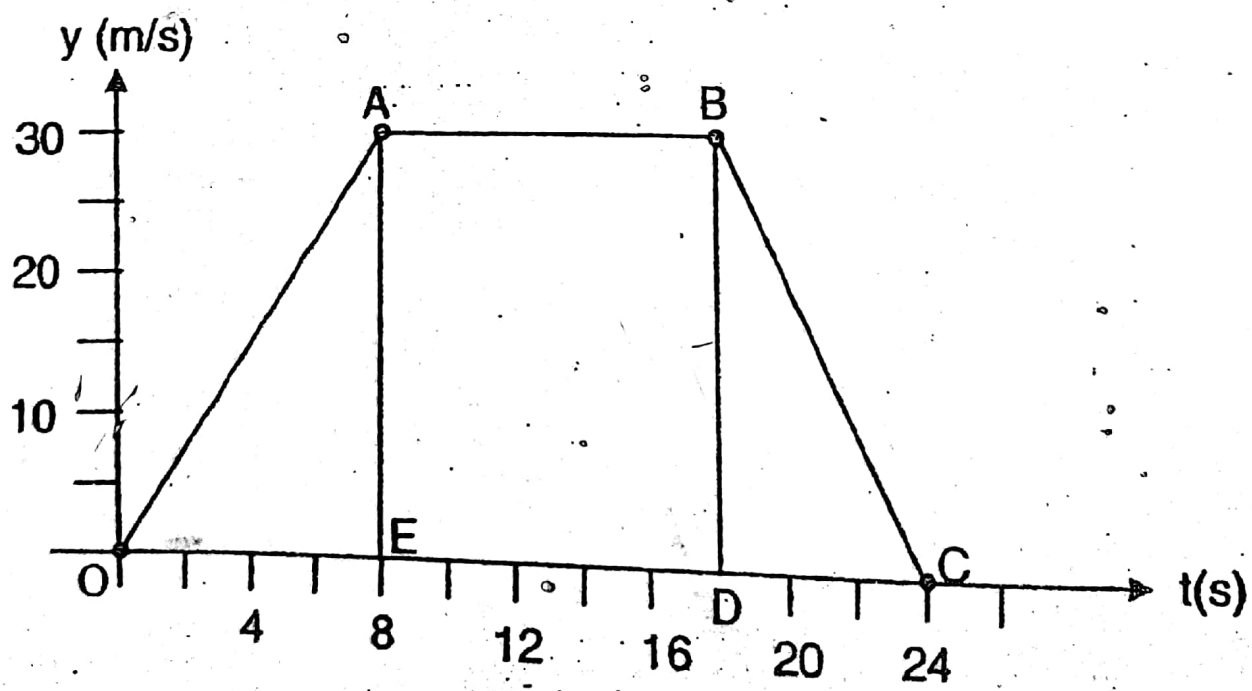

Fig. 2.3

Scanned by CamScanner

In fig. 2.3, OA represents motion with uniform acceleration. In moving from O to A in this graph, the change in velocity is AE, while the change in the time is OE. Hence,

$$\text{Acceleration} = \frac{\text{change in velocity}}{\text{change in the time}} = \frac{AE}{OE}$$

But from fig. 2.3, $\frac{AE}{OE}$ is equal to the gradient of the line OA. This shows that

the gradient or slope of a velocity–time graph represents the acceleration of the body.

The distance travelled by an object can be found from a velocity-time graph. At the origin O, the initial velocity u is zero. At point A, the final velocity is v. The average velocity $\bar{v}$ is therefore,

$$\bar{v} = \frac{u+v}{2} = \frac{0+v}{2} = \frac{v}{2}$$

The distance s travelled is given by

$$s = \text{average velocity} \times \text{time} = \frac{v}{2}\,t$$

But from fig. 2.3, v = the height AE of the triangle OAE, while OE is the base of the triangle. Therefore, we can write

$$s = \frac{AE}{2} \times OE$$

or

$$s = \frac{OE}{2} \times AE$$

$$= \frac{1}{2}(\text{base})(\text{height}) = \text{area of the triangle OAE}$$

This shows that ***the area under a velocity-time graph gives the distance travelled.***

Scanned by CamScanner

Example 2.7:

A train, starting from rest, accelerates uniformly at 2 m/s for 15 s. It then travels for 30 s at the velocity reached, and is brought to rest with uniform retardation after 10 s more. Draw a velocity-time graph of the motion. From the graph, (i) find the acceleration during the first 15 seconds (ii) the total distance travelled by the train and (iii) its retardation.

Solution: $u = 0$, $a = 2$ m/s, $t = 15$ s.

The final velocity reached after 15 s from the start of the motion is

$$v = u + at = 0 + 2(15) = 30 \text{ m/s}$$

Hence, the coordinates of point A in fig. 2.4 are (15 s, 30 m/s).

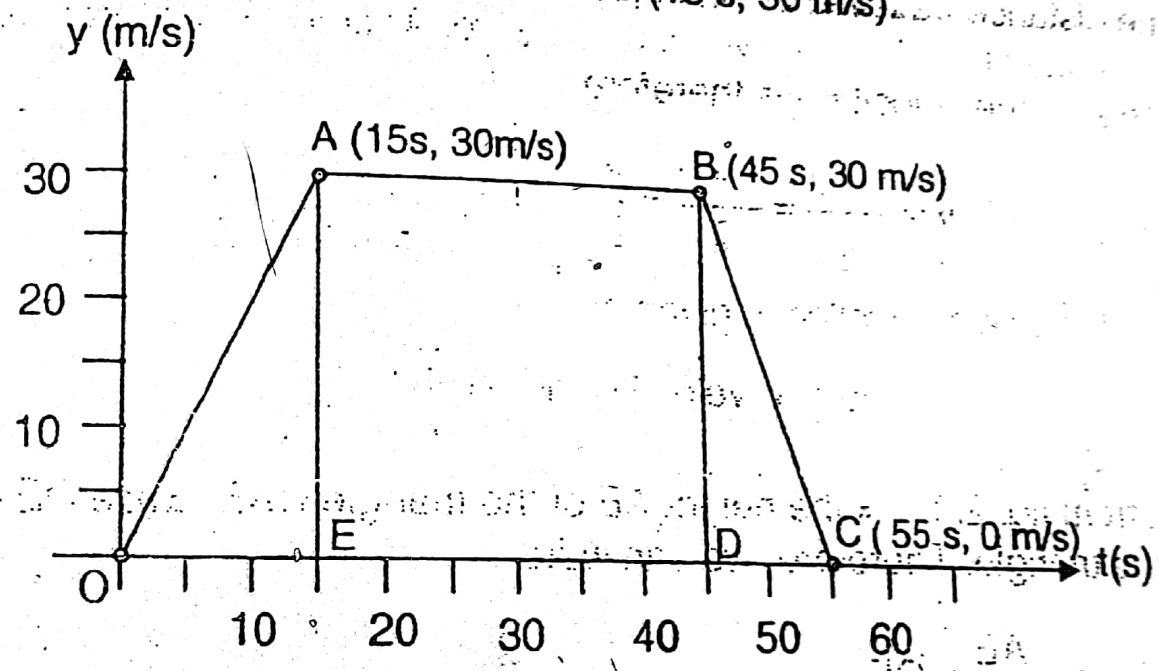

Fig. 2.4

The train travelled at the velocity reached, i.e. at 30 m/s, for 30 s. Hence, the coordinates of point B are (45 s, 30 m/s).

The train is brought to rest after 10 s. So, the coordinates of point C are (55 s, 0).

(i) The acceleration during the first 15 seconds is equal to the slope of the line OA:

$$\text{Slope of line OA} = \frac{y_2 - y_1}{x_2 - x_1} = \frac{(30-0)\text{ m/s}}{(15-0)\text{ s}} = 2 \text{ m/s}^2,$$

Scanned by CamScanner

(ii) The total distance travelled is equal to the total area under the velocity-time graph in fig. 2.4:

Total area = area of triangle OAE + area of rectangle ABDE + area of triangle BCD

$$= \frac{1}{2}(\text{base})(\text{height}) + \text{length} \times \text{breadth} + \frac{1}{2}(\text{base})(\text{height})$$

$$= \frac{1}{2}(15\ \text{s})(30\ \text{m/s}) + (30\ \text{s})(30\ \text{m/s}) + \frac{1}{2}(10\ \text{s})(30\ \text{m/s}) = 1275\ \text{m}$$

(iii) The retardation of the train is given by the slope of the line BC:

$$\text{Slope of the line BC} = \frac{y_2 - y_1}{x_2 - x_1} = \frac{(0-30)\text{m/s}}{(55-45)\text{s}} = -3\ \text{m/s}^2$$

Example 2.8:

A car, starting from rest, is uniformly accelerated at 0.15 m/s^2 until it reaches a speed of 15 m/s. It travels at this speed for 3 min and is then uniformly retarded so as to come to rest 8 min after starting. Plot the velocity-time graph of the motion and use the graph to determine the average speed of the car.

Solution: u = 0, a = 0.15 m/s^2, v = 15 m/s.

Substituting these values in v = u + at, we have

$$15 = 0 + (0.15)t$$

Solving, we have t = 100 s. The uniformly accelerated motion is described by the line OA in fig. 2.5.

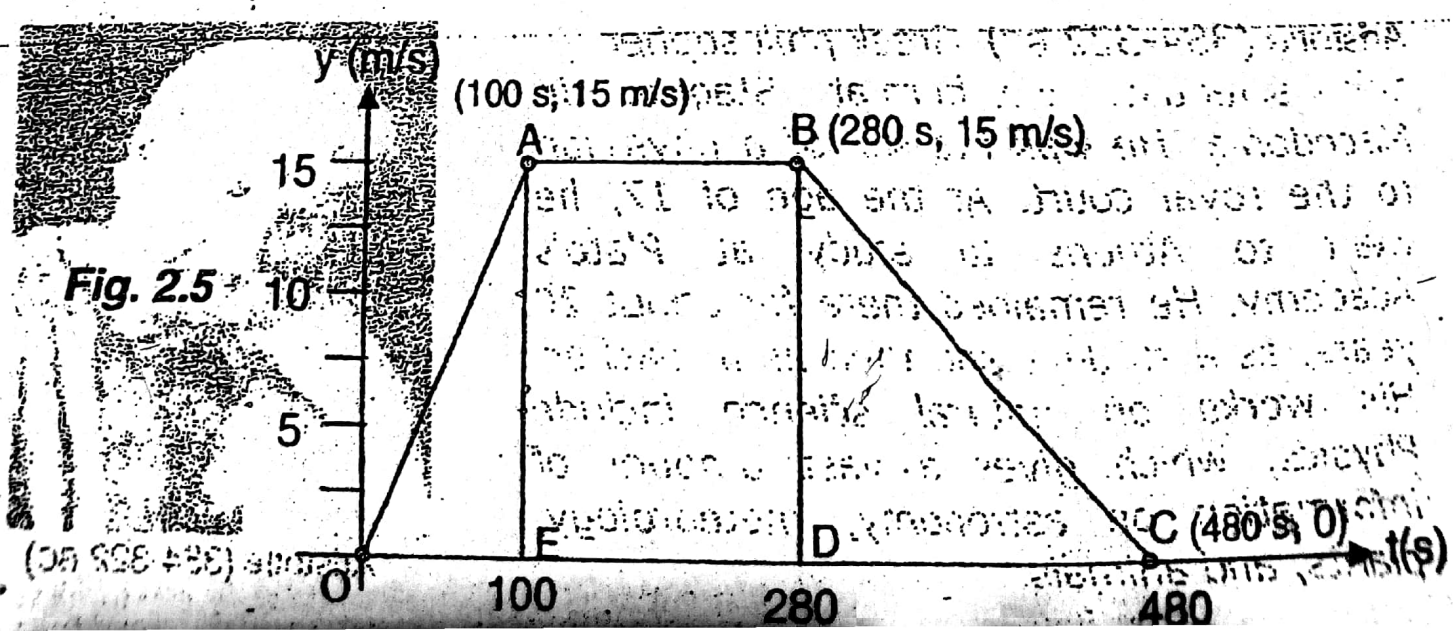

Fig. 2.5

Scanned by CamScanner

For the motion with constant velocity, $t = 3$ min $= 180$ s. The motion is described the line AB in fig. 2.5.

The car came to rest 8 min after starting. This is the total time for the motion. Since 8 min equals 480 s, it means that the time taken by the car for the uniformly retarded motion is (480 –280) s = 200s. The motion is described by the line BC.

The total distance travelled is given by the total area under the graph:

total area = area of triangle OAE + area of rectangle ABDE + area of triangle BCD

$$= \frac{1}{2}(100)(15) + (180)(15) + \frac{1}{2}(200)(15) = 4950 \text{ m}$$

Therefore, the total distance travelled is 4950 m.

The average speed $\bar{v}$ is given by

$$\bar{v} = \frac{\text{total distance travelled}}{\text{total time taken}} = \frac{4950 \text{ m}}{480 \text{ s}} = 10.3 \text{ m/s}.$$

2.6 Freely Falling Bodies

The problem of falling bodies had been addressed in classical Greek times by Aristotle (384–322 BC). According to him, heavy bodies fall down faster than lighter ones. It took the world nearly 2000 years to produce a challenger of Aristotle's Scientific Teachings.

Aristotle (384-322 BC), Greek philosopher and scientist, was born at Stagira, in Macedonia. He was the son of a physician to the royal court. At the age of 17, he went to Athens to study at Plato's Academy. He remained there for about 20 years, as a student and then as a teacher. His works on natural science include Physics, which gives a vast amount of information on astronomy, meteorology, plants, and animals.

Aristotle (384-322 BC)

Scanned by CamScanner

In the sixteenth century, a new approach towards scientific thought emerged. During this period, new ideas began to develop in science, and the Aristotelian philosophy was being overturned. Science began to be guided by conclusions based on experiments and observations, coupled with logic and reason.

By applying this approach, Galileo Galilei (1564 –1642), was able to establish mechanics as a mature science through his precise measurements and well-constructed logical arguments, rather than on metaphysical principles and formal logic. In contradiction to Aristotelian lore, Galileo put forward the hypothesis that all objects falling near the Earth's surface accelerate at the same rate. This means that all objects released from the same height above the Earth will fall to the ground in equal times. Galileo tested this prediction and found it to be true. The acceleration with which all bodies fall freely near the earth surface is caused by the pull of the Earth.

The value of this acceleration is given the symbol g and is equal to – 9.80 m/s^2. The negative sign means that the acceleration due to gravity is acting downward.

Galileo Galilei (1564–1642), an Italian physicist and astronomer, was born near Pisa, on February 15, 1564. At the age of eighteen, we find him observing the oscillations of a chandelier, and later formulating the laws of the pendulum. He gave us too, the laws of accelerated motion and of falling bodies. He invented the practical telescope. He was one of the greatest of the world's scientists

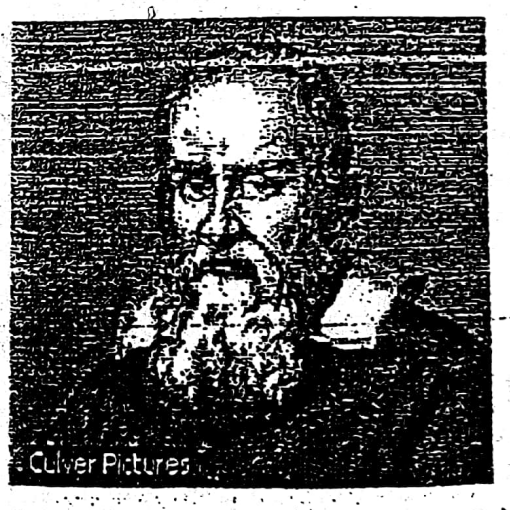

Galileo Galilei (1564 –1642)

Example 2.9:

A boy drops several stones into a well. Upon measuring the time it takes each stone to hit the water, he finds an average of 2.5 s.

(a) How deep is the well?
(b) With what speed does each stone hit the water?

Scanned by CamScanner

Solution: Let the dept of the well be s_y.

(a) The stones are dropped from rest; hence $u = 0$.

Now, time $t = 2.5$ s, $g = -9.80$ m/s^2.

$$\therefore\ s_y = u_y t + \frac{1}{2}a_y t^2 = 0 + \frac{1}{2}(-9.8)(2.5)^2 = -30.63 \text{ m}$$

The negative sign indicates that the bottom of the well is below the earth's surface.

(b) $v = u + at = 0 + (-9.8)(2.5) = -24.50$ m/s

2.7 Projectile Motion

An object moving freely in the vertical direction experiences the downward acceleration due to gravity. In the absence of air resistance or other retarding effects, the object travels horizontally with constant horizontal velocity (i.e. zero acceleration).

Suppose an object (a projectile) is projected with an initial velocity **u** (called the ***muzzle velocity***) at an angle θ with the horizontal (fig.2.6). This object undergoes two simultaneous independent motions. It moves horizontally with constant speed (zero acceleration) and at the same time, it moves vertically upward with downward acceleration $g = 9.8$ m/s^2.

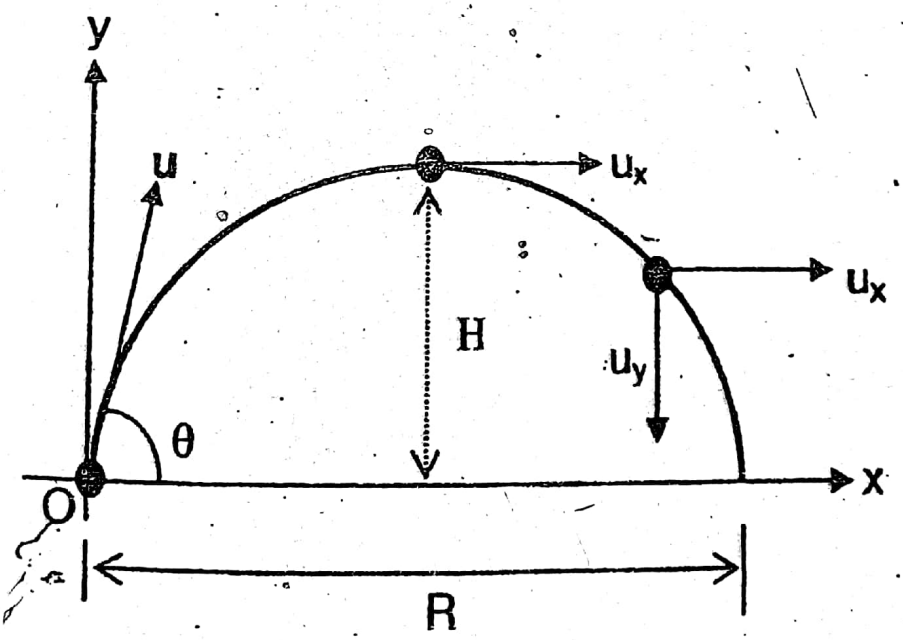

Fig. 2.6

Scanned by CamScanner

We can therefore divide the motion of the projectile into x– and y – motions. Any quantity that is a vector, will be resolved into x and y components and then treat the motions separately.

*Resolving the initial velocity **u***

The initial velocity of projection ***u*** makes an angle of θ with the x – axis.

∴ Initial velocity in the x – direction $u_x = u \cos \theta$,
∴ initial velocity in the y – direction $u_y = u \sin \theta$

*Resolving the acceleration due to gravity **a = g***

The acceleration due to gravity **g** is acting vertically downward. Therefore, **g** makes an angle of 270^0 with the x – axis, fig. 2.7.

Fig. 2.7

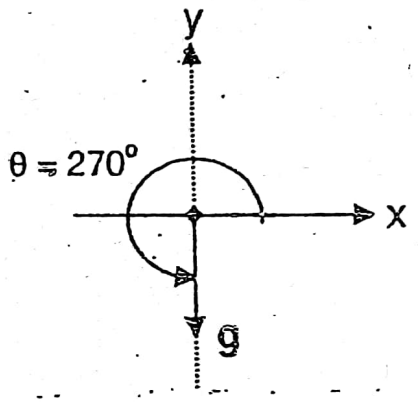

The magnitude of g is g. Hence the *x*-component of the acceleration a is

$$a_x = a \cos \theta = g \cos 270^0 = 0,$$

and the y – component a_y is

$$a_y = a \sin \theta = g \sin 270^0 = -g$$

Vertical Motion

For the vertical motion, the velocity v_y after time t is

$$v_y = u_y + a_y t = u \sin \theta - gt.$$

$$\therefore v_y = u \sin \theta - gt \qquad (2.4)$$

Scanned by CamScanner

When the projectile reaches its maximum height, the final velocity is zero. Thus, from equation (2.4),

$$0 = u \sin\theta - gt$$

$$\therefore\ t = \frac{u\sin\theta}{g} \qquad (2.5)$$

This is the time to reach maximum height H.

The vertical distance y travelled by the projectile is

$$y = u_y t + \frac{1}{2}a_y t^2 = (u\sin\theta)t + \frac{1}{2}(-g)t^2$$

$$\therefore\ y = (u\sin\theta)t - \frac{1}{2}gt^2 \qquad (2.6)$$

If H is the maximum height attained, then, since the initial velocity is $u\sin\theta$ and the final velocity is zero, we have, from the third equation of motion,

$$v_y^2 = u_y^2 + 2a_y y$$

$$0 = (u\sin\theta)^2 - 2gH$$

Simplifying, we have

$$H = \frac{u^2\sin^2\theta}{2g} \qquad (2.7)$$

This is the maximum height attained.

When the projectile returns to the ground, y = 0 and $t = t_t$, the total time of flight. Substituting y = 0 and $t = t_t$ in equation (2.6), we have

$$0 = (u\sin\theta)t_t - \frac{1}{2}gt_t^2$$

$$\frac{1}{2}gt_t^2 = (u\sin\theta)t_t$$

$$\therefore\ t_t = \frac{2u\sin\theta}{g} \qquad (2.8)$$

This is the total time of flight.

Scanned by CamScanner

Horizontal Motion

After time t the final velocity along the horizontal x – direction is

$$v_x = u_x + a_x t = u\cos\theta + (0)t$$

$$\therefore v_x = u\cos\theta \qquad (2.9)$$

Equation (2.9) shows that the horizontal component of the velocity in projec motion is independent of time, i.e. it is constant throughout the motion. T horizontal distance travelled by the projectile is

$$s_x = x = u_x t + a_x t$$
$$= (u\cos\theta)\, t + (0)t$$

$$\therefore x = (u\cos\theta)t \qquad (2.10)$$

The maximum distance $x_{max} = R$ travelled along the horizontal direction is

R = horizontal velocity x total time of flight

$$= (u\cos\theta).\frac{2u\sin\theta}{g}$$

$$= \frac{u^2(2\sin\theta\cos\theta)}{g} = \frac{u^2\sin 2\theta}{g}$$

$$\therefore R = \frac{u^2\,\mathrm{Sin}2\theta}{g} \qquad (2.11)$$

We can eliminate t in equation (2.6) as follows: from (2.10),

$$t = \frac{x}{u\cos\theta}$$

Substituting for t in equation (2.6), we have

$$y = (u\sin\theta)\left(\frac{x}{u\cos\theta}\right) - \frac{gx^2}{2u^2\cos^2\theta}$$

$$\therefore y = (\tan\theta)x - \left(\frac{g}{2u^2\cos^2\theta}\right)x^2 \qquad (2.12)$$

Scanned by CamScanner

Equation (2.12) is similar to the equation of a parabola,

$$y = ax + bx^2.$$

Hence the path or ***trajectory*** of a projectile is a parabola. From equation (2.11), for a given velocity of projection, the range is maximum if $\sin 2\theta = 1$.

$$\text{i.e. } max\,[R] = max\left[\frac{u^2 \sin 2\theta}{g}\right] = \frac{u^2}{g} max\,[\sin 2\theta]$$

Since max [sin 2θ] = 1, it means

$$2\theta = 90^0 \text{ or } \theta = 45^0.$$

Therefore, for maximum range, $\theta = 45^0$. Equation (2.11) then gives the expression for the maximum range R_{max}:

$$\therefore R_{max} = \frac{u^2}{g}$$

Example 2.10:

A particle is projected with a speed of 39.2 m/s at an elevation of 30°

(i) Find its greatest height,
(ii) The range on a horizontal plane,
(iii) The time of flight, and the
(iv) Velocity (its magnitude and direction) after 0.5 sec.

Solution:

(i) $u = 39.2$ m/s, $\theta = 30^0$

$$\text{Greatest height } H = \frac{u^2 \sin^2\theta}{2g} = \frac{(39.2)^2 \sin^2 30^0}{2(9.8)} = 196 \text{ m.}$$

(ii) $$R = \frac{u^2 \sin 2\theta}{g} = \frac{(39.2)^2 \sin(2 \times 30)}{9.8} = 136 \text{ m}$$

(iii) $$\text{Total time of flight } t_f = \frac{2u\sin\theta}{g} = \frac{2(39.2)\sin 30^0}{9.8} = 4 \text{ s.}$$

Scanned by CamScanner

(iv) $t = 0.5$ s,

$u_x = u\cos\theta = 39.2\cos 30^0 = 34$ m/s

$\therefore v_x = u_x + a_x t = u\cos\theta + a_x t$

$= 39.2\cos 30^o + (0)(0.5) = 34$ m/s

$v_y = u_y + a_y t = u\sin\theta - gt = 39.2\sin 30^0 - 9.8\,(0.5) = 14.7$ m/s.

$\therefore v^2 = v_x^2 + v_y^2 = 34^2 + 14.7^2 = 1372.09$

$\therefore v = 37$ m/s.

To get the direction of the velocity v, we use

$$\tan\theta = \frac{v_y}{v_x} = \frac{14.7}{34}$$

$\therefore \theta \approx 26°48'$

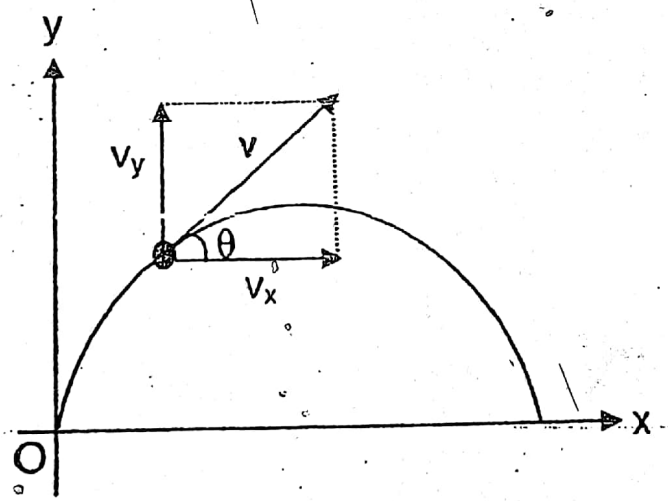

Fig. 2.8

Example 2.11:

A particle A is projected horizontally at 50 m/s from the top of a tower 100 m high. At the same instant, another particle B is projected from the bottom of the tower, in the same vertical plane, at 100 m/s with elevation 60^0.

(a) After how many seconds will the particles collide?

(b) Determine the point where they collide.

Scanned by CamScanner

Solution:

(a) For particle A, $\theta = 0^o$, $u = 50$ m/s,

$u_y = u \sin\theta = 50 \sin 0^o = 0$,

$u_x = u \cos\theta = 50 \cos 0^o = 50$ m/s.

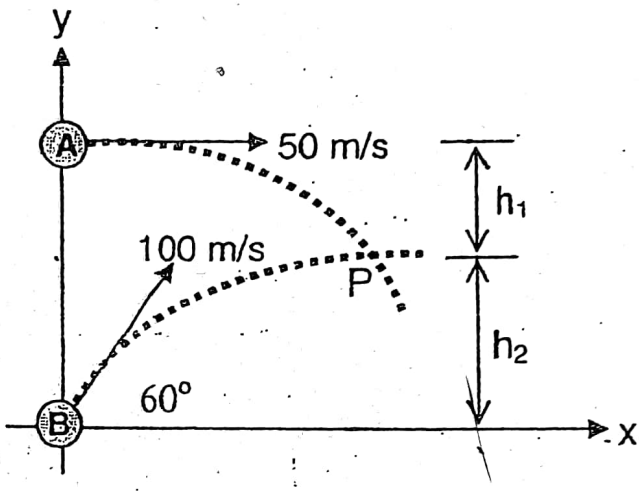

Fig. 2.9

Let the h_1 be the vertical downward distance moved by particle A after colliding with B. Since particle A is moving downward $s_y = -h_1$. Hence using

$$s_y = u_y t + \frac{1}{2} a_y t^2,$$

we have

$$-h_1 = (0)t - \frac{1}{2} g t^2$$

$$\therefore h_1 = \frac{1}{2} g t^2 \qquad \text{(i)}$$

For particle B, $\theta = 60^o$, $u = 100$ m/s. Therefore,

$u_x = u \cos\theta = 100 \cos 60^o = 50$ m/s,

$u_y = u \sin\theta = 100 \sin 60^o = 86.67$ m/s.

The vertical upward distance h_2 moved by particle B after colliding with A is

$$h_2 = (u \sin\theta)t - \frac{1}{2} g t^2 = (100 \sin 60^o)t - \frac{1}{2} g t^2$$

$$\therefore h_2 = (100 \sin 60^o)t - \frac{1}{2} g t^2 \qquad \text{(ii)}$$

Scanned by CamScanner

Adding equations (i) and (ii), we have

$$h_1 + h_2 = \frac{1}{2}g\,t^2 + (100 \sin 60^\circ)t - \frac{1}{2}g\,t^2 = (100)(0.866)t$$

But $h_1 + h_2 = 100$.

$$\therefore\ 100 = 100(0.866)\,t$$

$$\therefore\ t = \frac{100}{86.6} = 1.16\text{s}$$

(b) $x = (u_x \cos\theta)t = 100(\cos 60^\circ)(1.16) = 58$ m

The vertical distance $y = h_2$ is obtained using equation (ii):

$$h_2 = (100 \sin 60^\circ)(1.16) - \frac{1}{2}(9.8)(1.16) = 93 \text{ m}$$

Thus, the particles will collide at point P whose coordinates are (58 m, 93 m).

Example 2.12:

A missile is projected upwards from the top of a building of height 100 m and it hits the ground at a point X. If the initial velocity of projection is 200 m/s at an angle of 60° to the horizontal, calculate:

(i) the maximum height of the missile above the ground,
(ii) the horizontal distance from the foot of the building to the point X,
(iii) the time of flight.

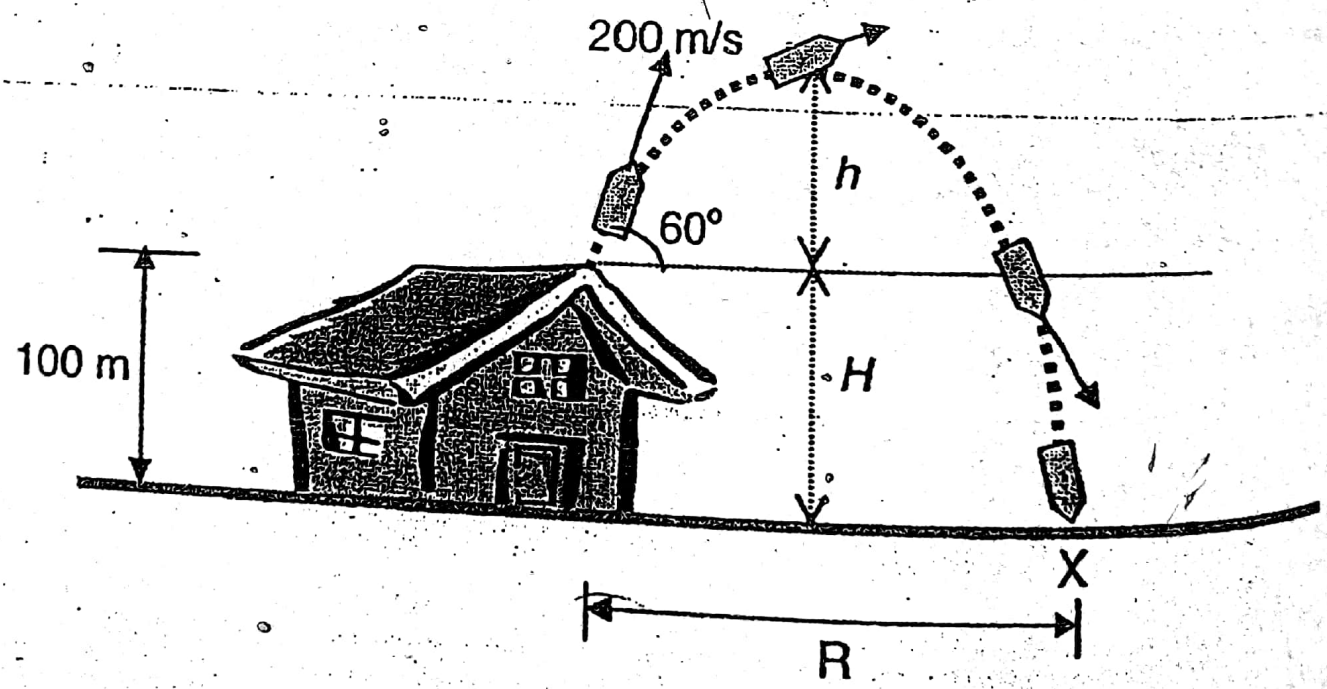

Scanned by CamScanner

Y – Motion: *(Motion normal to the plane)*

The velocity component normal to the plane after time *t* is

$$v_y = u_y + a_y t$$

$$\therefore v_y = u \sin\beta - gt\cos\theta \qquad (2.17)$$

The vertical distance moved is

$$y = u_y t + \frac{1}{2} a_y t^2$$

$$\therefore y = (u \sin\beta)t - \frac{1}{2} gt^2 \cos\theta \qquad (2.18)$$

To find the total time of flight t_t on the plane, we set y = 0:

$$\therefore 0 = (u \sin\beta)t_t - \frac{1}{2} gt_t^2 \cos\theta$$

$$\therefore t_t = \frac{2u\sin\beta}{g\cos\theta} \qquad (2.19a)$$

X-Motion: *(Motion parallel to the plane)*

The velocity after time t is given by

$$v_x = u_x + a_x t \qquad (2.19b)$$

Using equations (2.13) and (2.15), equation (2.19b) becomes

$$v_x = u\cos\beta - g\sin\theta \qquad (2.20)$$

The horizontal distance travelled by the projectile after time t is

$$x = u_x t + \frac{1}{2} a_x t^2$$

$$\therefore x = (u\cos\beta)t - \frac{1}{2}(g\sin\theta)t^2 \qquad (2.21)$$

The maximum value of x, i.e. the range R, in the upward direction, is obtained

Scanned by CamScanner

by substituting $t = t_1 = \frac{2u\sin\beta}{g\cos\theta}$, from equation (2.19a) into equation (2.21):

$$x_{max} = (u\cos\beta)\frac{2u\sin\beta}{g\cos\theta} - \frac{1}{2}(g\sin\theta)\left(\frac{2u\sin\beta}{g\cos\theta}\right)^2$$

$$x_{max} = R = \frac{2u^2\cos\beta\sin\beta}{g\cos\theta} - \frac{g\sin\theta}{2}\frac{.4u^2\sin^2\beta}{g^2\cos^2\theta}$$

$$= \frac{2u^2\cos\theta\cos\beta\sin\beta}{g\cos^2\theta} - \frac{\sin\theta}{2}\frac{.4u^2\sin^2\beta}{g\cos^2\theta}$$

$$= \frac{2u^2\sin\beta}{g\cos^2\theta}\{\cos\beta\cos\theta - \sin\beta\sin\theta\}$$

$$\therefore R = \frac{2u^2\sin\beta\cos(\beta+\theta)}{g\cos^2\theta} \qquad (2.22)$$

The range on the plane, in the downward direction, is found by changing the sign of θ in equation (2.22):

$$R = \frac{2u^2\sin\beta\cos(\beta-\theta)}{g\cos^2\theta}$$

If the maximum range up the plane is required, we set the derivative of R with respect to β equal to zero and then solve for β:

$$\frac{dR}{d\beta} = \frac{2u^2}{g\cos^2\theta}\{-\sin\beta\sin(\beta+\theta) + \cos(\beta+\theta)\cos\beta\} = 0$$

$$\therefore -\sin\beta\sin(\beta+\theta) + \cos(\beta+\theta)\cos\beta = 0$$

But $\cos(\beta+\theta)\cos\beta - \sin\beta\sin(\beta+\theta) = \cos[(\beta+\theta)+\beta]$

$$\therefore \cos(\beta+\theta+\beta) = \cos(2\beta+\theta) = 0$$

$$\therefore 2\beta + \theta = 90^0$$

$$\therefore \beta = \frac{90^0 - \theta}{2}$$

Scanned by CamScanner

Solution:

$u = 200$ m/s, $\theta = 60^\circ$, height H of building = 100 m.

(i) The maximum height h reached from the top of the building is

$$h = \frac{u^2 \sin^2\theta}{2g} = \frac{200^2 \sin^2 60}{2(9.8)} = 1530.6 \text{ m}$$

Therefore, the maximum height of the missile above the ground is

$$h + H = 1530.6 + 100 = 1630.6 \text{ m.}$$

(ii) The horizontal distance travelled from the foot of the building to point X is obtained using the relation

$$s_x = R = (u\cos\theta)t_t + \frac{1}{2}a_x t_t^2 = (u\cos\theta)t_t$$

where $a_x = 0$ and t_t is the total time of the flight., i.e. the time taken by the missile to move from the top of building to point X on the ground.

When the missile strikes the ground, vertical distance moved is $s_y = -100$ m. Substituting $s_y = -100$ m, $u = 200$ m/s and $\theta = 60^\circ$ into the equation,

$$s_y = (u\sin\theta)t_t + \frac{1}{2}a_y t_t^2,$$

we have

$$-100 = (200)(\sin 60^\circ)t_t - \frac{1}{2}(9.8)t_t^2$$

$$-100 = 173.2t_t - 4.9t_t^2$$

Solving for t_t, we get $t_t \approx 35$ s

Hence, the horizontal distance travelled from the foot of the building to point X is

$$s_x = (u\cos\theta)t_t = (200)(\cos 60^\circ)(35) = 3500 \text{ m}$$

Scanned by CamScanner

2.8 Projectile On An Inclined Plane

When the motion of a projectile is related to an incline plane, it is convenient to take axes parallel and perpendicular to the plane as shown in fig. 2.10.

Let the angle of inclination of the plane to the horizontal be θ, and let the particle be projected from a point O on the plane with speed ***u*** at an angle β to the plane.

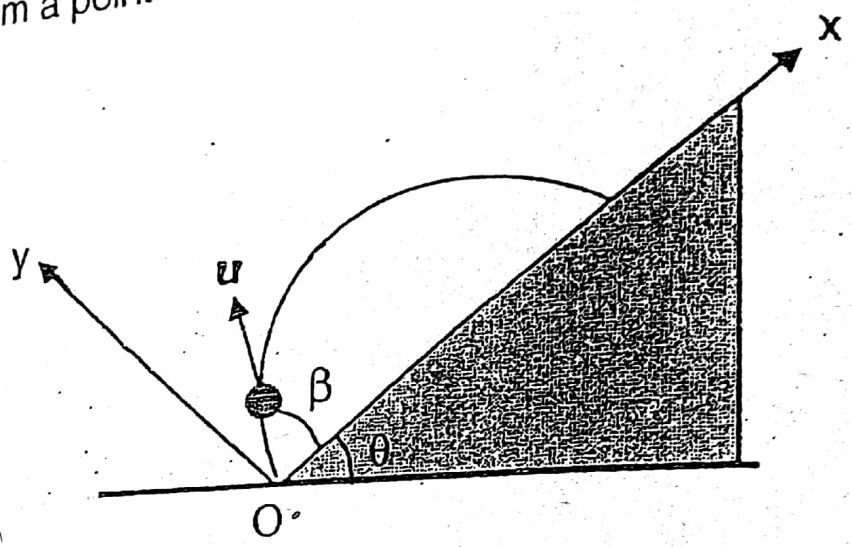

Fig. 2.10

The acceleration due to gravity g makes an angle of $(270^0 - \theta)$ with the x–axis. Hence, component of the acceleration due to gravity along the *x* -- axis is

$$a_x = g \cos(270^0 - \theta) = -g \sin\theta.$$

$$\therefore a_x = -g \sin\theta \qquad (2.13)$$

Component of the acceleration due to gravity along the y – axis is

$$a_y = g \sin(270^0 - \theta) - g \cos\theta$$

$$\therefore a_y = -g \cos\theta \qquad (2.14)$$

The initial velocity **u** is projected at an angle β. Therefore, the x–component of the initial velocity is

$$u_x = u \cos\beta. \qquad (2.15)$$

and the y– component is

$$u_y = u \sin\beta \qquad (2.16)$$

Scanned by CamScanner

Thus, for maximum range, $\beta = \frac{1}{2}(90 - \theta)$. Equation (2.22) then becomes

$$R_{max} = \frac{2u^2}{g\cos^2\theta}\sin\frac{(90^0 - \theta)}{2}\cos\left(\frac{90^0 - \theta}{2} + \theta\right)$$

Rearranging, we have

$$R_{max} = \frac{u^2}{g\cos^2\theta}2\sin\left(\frac{90^0 - \theta}{2}\right)\cos\left(\frac{90^0 - \theta}{2} + \frac{2\theta}{2}\right)$$

$$\therefore R_{max} = \frac{u^2}{g\cos^2\theta}2\sin\left(\frac{90^0 - \theta}{2}\right)\cos\left(\frac{90 + \theta}{2}\right)$$

But we know that

$$\sin y - \sin x = 2\sin\left(\frac{y - x}{2}\right)\cos\left(\frac{y + x}{2}\right).$$

$$\therefore 2\sin\left(\frac{90^0 - \theta}{2}\right)\cos\left(\frac{90^0 + \theta}{2}\right) = \sin 90^0 - \sin\theta$$

$$\therefore R_{max} = \frac{u^2}{g\cos^2\theta}(\sin 90^0 - \sin\theta)$$

$$= \frac{u^2}{g}\left(\frac{1 - \sin\theta}{1 - \sin^2\theta}\right) = \frac{u^2}{g}\frac{(1 - \sin\theta)}{(1 + \sin\theta)(1 - \sin\theta)}$$

$$\therefore R_{max} = \frac{u^2}{g(1 + \sin\theta)}$$

Problems Set 2

1. In the Olympic Games of 1968, the 1600 m relays were won by the United States in 2 min 56.1 s. Find the average speed of the four runners in m/s.

   Answer: 9.1 m/s

2. If a Car averages 90.0 km/h, how long will it take to drive from Takum to Kashimbila, a distance of 56 km? ***Answer:*** *37 min 20 s.*

Scanned by CamScanner

3. In the 1986 Olympic Games, Abdon Pamich of Italy won the 50 km walk, in 4h, 11 min and 11.2 s. Find his average speed in m/s.
   Answer: *v = 3.32 m/s.*

4. The maximum horizontal range of a projectile is 980 m. Find the speed; find the elevation necessary for a range of 490 m.

   Answer: *98 m/s, 15° or 75°*

5. A bullet is fired with speed 735 m/s at elevation 5°.

   (i) Find the horizontal range in metres.
   (ii) If the elevation is changed by 10′, what is the change in range? Give your answers to the nearest 100 m in each case.

   Answer: *(i) 9600 m (ii) 300 m*

6. A projectile has a horizontal range of 3500 m, and its greatest height is 125m. Find its velocity of projection in magnitude and direction.

   Answer: *350 m/s at 8° 8′ to the horizontal*53

7. Find the angle of projection at which the range and the maximum height of a projectile are equal. ***Answer:*** *76°*

8. A particle is projected with speed 49 m/s at an elevation $\tan^{-1}\left(\frac{3}{4}\right)$. Find its greatest height; horizontal range, and time of flight.

   Answer: *44.1 m; 235.2 m; 6 sec*

9. In what proportion will the maximum range of a projectile be increased if the initial velocity is increased by 10%? ***Answer:*** 20%

10. The extreme ranges of a particle up and down a plane are in the ratio 1:3, and their sum is 120 m. Find the inclination of the plane and the speed of projection. ***Answer:*** *30°, 21 m/s.*

11. A body is projected down ward at an angle of 30° with the horizontal from the top of building 170 m high. Its initial speed is 40 m/s. How long will it take before striking the ground? ***Answer:*** 8.16 s

Scanned by CamScanner

12. A projectile is fired with an initial velocity u = 95 m/s at an angle $\theta = 50^{o}$. After 5 s it strikes the top of a hill.

(i) What is the elevation of the hill above the point of firing?

(ii) At what horizontal distance from the gun does the projectile land?

Answer: *(i) 241 m* *(ii) 305 m*

13. A student throws a stone horizontally from the top of a cliff with a speed of 18 m/s. The cliff is 50 m above a flat horizontal beach, as shown in the diagram, below.

(i) How long after being released does the stone strike the beach below the cliff?

(ii) With what speed and angle of impact does it land?

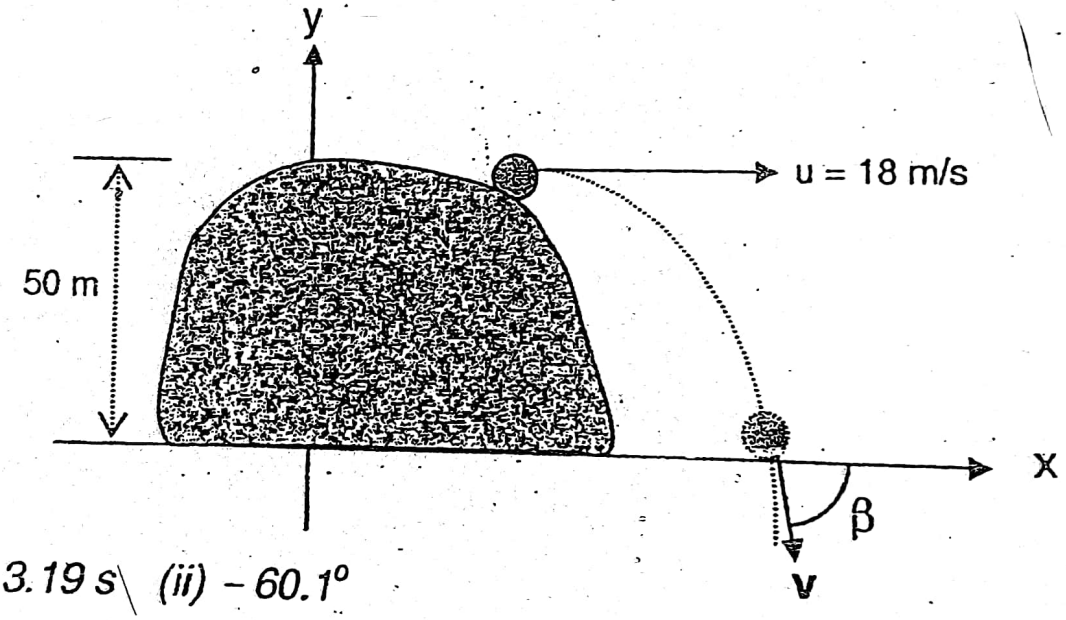

Answer: *(i) 3.19 s* *(ii) – 60.1°*

Scanned by CamScanner

CHAPTER THREE

Newton's Laws of Motion

When force and mass are added to the kinematic equations of motion, the analytical equations derived are referred to as **Dynamics**.

Sir Isaac Newton was the first to systematically introduce these concepts into mechanics and to formulate the fundamental laws governing all motions. These laws are commonly called Newton's Laws of Motion.

Sir Isaac Newton (1642 –1727) was a famous philosopher and a mathematical genius. He stated the law of gravitation and the laws of motion. He discovered that white light is composed of seven colours, and he explained the colour fringe of films. In mathematics he laid the foundation for the calculus

Sir Isaac Newton

3.1 Newton's First Law of Motion

Newton's First Law of Motion is given in Latin in his famous book *Principia Mathematica Philosophiae Naturalis:*

Lex I: *"Corpus omne perseverare in statu suo quiesendi vel movendi uniformiter in directum, nsi quatenus illud a viribus impressis cogitur statum suum mutare".*

Translated: *"Everybody perseveres in its state of rest or of uniform motion in a straight line, except in so far as it is compelled to change that state by impressed forces".*

This law may simply be stated as:

If a body is at rest, it remains at rest or if it is in motion it moves with uniform velocity until it is acted on by an external force.

Scanned by CamScanner

Closely linked with this law is the concept of ***inertia***, which is defined as follows:

Inertia measures the tendency of an object at rest to remain at rest and of an object in motion to remain in motion with its original velocity.

The first law implies that matter has a built-in reluctance to change its state of rest or motion. These effects of inertia are evident when a vehicle suddenly stops, causing the passengers to lurch forward (since they tend to keep moving) or if the vehicle starts, passengers are jerked backwards (since they tend to remain at rest). The mass of an object is a measure of its inertia.

3.2 *Newton's Second Law Of Motion*

Newton's Second Law of Motion as stated in Latin in his *Principia* is:

Lex II: *"Mutationem motus, proportionalem esse vi motrici impressae, et fiere secundum lineam rectam qua vis illa imprimitur"*

Translated this says:

"When a body is acted upon by a constant force, its resulting acceleration is proportional to the force and inversely proportional to the mass".

Symbolically, we can write

$$a \propto \frac{F}{m}$$

$$\therefore F \propto ma$$

$$\therefore F \propto \frac{mv - mu}{t}$$

he momentum of a body is defined as the product of its mass and velocity.

hus

mv = final momentum of the body and
mu = its initial momentum,

Scanned by CamScanner

$\therefore$ mv – mu = its change in momentum.

$$\therefore F \propto \frac{\text{change in momentum}}{t} \qquad (3.1)$$

Thus, we may state the second law as follows:

The rate of change of momentum of a body is proportional to the resultant force and occurs in the direction of the force.

Equation (3.1) can be written in the form

$$F = km\frac{(v-u)}{t} = kma \qquad (3.2)$$

where *k* is a constant of proportionality.

Now, ***One Newton (1 N)*** is defined as the force that gives an acceleration of one meter per second squared (1 m/s^2) to a body with mass of one kilogram (1 kg).

Thus, if F = 1 N and m = 1 kg, a = 1 m/s^2. Substituting these values in equation (3.2), we have

$$F = kma$$
$$1 = k \times 1 \times 1$$
$$\therefore k = 1$$
$$\therefore F = ma \qquad (3.3)$$

We can rewrite equation (3.3) in the form

$$F = \frac{m(v-u)}{t},$$

so that

$$Ft = mv - mu$$
$$\therefore Ft = \text{change of momentum.} \qquad (3.4)$$

Thus, ***if a constant force F acts on an object for some time t, the product Ft is called the impulse of the force.***

Thus, according to equation (3.4),

Impulse = change in momentum

Scanned by CamScanner

3.3 The Difference between Mass And Weight

When a mass *m* is allowed to fall freely, it is the constant downward force of gravity on the mass that gives rise to its constant downward acceleration. This force is simply the weight F_g of the object, and the acceleration **a** is the acceleration due to gravity ***g***.

Thus, for freely falling bodies, the force equation F = ma, is written as F_g = mg.

$$\therefore \textit{Weight } W = mg$$

If g = 9.8 m/s^2, a body of mass 2 kg has a weight ***W*** equal to

$$W = mg = 2(9.8) = 19.6 \text{ N}.$$

The mass *m* of a body is constant but its weight mg varies with position on the Earth's surface, since ***g*** varies from place to place.

3.4 Newton's Third Law

Newton's Third Law, as published in Latin in his *Principia*, is stated as follows:

Lex III: ***"Actioni Contrariam semper et aequalem esse reactionem; sive corporum duorum actions in se mutuo semper esse aequales et in partes contraries dirig".***

Translated this says:

Reaction is always equal and opposite to action; that is to say, the actions of two bodies upon each other are always equal and directly opposite".

One of the forces (either one) is called the ***action force***. The action force is exerted on one body, and that body exerts a reaction force back on the other body. If for example, you pull a string attached to an object with a force F (the action) to the right, the string pulls you with an equal force F (the ***reaction***) to the left. Another example is when a book lies at rest on a table; the weight of the book is the action while the upward force exerted by the table is the reaction. Both are equal but opposite.

Scanned by CamScanner

Example 3.1

A horizontal cable pulls a 200–kg cart along a horizontal track. The tension in the cable is 500 N. Starting from rest,

(i) how long will it take the cart to reach a speed of 8 m/s?

(ii) How far will it have gone?

Solution: $m = 200$ kg, $F = 500$ N.

Since the cart starts from rest, $u = 0$; $v = 8$ m/s.

(i) Now, $F = ma$

$$\therefore a = \frac{F}{m} = \frac{500}{200} = 2.50 \text{ m/s}^2$$

Using $v = u + at$, we have

$$8 = 0 + 2.50\,t$$

$$\therefore t = \frac{8}{2.5} = 3.2 \text{ s.}$$

(ii) $$s = ut + \frac{1}{2}at^2 = 0 + \frac{1}{2}(2.50)(3.2)^2 = 12.8 \text{ m}$$

Example 3.2

A 20 kg crate hangs at the end of a long rope. Find its acceleration when the tension in the rope is

(a) 250 N, (b) 150 N, (c) Zero, (d) 196 N

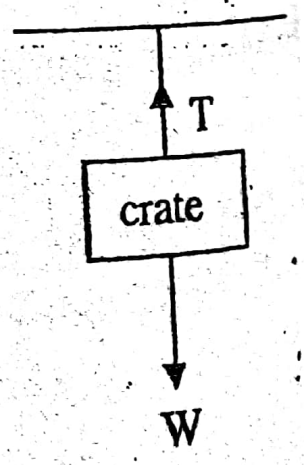

Solution: $m = 20$ kg, Tension $T = 2500$ N

(a) According to Newton's Second Law, the total force F acting on the crate is equal to the mass of the crate multiplied by its acceleration a. Since the motion takes place along the y-axis, we have

$$\Sigma F_y = ma_y$$

$$\therefore T - W = ma_y$$

$$\therefore 250 - 20(9.8) = 20a_y$$

$$\therefore a_y = 2.7 \text{ m/s}^2$$

Scanned by CamScanner

(b) If T = 150:

$$\Sigma F_y = T - W = ma_y$$
$$\therefore 150 - 20(9.8) = 20a_y$$
$$\therefore a_y = -2.3 \text{ m/s}^2$$

(c) If T = 0:

$$\Sigma F_y = T - W = ma_y$$
$$\therefore 0 - 20(9.8) = 20a_y$$
$$\therefore a_y = -9.8 \text{ m/s}^2$$

(d) if T = 196:

$$196 - 20(9.8) = 20\ a_y$$
$$\therefore a_y = 0$$

Example 3.3:

A 1000-kg elevator car is raised and lowered by a cable fastened at the top. Calculate the upward force exerted by the cable when the elevator

(a) starts up with an acceleration of 1.50 m/s^2;
(b) is rising with constant velocity;
(c) starts down with an acceleration of 1.50 m/s^2; and
(d) goes down with constant velocity

Solution:

m = 1000 kg, a_y = 1.50 m/s^2

(a) The total force acting on the elevator = mass x acceleration.

$$\therefore \Sigma F_y = ma_y$$
$$T - mg = ma_y$$
$$T - 1000(9.8) = 1000(1.50)$$
$$\therefore T = 1500 + 9800 = 11300 \text{ N}$$

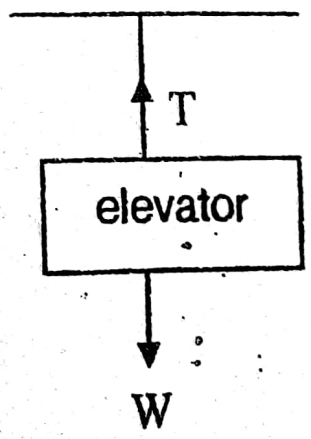

(b) Constant velocity means $a_y = 0$

$$\therefore \Sigma F_y = ma_y = 0$$
$$\therefore T - mg = 0$$
$$T = mg = 1000(9.8) = 9800 \text{ N}$$

Scanned by CamScanner

(c) $a_y = -1.50\ m/s^2$

$$\Sigma F_y = ma_y$$

$$\therefore T - mg = ma_y$$

Substituting, we have

$$T = ma_y + mg = 1000(-1.50) + 1000(9.8) = -1500 + 9800 = 8{,}300\ N$$

(d) Moving down with constant velocity means that the elevator has no acceleration in the downward direction, i.e $a_y = 0$.

$$\therefore \Sigma F_y = T - mg = ma_y = 0$$

$$\therefore T - mg = 0$$

$$\therefore T = mg = 1000(9.8) = 9800\ N$$

Example 3.4:

A 700–N man stands on a scale on the floor of an elevator. The scale records the force it exerts on whatever is on it. What is the scale reading if the elevator has an acceleration of

(a) $1.8\ m/s^2$ up?
(b) $1.8\ m/s^2$ down?
(c) $9.8\ m/s^2$ down?
(d) If this scale is taken to the moon and a 65– kg astronaut weighs himself there, what does the scale read? (Take the acceleration due to free all on the moon to be $1.60\ m/s^2$)

Solution:

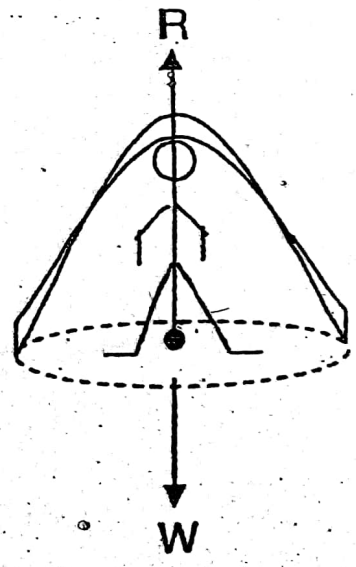

(a) The reaction R is equal to the reading on the scale.

$$a_y = 1.8\ m/s^2,\ W = 700\ N,\ m = \frac{700}{9.8}\ kg = 71.43\ kg$$

By Newton's Second Law, $\Sigma F_y = ma_y$.

$$\therefore R - W = ma_y$$

$$R - 700 = (71.43)(1.8)$$

$$R = 829\ N$$

Scanned by CamScanner

(b) $a_y = -1.8\ m/s^2$

$\Sigma F_y = ma_y$

$R - W = ma_y$

$\therefore R = ma_y + W = (71.43)(-1.8) + 700\ N = 571\ N$

(c) $a_y = -9.8\ m/s^2$

$R = ma_y + W$

$= (71.43)(9.8) + 700 = 0$

(d) Mass on the moon m = 65 kg

Weight on the moon $W_m = mg_m = (65)(1.60) = 104\ N$

By Newton's third's Law,

weight of astronaut = reaction R = Reading on the scale = 104 N

3.5 The Atwood Machine

The Atwood machine is a device often used in the laboratory for determining the acceleration due to gravity. Its schematic diagram is shown in fig. 3.1. It consist of two equal masses fastened to the ends of a long cord which passes over a light weight ball-bearing pulley P. To set the system moving with acceleration a_y, a small mass, called a rider, is added to one side.

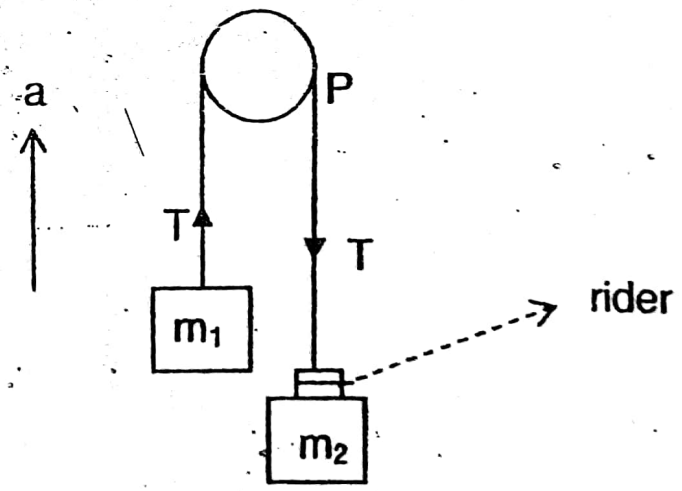

Fig. 3.1

The weight m_1g on the left is opposing the weight m_2g on the right. The resultant force ΣF causing the acceleration is equal to their difference:

$$\Sigma F = m_2g - m_1g \qquad (3.4a)$$

Scanned by CamScanner

The total moving mass is $m_2 + m_1$. Therefore, applying Newton's Second Law,

$$\Sigma F = (m_1 + m_2)a_y \qquad (3.4b)$$

Equating (3.4a) and (3.4b), we have

$$m_2g - m_1g = (m_1 + m_2)a_y$$

$$\therefore\ g = \frac{m_2 + m_1}{m_2 - m_1}a_y \qquad (3.4c)$$

The tension T can be calculated by applying Newton's Second Law on either one of the masses separately. The weight m_1g is acting downward while the tension T is acting upward. Since m_1 is moving upward with acceleration a_y the tension T is greater than m_1g. The resultant force ΣF is therefore

$$\Sigma F = T - m_1g = m_1a_y$$

$$\therefore T = m_1(g + a_y) \qquad (3.5)$$

Example 3.5:

A 6.0– kg mass and a 9.0–kg mass are fastened to the opposite ends of a cord, and the cord hung over a pulley. Neglecting the mass of the cord and pulley, find

(a) The resultant force accelerating the system
(b) The acceleration of the system; and
(c) The tension in the cord.

Solution: $m_1 = 6.0$ kg, $m_2 = 9.0$ kg, $g = 9.8$ m/s^2

(a). The resulting force accelerating the system ΣF is

$$\Sigma F = m_2g - m_1g = 9(9.8) - 6(9.8) = 29.40 \text{ N}$$

(b) The acceleration a of the system is

$$a = \frac{m_2 - m_1}{m_2 + m_1}g = \left(\frac{9-6}{9+6}\right)9.8 = 1.96 \text{ m/s}^2$$

(d) The tension $T = m_1(g + a_y) = 6(9.8 + 1.96) = 70.6$ N

Scanned by CamScanner

3.6 The Law of Conservation of Momentum

Suppose an object A of mass m_1 moving with initial velocity u_1 collides with another object B of mass m_2 moving with initial velocity u_2, both moving in the same direction, fig. 3.2.

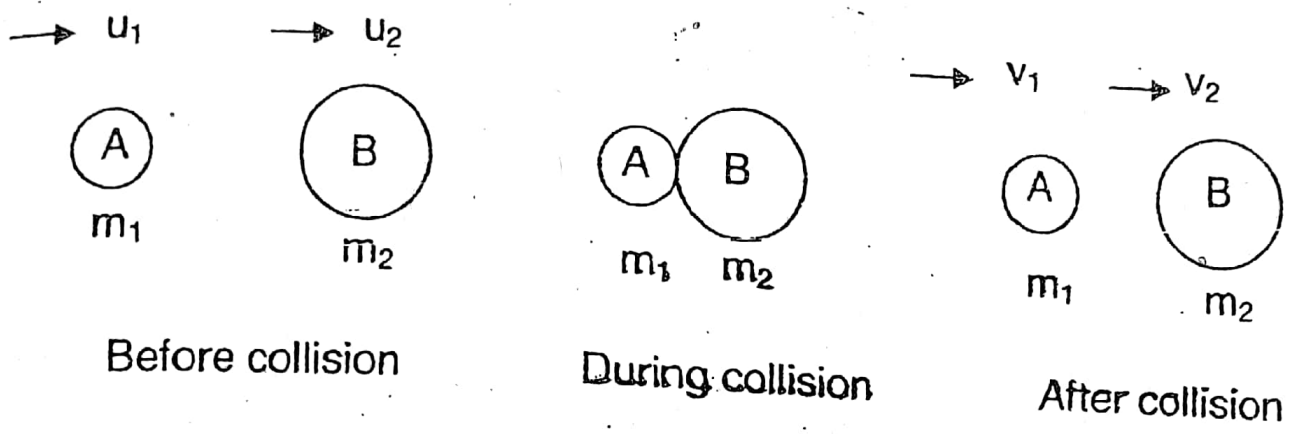

Fig. 3.2

If A exerts a force F to the right on B for time t, then by Newton's third Law, B will exert an equal but opposite force F on A, also for time t.. This implies that both A and B receive equal but opposite impulses Ft. So their changes of momentum must be equal and opposite:

total change in momentum of A = – total change in momentum of B.

$$\therefore m_1v_1 - m_1u_1 = -(m_2v_2 - m_2u_2)$$

Rearranging, we have

$$m_1u_1 + m_2u_2 = m_1v_1 + m_2v_2$$

That is,

The total momentum before collision = total momentum after collision.

This result is known as the *Principle of Conservation of Linear momentum.* The principle states that:

When no external force acts on a system of colliding objects, the total momentum before collision is equal to the total momentum after collision.

Scanned by CamScanner

Example 3.6:

A ball with a mass of 5.0 kg moving with a velocity of 20.0 m/s collides with another ball with a mass of 10.0 kg moving in the same direction along the same line with a velocity of 10.0 m/s. After impact, the first mass is still moving in the same direction but with a velocity of 8.0 m/s. Calculate the velocity of the second mass after impact.

Solution:

$m_1 = 5.0$ kg, $u_1 = 20.0$ m/s, $m_2 = 10.0$ kg, $u_2 = 10.0$ m/s, $v_1 = 8.0$ m/s, $v_2 = ?$

From the principle of conservation of momentum,

$$m_1u_1 + m_2u_2 = m_1v_1 + m_2v_2$$
$$\therefore (5.0)(20.0) + (10.0)(10.0) = (5.0)(8) + 10v_2$$
$$100 + 100 = 40 + 10v_2$$
$$200 = 40 + 10v_2$$
$$\therefore v_2 = 16.0 \text{ m/s}$$

Example 3.7:

A golfer hits a golf ball of mass 51 g and the ball leaves the club with a velocity of 80 m/s. If the ball and the club are in contact for 0.006 s, find the ball's final momentum and the average force exerted by the club on the ball.

Solution:

$m = 51$ g $= 0.051$ kg, $u = 0$, $v = 80$ m/s, $t = 0.006$ s.

Initial momentum $= mu = (0.051 \text{ kg})(0) = 0$

Final momentum $= mv = (0.051)(80) = 4.08$ kg·m/s.

Since the impulse is equal to change in momentum, we have

$$Ft = mv - mu$$

$$\therefore F(0.006) = 4.08 - 0 = 4.08 \text{ kg.m/s.}$$

$$F = \frac{4.08}{0.006} = 680 \text{ N}$$

Scanned by CamScanner

Problem Set 3

1. A 900–kg car is moving at 20 m/s along a level road. How large a constant retarding force is required to stop it in a distance of 30 m?

   Answer: F = – 6000 N

2. A boy having a mass of 75 kg holds in his hands a bag of flour weighing 40 N. With what force does the floor push up on his feet?

   Answer: F = 775 N

3. A 15.0–kg load of bricks hangs from one end of a rope that passes over a small, frictionless pulley. A 28.0 kg counterweight is suspended from the other end of the rope (fig. 3.3). The system is released from rest.

   (a) What is the magnitude of the upward acceleration of the load of bricks?

   (b) What is the tension of the rope while the load is moving?

   Answer: (a) 2.96 m/s^2 (b) 191N.

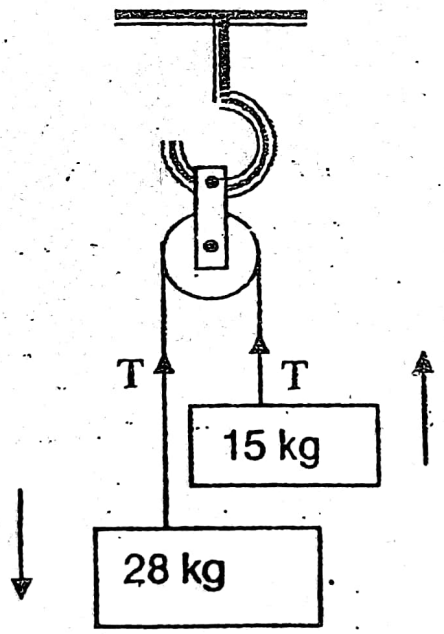

Fig. 3.3

4. A railway truck A of mass 2 x 10^4 kg traveling at 0.5 m/s collides with another truck B of half its mass moving in the opposite direction with a velocity of 0.4 m/s. If the trucks couple automatically on collision, find the common velocity with which they move.

   Answer: 0.2 m/s

Scanned by CamScanner

5. A force of 70 N gives an object of unknown mass an acceleration of 6.10 m/s^2. What is the object's mass?

Solution:

$F = 70\ N,\ a = 6.10\ m/s^2$.

Using $F = ma$, we have

$$m = \frac{F}{a} = \frac{70N}{6.10 m/s^2} = 11.5\ kg$$

6. An 1100-kg car travels on a straight highway with a speed of 30 m/s. The driver sees a red light ahead and applies her brakes, which exert a constant braking force of 4 kN.

(a) What is the deceleration of the car?
(b) In how many seconds will the car stop?

Solution:

$m = 1100\ kg,\ u = 30\ m/s,\ F = 4\ 000\ N$.

Using $F = ma$, we have

(a) $$a = \frac{F}{m} = \frac{4000\ N}{1100} = -3.64\ m/s^2$$

(b) When the car stops, $v = 0$.

Using $v = u + at$, we have

$$t = \frac{v-u}{a} = \frac{0-30}{(-3.64)} = 8.24\ s$$

7. A constant force accelerates an electron ($m = 9.1 \times 10^{-31}$ kg) from rest to a speed of 5×10^7 m/s in a distance of 0.80 cm. (i) Determine this force. (ii) How many times larger than mg is it?

Answer. (i) $F = 1.43 \times 10^{-3} N$ (ii) $\frac{F}{mg} = 1.6 \times 10^{16}$

Scanned by CamScanner

8. A bullet of mass 12.0 g is accelerated from rest to a speed of 700 m/s as travels 20 cm in a gun barrel. Assuming the acceleration to be constant how large was the accelerating force?

Solution:

Mass of bullet $m = 12.0 \times 10^{-3}$ kg,

Initial velocity of bullet $u = 0$,

Final velocity of bullet $v = 700$ m/s,

Distance traveled by bullet $s = 20$ cm $= 20 \times 10^{-2}$ m

Accelerating force $F = ?$

Using the third equation of motion we obtain the acceleration a:

$$v^2 = u^2 + 2as$$

$$\therefore a = \frac{v^2 - u^2}{2s} = \frac{700^2 - 0}{2(20.0 \times 10^{-2})} = 1225000 \text{ m/s}^2$$

$$\therefore F = ma = 12.0 \times 10^{-3} \times 1225000 = 14700 \text{ N}$$

9. A rifle bullet with a mass of 12 g, traveling with a speed of 400 m/s, strikes a large wooden block, which it penetrates to a depth of 16 cm. Determine the magnitude of the frictional force (assumed constant) that acts on the bullet.

Answer: 6000 N

Scanned by CamScanner

CHAPTER FOUR

STATICS

When an object is at rest and remains at rest, we say that the object is in ***static equilibrium***. The branch of physics which deals with the equilibrium of forces is called ***Statics.***

4.1 Forces Acting at a Point

When several forces of various magnitudes and directions act upon a body, they are said to constitute a system of forces. The various methods of solution of finding the conditions that a system must satisfy in order to have equilibrium are based on several axioms called the ***Principles of Statics.***

Axiom I: The parallelogram Law

This law states that,

If two forces, P and Q, acting at a point are represented both in magnitude and direction by the sides of a parallelogram drawn from the point, their resultant R is represented in magnitude and direction by the diagonal of the parallelogram drawn from that point.

Fig. 4.1

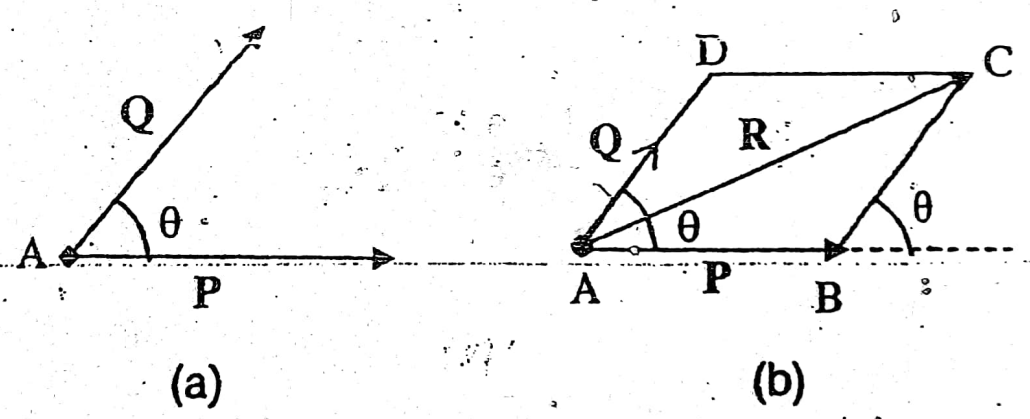

In fig. 4.1a, two forces **P** and **Q** act at point A. The angle between them is θ. In fig. 4.1b, the length AB represents the force **P** while the length AD represents the force **Q**. The parallelogram is completed and the diagonal CA, which represents the resultant **R** of **P** and **Q**, is drawn.

Scanned by CamScanner

According to the parallelogram law, the three sides of triangle ABC, the sides AB, BC and CA, represent the three forces **P**, **Q** and **R**, both in magnitude and direction respectively and are in equilibrium at point A. From this we have the statement of the **triangle of forces**:

Axiom II:

The Triangle of forces:

If three forces are in equilibrium they can be represented in magnitude and direction by the three sides of a triangle taken in order.

The converse theorem is also true; namely that if three forces acting at a point are in equilibrium, and a triangle is drawn with its sides parallel to the direction of the forces, then the lengths of the sides of the triangle will be proportional to the sizes of the corresponding forces. Thus from triangle ABC in fig. 4.1b;

$$\frac{P}{AB} = \frac{Q}{BC} = \frac{R}{AC}.$$

Using the **sine formula**, we have

$$\frac{P}{\sin C} = \frac{Q}{\sin A} = \frac{R}{\sin B}$$

In general, if the three forces in fig. 4.2 are in equilibrium, then

$$\frac{F_1}{\sin\theta_1} = \frac{F_2}{\sin\theta_2} = \frac{F_3}{\sin\theta_3}$$

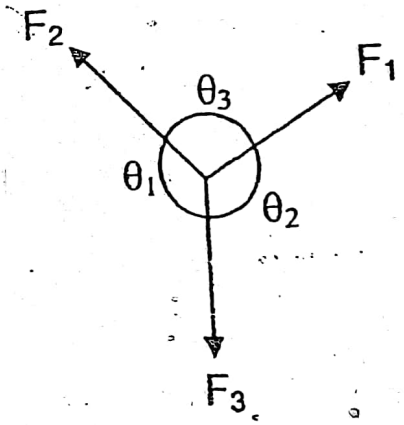

Fig. 4.2

This statement is equivalent to **Lami's Theorem:**

Axiom III: ***Lami's Theorem:***

Lami's Theorem states that,

If three forces acting at a point are in equilibrium then each force is proportional to the sine of the angle between the other two forces.

Scanned by CamScanner

Example 4.1:

A mass of 12 kg is hung by two strings of lengths 3 m and 4 m, the other ends of the strings being attached to points in a horizontal line 5 m apart. Calculate the tension in each string.

Solution:

First, we calculate γ by applying the cosine rule to triangle ABC in fig. 4.3a:

$$5^2 = 3^2 + 4^2 - 2(3)(4)\cos\gamma$$
$$25 = 9 + 16 - 24\cos\gamma$$
$$\cos\gamma = 0$$
$$\therefore \gamma = 90^\circ$$

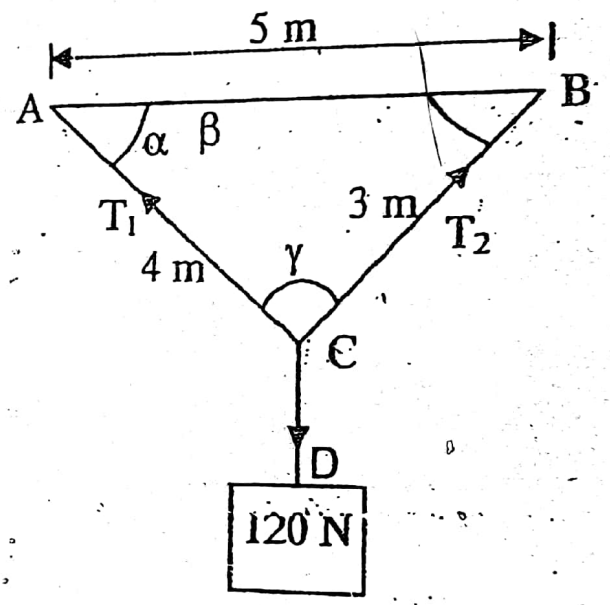

Fig. 4.3a

Since γ is 90°, triangle ABC is a right-angled triangle. Hence,

$$\therefore \cos\alpha = \frac{4}{5}$$

$$\cos\beta = \frac{18}{30} = \frac{3}{5}$$

Using Lami's Theorem, we have

$$\frac{T_1}{\text{Sin DCB}} = \frac{T_2}{\text{Sin DCA}} = \frac{120}{\text{Sin ACB}} \qquad \text{(i)}$$

Scanned by CamScanner

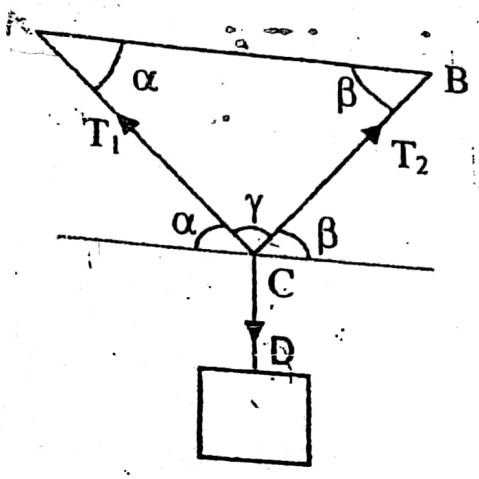

Fig. 4. 3b

By drawing a horizontal dotted line through point C, fig. 4.3b, we find that

$\therefore$ angle DCB = $90^o + \beta$, angle DCA = $90^o + \alpha$.

Hence, equation (i) becomes

$$\frac{T_1}{\text{Sin}(90^0+\beta)} = \frac{T_2}{\text{Sin}(90^0+\alpha)} = \frac{120}{\text{Sin}\,90^0}, \qquad \text{(ii)}$$

Using Sin (A + B) = Sin A cos B + cos A Sin B, we have

$$\text{Sin}(90^o+\beta) = \text{Sin}\,90^o \cos\beta + \cos 90^o \,\text{Sin}\,\beta = \cos\beta$$

Similarly, Sin $(90^0 + \alpha) = \cos\alpha$.

Using these identities, equation (ii) becomes

$$\frac{T_1}{\text{Cos}\beta} = \frac{T_2}{\text{Cos}\,\alpha} = \frac{120}{\text{Sin}\,90^o}$$

But $\cos\beta = \frac{3}{5}$ and $\cos\alpha = \frac{4}{5}$.

$$\therefore \frac{T_1}{3/5} = \frac{120}{1} \qquad \therefore T_1 = \frac{3}{5} \times 120 = 96\text{N}$$

Also,

$$\frac{T_2}{4/5} = \frac{120}{1}. \qquad \therefore T_2 = 4/5 \times 120 = 72\text{ N}$$

Scanned by CamScanner

Example 4.2:

Find the magnitude and direction of the resultant of two forces of 7N and 8N, which act at an angle of 40°.

Fig. 4.4

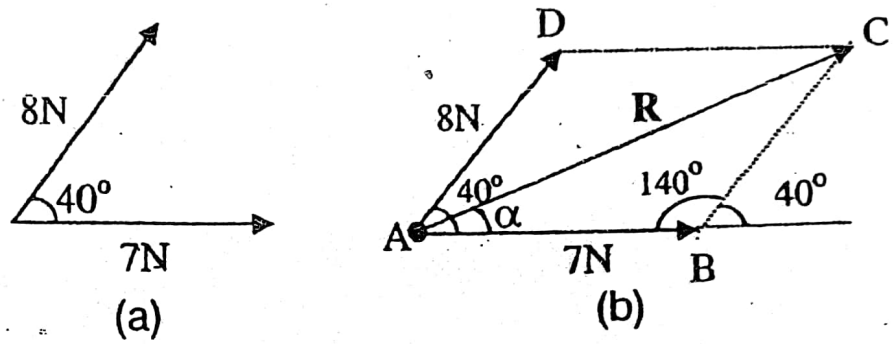

Solution:

If we complete the parallelogram we get fig. 4.4b. Using the cosine rule we compute R:

$$R^2 = 7^2 + 8^2 - 2(7)(8)\cos 140°$$

$$\therefore R = 14.1 \text{ N.}$$

The angle α, which gives the direction of R with respect to the 7–N force, is obtained using the sine Rule:

$$\frac{8}{\text{Sin}\alpha} = \frac{14.1}{\text{Sin}140°}$$

$$\therefore \text{Sin}\,\alpha = \frac{8\,\text{Sin}\,40°}{14.1} = 0.3648$$

$$\therefore \alpha = \sin^{-1}(0.3648) = 21°24'.$$

Example 4.3

As shown in fig. 4.5, the tension in the horizontal cord is 30 N. Find the weight of the object W and the tension T_1.

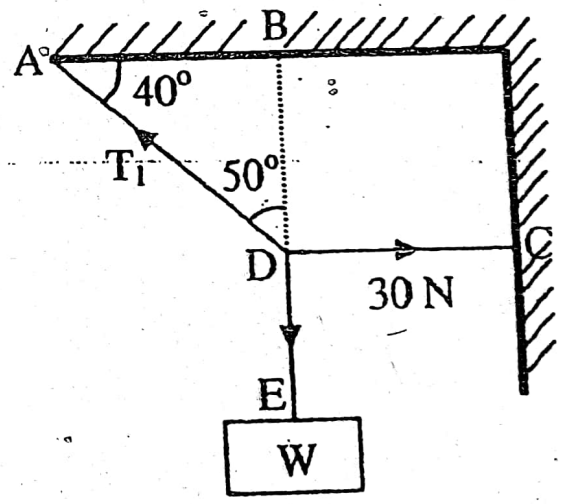

Fig. 4.5

Scanned by CamScanner

Solution:

Applying Lami's Theorem, we have

$$\frac{T_1}{\text{Sin CDE}} = \frac{30}{\text{Sin ADE}} = \frac{W}{\text{Sin ADC}}$$

Angle CDE = 90°, angle ADE = 180° – 50° = 130°,

angle ADC = 50° + 90° = 140°

$$\therefore \frac{T_1}{\text{Sin } 90^\circ} = \frac{30}{\text{Sin } 130^\circ} = \frac{W}{\text{Sin } 140^\circ}$$

$$\therefore T_1 = \frac{30\text{N}}{\text{Sin}130^\circ} = 39.2\text{ N}$$

Also,

$$\frac{30\text{N}}{\text{Sin } 130^\circ} = \frac{W}{\text{Sin } 140^\circ}$$

$$\therefore W = \frac{30\text{Sin } 140^\circ}{\text{Sin } 130^\circ} = 25.2\text{ N}$$

4.2 Parallel Forces

In Section 4.1, we considered forces whose lines of action are not parallel and are acting at a point. In this Section, we shall consider parallel forces. We shall assume that the bodies on which the forces act are rigid, i.e. the shape of the body is unaltered by the forces acting on it.

4.2.1 The Moments of Forces

Forces can produce turning effects. When a door is opened the force on the handle exerts a turning-effect about the hinges. A screwdriver is operated by means of a turning-effect. This turning effect of a force is called its ***moment***.

The product of the force and the perpendicular distance from the line of action of the force to the point measures the **moment of the force** or ***torque*** about that point.

Scanned by CamScanner

Thus, in fig. 4.6, the moment of **F** about O is given by

Moment = **F** x **AO**

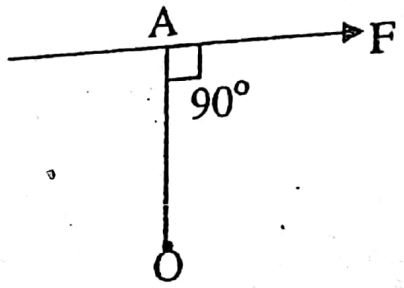

Fig. 4.6

4.2.2 Principles of Moments

In Fig. 4.7, a uniform rod of length $l = d_1 + d_2$ is balanced at the support A by two forces F_1 and F_2. The reaction at the support is R.

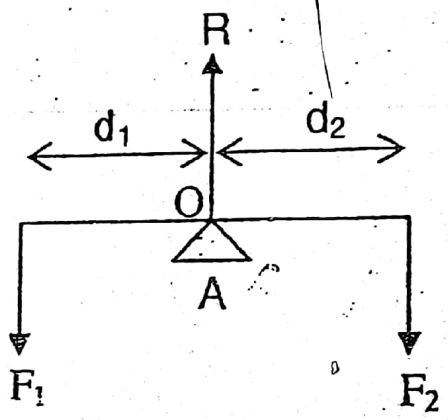

Fig. 4.7

The force F_1 tends to turn the rod in the anticlockwise direction. The moment of this force is, therefore, called ***anticlockwise moment*** (ACWM) and is given by

$$ACWM = F_1 \times d_1.$$

The force F_2 tends to turn the rod in the clockwise direction. The moment of this force in this case is called ***clockwise moment*** (CWM) and is given by

$$CWM = F_2 \times d_2$$

For the system to be in equilibrium, the clockwise moment must be equal to the anticlockwise moment.

Scanned by CamScanner

Similarly, if the pivoted rod is in equilibrium under the action of several forces, ***the total anticlockwise moments of all the forces about the pivot is equal to the total clockwise moments of all the forces about the pivot.***

Thus, if the rod in fig. 4.8 is balanced horizontally by the forces F_1, R, W, S and F_2, then, taking moments about A for each force, we have

$$\Sigma \text{cwm} = \Sigma \text{acwm}$$

$$\therefore F_2 (d_2 + d_3 + d_4) + Wd_2 = S(d_2 + d_3) + F_1 d_1$$

Fig. 4.8

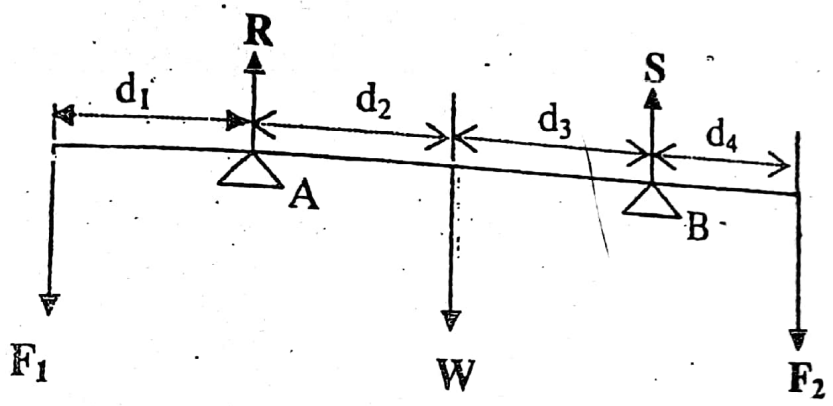

In addition, when an object is in equilibrium under the action of parallel forces, ***the Sum of the Forces in one direction = Sum of the Forces in the opposite direction.***

Thus, from fig. 4.8,

$$F_1 + W + F_2 = R + S$$

We can summarize the conditions for an object to be in equilibrium under the action of parallel forces by the following Axioms:

Axiom IV: ***The sum of the forces in one direction equals the sum of the forces in the opposite direction.***

Axiom V: ***The sum of the clockwise moments about any point equals the sum of the anticlockwise moments about that point.***

Axioms IV and V are called the **Principles of Moments.**

Scanned by CamScanner

Example 4.4:

A uniform beam of length 4m weighs 200N and holds a 450-N weight as shown below. Find the magnitude of the forces exerted on the beam by the two supports at its ends.

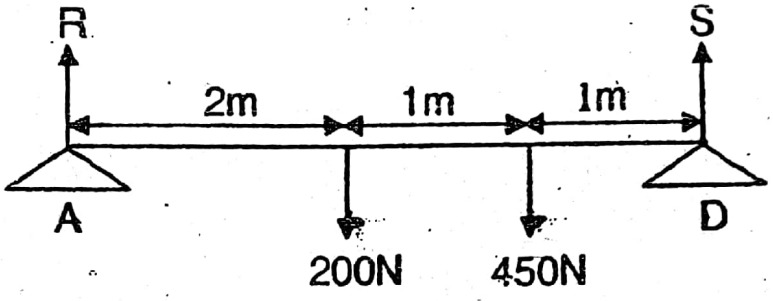

Fig. 4.9

Solution:

Applying the first Principles of Moments, we have

$$R + S = 200 + 450 = 650 \qquad \text{(i)}$$

Taking moments about A in fig. 4.9, we have

$$\Sigma CWM = \Sigma ACWM$$

$$(200 \times 2) + (450 \times 3) = S \times 4$$

$$400 + 1350 = 4S$$

$$\therefore S = \frac{1750}{4} = 437.5 \text{ N}$$

From equation (i), R = 650 – S = 650 – 437.5 = 212.5N.

Example 4.5:

A uniform 40 kg plank has a length of 6 m and is supported symmetrically on two trestles 4 m apart. Calculate:

(i) the maximum weight of a man who can walk along the whole length of the plank without causing the plank to overbalance and;

(ii) the reaction at each trestle when the man stands immediately above one of the trestles.

Scanned by CamScanner

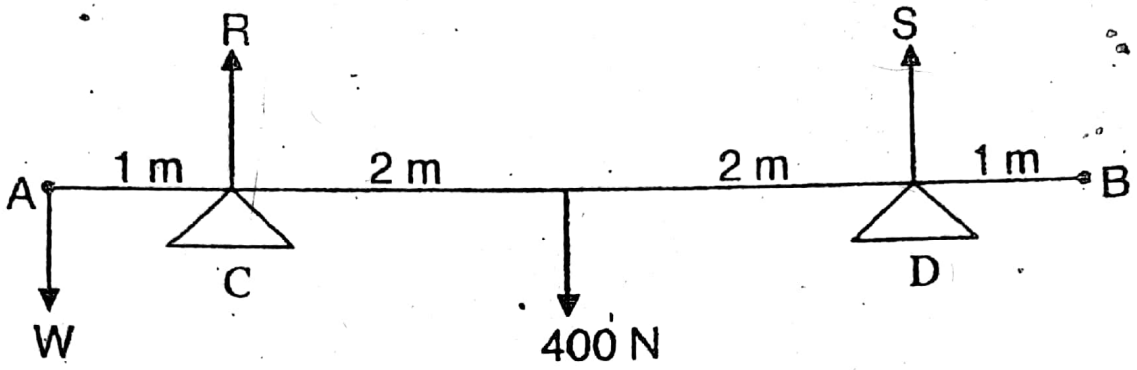

Fig. 4.10

Solution:

(i) Mass of plank = 40kg ∴Weight of plank = 400N
Let the weight of the man be W.

The worst case will happen when the man is at A or B, fig. 4.8. At A, the man will lift the plank just clear of the trestle at D. In this case S = 0

Applying the principles of moments, we have

$$R + S = W + 400$$
$$\therefore R = W + 400 \qquad \text{(i)}$$

Taking moment about the support D we have

$$\sum CWM = \sum ACWM$$
$$\therefore R \times 4 = (W \times 5) + 400 \times 2)$$
$$\therefore 4R = 5W + 800 \qquad \text{(ii)}$$

Substituting R from equation (i) into equation (ii), we have

$$4(W + 400) = 5W + 800$$
$$4W + 1600 = 5W + 800$$
$$\therefore W = 800N$$

(ii) If the man stands immediately above the trestle C, Fig. 4.8, we have

$$R + S = W + 400 = 800 + 400.$$
$$R + S = 1200 \qquad \text{(iii)}$$

Scanned by CamScanner

Taking moments about the trestle C, we have

$$400 \times 2 = S \times 4$$
$$800 = 4S \quad \Rightarrow S = 200$$

From (iii), $R = 1200 - S = 1200 - 200 = 1000N$.

4.3 Friction

When an effort is made to slide one object over another, the resistive force opposing the motion is called ***Friction.***

Friction can be a serious practical problem, but in other cases its presence is essential. For example, it is the frictional push of the ground on the soles of our shoes that enables us to walk. Without friction, our feet would slip backwards as they do when we try to walk on a slippery road. In industry, however friction is a great nuisance. It wastes energy in machinery and causes wear.

4.3.1 Coefficient of Static Friction

Consider an object of mass m that is at rest on a flat tabletop. Suppose that you apply a horizontal force *F* to the object in an effort to slide it along the tabletop, (fig. 4.11).

If the applied force *F* is too small, the object does not move i.e. it remains static. This means that there must be a horizontal force acting on the object, a force that opposes the applied force. This force that is exerted on the object by the tabletop is called ***static friction*** F_s. It is exactly equal but opposite to the applied force, and it vanishes when you stop pushing the object. If the applied force is increased gradually, at some point, the object will finally "break loose" and start to slide.

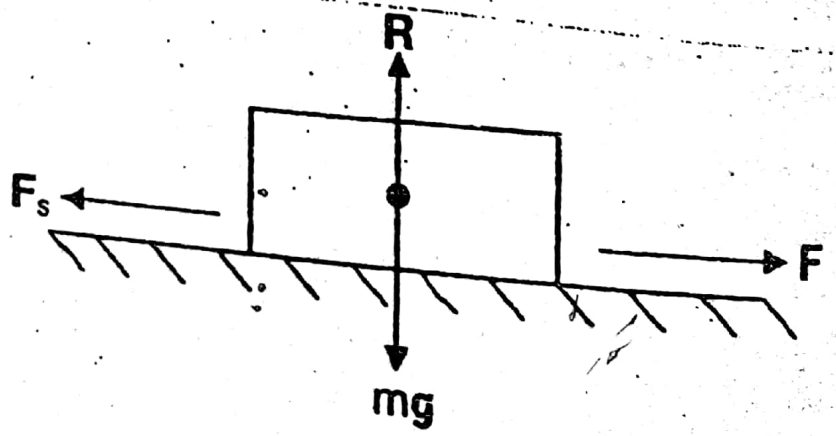

Fig. 4.11

Scanned by CamScanner

The maximum applied force that is required to just start the object sliding is called ***Limiting Frictional Force***. Experimental evidence shows that the *limiting frictional force* F_l is proportional to the weight of the object. The weight of the object is equal to the normal reaction R, by Newton's Third Law. Thus,

$$F_l \propto R$$
$$\therefore F_l = \mu_s R$$

where the proportionality constant μ_s is called the ***Coefficient of Static Friction.***

During the sliding motion, a frictional force is still opposing the motion. This is because if you stop pushing, the object will gradually come to rest.

The frictional force acting on moving object is called ***Kinetic or Dynamic Friction*** F_d. The dynamic friction is independent of the area of contact and is directly proportional to the normal Reaction *R*.

$$F_d \propto R$$
$$\therefore F_d = \mu_d R$$

where μ_d is called the ***Coefficient of Dynamic Friction.***

Example 4.6

A wooden crate of mass 100 kg is at rest on a flat wooden floor. An effort is made to start the crate sliding by pulling on a rope that makes an angle of 30° with the horizontal, as shown in fig. 4.12. If the coefficient of static friction between the crate and the floor is 0.4,

(i) What is the minimum rope tension that will start a sliding motion?

(ii) If the crate is pulled along at a constant speed v and the force required to maintain this motion is F = 330 N, applied at 30° to the horizontal, what is the value of the coefficient of sliding friction at the speed v?

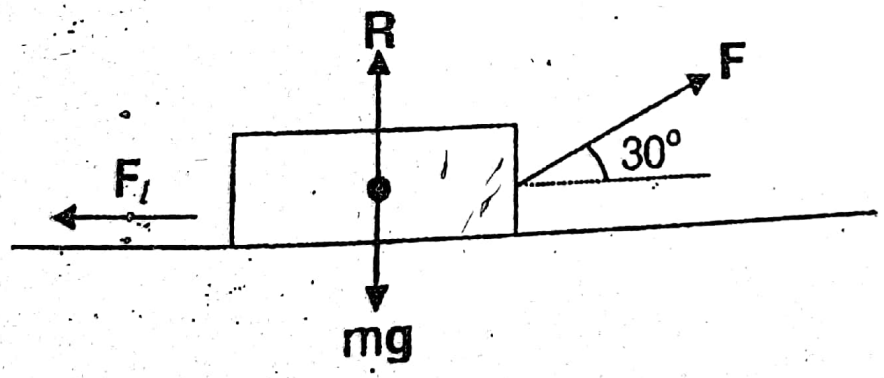

Fig. 4.12

Scanned by CamScanner

Solution:

(i) Mass of crate m = 100kg, applied effort F = minimum tension; the direction of the applied force $\theta = 30^o$.

Vertical component of $F = F_y = F \sin 30^o = 0.5F$.
Horizontal component of $F = F_x = F\cos 30^o = 0.866\ F$

Applying Newton's Second Law in the vertical direction with $a_y = 0$, we have

$$\Sigma F_y = ma_y$$

$$\therefore R + F \sin 30^o - mg = 0$$
$$\therefore R + 0.5F - 100\ (9.8) = 0$$
$$R = 980 - 0.5F \qquad \text{(i)}$$

Just before the crate begins to slide, the horizontal component of the applied effort balances the limiting frictional force $F_l = \mu_s R$.

$$\therefore \mu_s R = F \cos 30^0 = 0.866F$$
$$\therefore \mu_s R = 0.866F \qquad \text{(ii)}$$

Eliminating R between equation (i) and (ii), we have

$$0.4\ (980 - 0.5F) = 0.866\ F$$

Solving for F, we get $F = 368\ N$.

(ii) If the crate is pulled at constant speed v horizontally, there is no acceleration in the horizontal direction and so $a_x = 0$. By Newton's second Law,

$$\Sigma F_x = ma_x$$
$$\therefore F \cos 30^0 - \mu_d R = 100 \times 0 = 0$$
$$0.866F - \mu_d R = 0$$

$$\therefore \mu_d = \frac{0.866F}{R}$$

Substituting for R from equation (i), we have

$$\mu_d = \frac{0.866F}{980 - 0.5F} = \frac{(0.866)(368)}{980 - (0.5)(368)} = 0.351$$

Scanned by CamScanner

4.4 The Inclined Plane

The coefficient of limiting friction or static friction μ_s can be found by first placing a block of material on a plane surface. The surface is then tilted to the angle θ at which the block is just about to slip, Fig. 4.13.

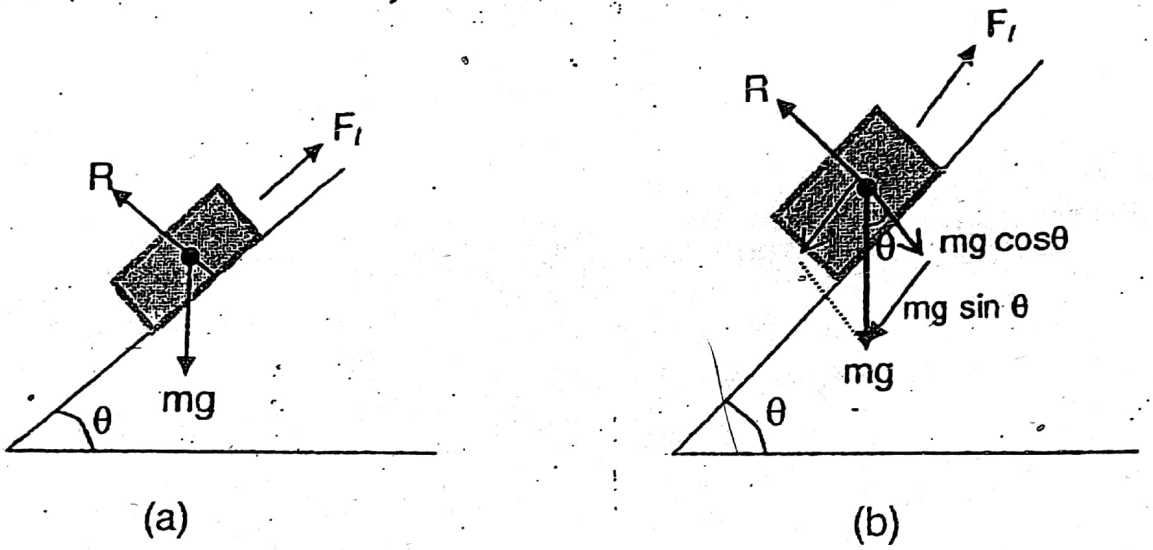

Fig. 4.13

The forces acting on the block are the weight mg, the normal reaction **R** of the surface and the limiting frictional force F_l, which prevents the block from slipping. These forces are in equilibrium. We can resolve the weight mg into two components; mgsinθ along the surface and mgcosθ perpendicular to the surface, see fig. 4.13b.

At equilibrium, the sum of the forces along the surface equals zero. Hence,

$$F_l - mg\sin\theta = 0$$

But $F_l = \mu_s R$.

$$\therefore \mu_s R = mg\sin\theta \qquad \text{(i)}$$

Also for equilibrium, the sum of the forces perpendicular to the surface equals zero. Hence,

$$R - mg\cos\theta = 0$$

$$\therefore R = mg\cos\theta \qquad \text{(ii)}$$

Scanned by CamScanner

Dividing equation (i) by (ii), we get:

$$\mu_s = \tan\theta$$

Hence μ_s can be found by measuring θ, the angle of friction.

Example 4.7

An 80–kg box is released on a 30° incline and accelerates down the incline at 0.03 m/s². Find the frictional force impeding its motion. How large is the coefficient of friction in this situation?

Solution:

$m = 8.0$ kg, $\theta = 30°$, $a = 0.30$ m/s².

Let F_d be the dynamic friction impeding the motion and μ_d the coefficient of dynamic friction.

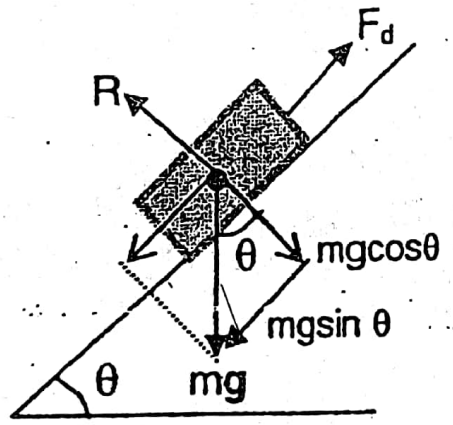

Fig. 4.14

The sum of the forces parallel to the plane is equal to the mass of the box times the acceleration parallel to the plane. Hence, from fig. 4.14,

$$\Sigma F_{\parallel} = mg\sin\theta - F_d = ma_{\parallel}$$

$$\therefore F_d - mg\sin\theta - ma_{\parallel} = 8.0\,(9.8)\,(0.5) - 80(0.3) = 36.8\text{ N}$$

From fig. 4.14,

$$R = mg\cos\theta = (8.0)(9.8)(\cos 30°) = 67.9\text{N}$$

Using $F_d = \mu_d R$, we have

$$\therefore \mu_d = \frac{F_d}{R} = \frac{36.8}{67.9} = 0.54$$

Scanned by CamScanner

Example 4.8

What is the smallest force parallel to a 37° incline needed to keep a 100–N weight from sliding down the incline, if the coefficient of static friction is 0.30?

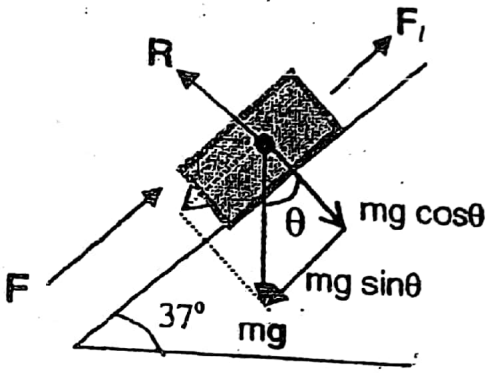

Fig. 4.15

Solution:

$W = 100N$, $\theta = 37^o$, $\mu_s = 0.3$

We choose the x–axis along the incline, and the y–axis perpendicular to the incline, see fig. 4.15.

If F is the minimum force parallel to the incline needed to keep the weight from sliding, then applying Newton second law, we have for the x-direction,

$$\sum F_x = ma_x$$
$$\therefore F - mg\sin\theta + F_l = m\,a_x = 0,$$
$$\therefore F = mg\sin\theta - F_l \qquad \text{(i)}$$

For the y-direction, we have

$$\Sigma F_y = ma_y$$
$$\therefore R - mg\cos\theta = ma_y = 0, \qquad \text{since } a_y = 0.$$
$$\therefore R = mg\cos\theta$$
$$\therefore F_l = \mu_s R = \mu_s mg\cos\theta$$

Using $F_l = \mu_s mg\cos\theta$, in equation (i) above, we have

$$F = mg\sin\theta - \mu_s mg\cos\theta$$
$$= 100\sin 37 - 0.3(100\cos 37^o) = 36\text{ N}$$

Hence, 36 N is the minimum force needed along the incline.

Scanned by CamScanner

Example 4.9

A ladder leans against a smooth wall, as shown fig. 4.16. (By a "smooth" wall, we mean that the wall exerts on the ladder only a force that is perpendicular to the wall. There is no friction force). The ladder weighs 200 N and its center of gravity is 0.4L from the base, where L is the ladder's length.

(a) How large a friction force must exist at the base of the ladder, if it is not to slip?

(b) What is the necessary coefficient of static friction?

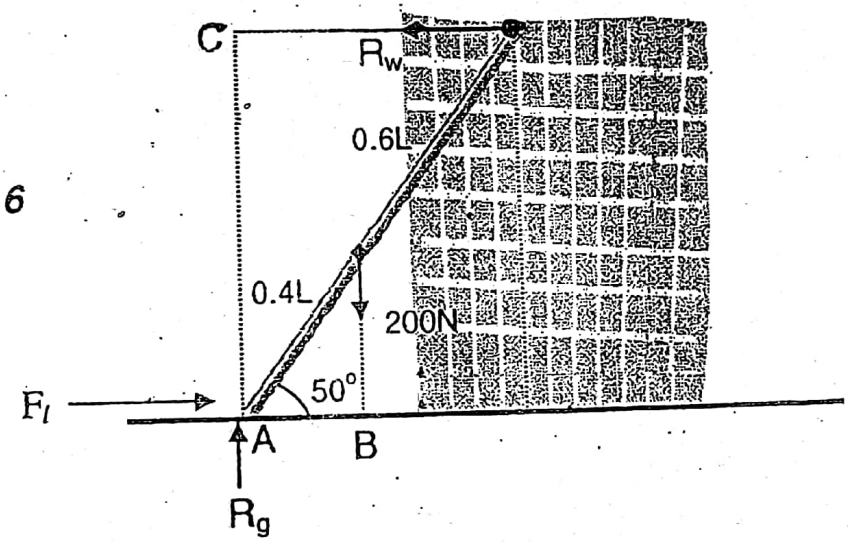

Fig. 4.16

Solution:

(a) Weight of ladder = 200 N,

Ladder's center of gravity is 0.4L from the end A, where L = length of ladder.

Let the reaction of the wall on the ladder be R_w,
the reaction of the ground on the ladder be R_g,
and the limiting frictional force preventing the ladder from slipping be F_l.

From the principles of moments, the sum of the forces in one direction is equal to the sum of the forces in the opposite direction.

Hence, for the x–direction, we have

$$R_w = F_l, \qquad \text{(i)}$$

and for the y–direction, we have

$$R_g = 200 \text{ N} \qquad \text{(ii)}$$

Scanned by CamScanner

Taking moments about point A (fig. 4.16) we have, from the principles of moments,

the sum of clockwise moments = the sum of anticlockwise moment:

$$\therefore 200 \times AB = R_w \times AC \qquad \text{(iii)}$$

But $AB = 0.4L\cos 50°$ and $AC = L\sin 50°$

Equation (iii) then becomes

$$200(0.4L\cos 50°) = R_w L\sin 50°$$

$$\therefore R_w = 67 \text{ N}$$

From equation (i), the frictional force $F_l = R_w = 67$ N.

(b) Since $F_l = 67$ N, and $R_g = 200$ N, we have

$$F_l = \mu_s R_g.$$

$$\therefore 67 \text{ N} = \mu_s\, 200$$

$$\therefore \mu_s = \frac{67}{200} = 0.34$$

Example 4.9

The tension in cord A in fig. 4.17a is 30 N. Find the tension in B and the value of W.

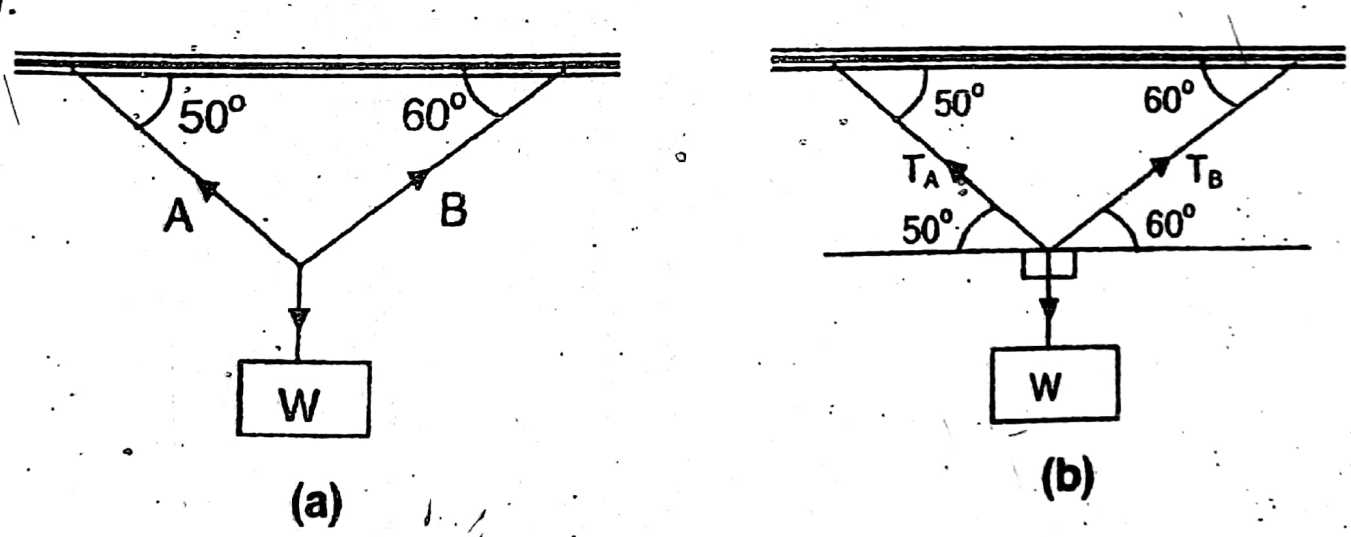

Fig. 4.17

Scanned by CamScanner

Solution:

The tension in cord A is $T_A = 30$ N.

Let the tension in cord B be T_B.

The angle between T_A and T_B is

$$180^\circ - (50^\circ + 60^\circ) = 70^\circ.$$

Applying Lami's Theorem to fig.4.17b, we have

$$\frac{W}{\sin 70^\circ} = \frac{T_A}{\sin(90^\circ + 60^\circ)}$$

$$\therefore W = \frac{T_A \sin 70^\circ}{\sin 150^\circ} = \frac{30 \sin 70^\circ}{\sin 150^\circ}$$

$$= \frac{(30)(0.9397)}{0.5} = 56.38 \text{ N}$$

Also,

$$\frac{T_A}{\sin(90^\circ + 60^\circ)} = \frac{T_B}{\sin(90^\circ + 50^\circ)}$$

Substituting $T_A = 30$ N, we have

$$\frac{30 \text{ N}}{\sin 150^\circ} = \frac{T_B}{\sin 140^\circ}$$

$$\therefore T_B = \frac{(30)(\sin 140^\circ)}{\sin 150^\circ}$$

$$= \frac{(30)(0.6428)}{0.5} = 38.57 \text{ N}$$

Scanned by CamScanner

Problem Set 4

1 (a) State Lami's Theorem.

(b) In fig. 4.18, the weight W_1 is 300 N. Find T_1, T_2, T_3, and W_2

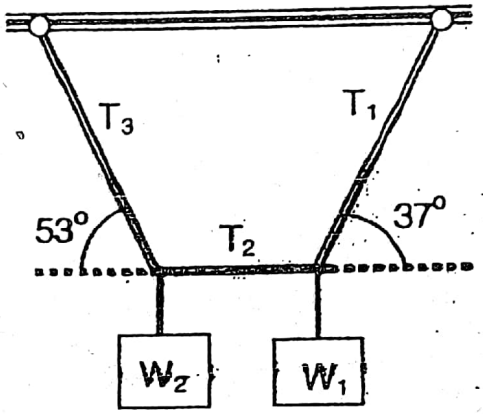

Fig. 4.18

Answer: $T_1 = 500$ N, $T_2 = 400$ N, $T_3 = 670$ N, $W_2 = 530$ N.

2. Where must an 800-N weight be hung on a uniform, 100–N pole of length 100 m so that a boy at one end supports one-third as much as a man at the other end?
Answer: 22 m

3. A long uniform plank rest against a frictionless vertical wall. The coefficient of static friction between the plank and the floor is $\mu_s = 0.35$. What is the smallest angle θ at which the plank can remain stationary?
Answer: 55°

4. A trunk with a mass of 100.0 kg is pulled 20.0 m across the floor by a rope making an angle of 35° with the horizontal. If the coefficient of sliding friction is 0.25, find (a) the tension in the rope, and (b) the work done.
Answer: **(a) F = 254.4 N (b) W = 4167 J**

5. What horizontal force P is required to just hold a 200-N block on a 60° inclined plane if $\mu_s = 0.4$? **Answer: P = 157 N**

6. A uniform rod 1 m long of mass 50 g is supported horizontally on two knife edges placed 10 cm from its ends. What will be the reactions at these supports when a 100 g mass is suspended 10 cm from the mid-point of the rod? Answer: 0.625 N, 0.875 N.

7. The foot of a uniform ladder is on a rough horizontal ground, and the top rests against a smooth vertical wall. The weight of the ladder is 400 N, and a man weighing 800 N stands on the ladder one-quarter of is length form the bottom. If the inclination of the ladder to the horizontal is 30°, find the reaction at the wall and the total force at the ground. **Answer: 690 N, 1390 N**

Scanned by CamScanner

CHAPTER FIVE

Work, Energy and Power

5.1 Work

The term work in science has a definite meaning and differs from its everyday one. A person holding a heavy load at rest does no work in the scientific sense.

Work is done in science when a force moves its point of application along the direction of its line of action.

In its simplest mechanical form, work is defined as the product of the force and the distance through which the force acts:

Work = force x distance.

If the direction of the force and the distance moved are both vertically upward, we write

$$W = Fh \qquad (5.1)$$

And if the distance and the force are both horizontal, it is customary to write

$$W = Fx$$

Thus, the unit of work = the unit of force x the unit distance = Nm

Example 5.1

Find the work done in lifting a mass of 5.0 kg through a height of 3.0 m.

Solution:

m = 5.0 kg, h = 3.0 m.

$$\therefore F = mg = (5.0\ kg)(9.80\ m/s^2) = 49\ N.$$
$$\therefore W = Fh = (49\ N)(3\ m) = 147\ Nm$$

In the mksA system of units, work has the absolute units kg m^2/s^2, which are equal to the derived units, Newton meters. In the cgs system of units, the corresponding absolute units are g cm^2/s^2, which are equal to the derived units, dyne centimeters.

Scanned by CamScanner

In the mksA system of units, a force of 1 Newton acting through a distance of 1 m performs an amount of work equivalent to 1 joule:

1 Newton meter = 1 joule.

In the cgs system,

1 dyne cm = 1 erg.

The joule, as a unit of work was named to honour the English physicist, James Prescott Joule (1818–1889). He was born in December 24, 1818 near Manchester. In 1840, he stated the law of the equivalent of heat, and later the first law of thermodynamics. The Royal Society of London published his numerous scientific papers in 1884.
Microsoft ® Encarta ® 2009

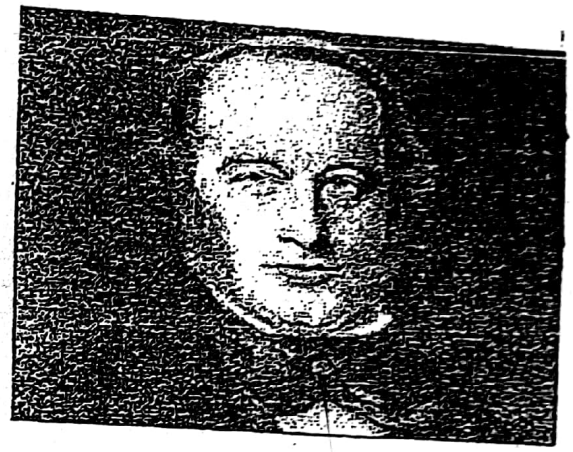

James Prescott

5.2 Classification of Mechanical Energy

Mechanical energy is divided into two categories: potential energy P.E and Kinetic Energy K.E.

5.2.1 Potential Energy

A body is said to have potential energy if by virtue of its position or state it is able to do work.

The figure below shows a body of mass m raised to a height h above the ground.

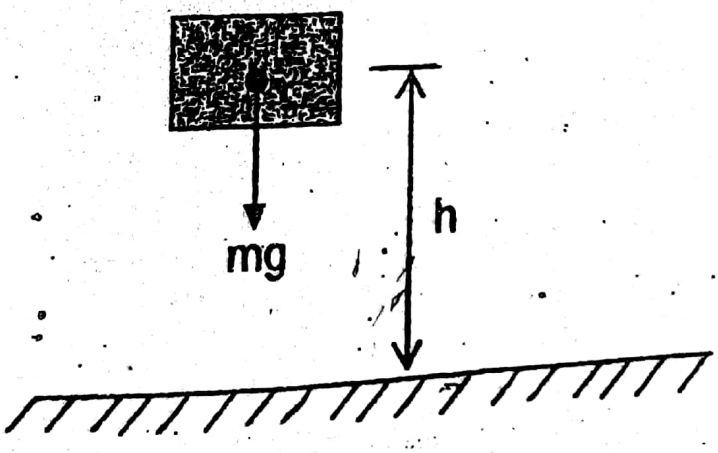

Scanned by CamScanner

The potential energy possessed by this body is given by

$$P.E = Fh$$

Since the weight of the body is equal to the gravitational force $F = mg$,

$$P.E = Fh = mgh \qquad (5.2)$$

The work done in lifting it has been stored up as potential energy in the body. This energy can be regained by dropping the body back to the ground, for in doing so, it can be made to perform some kind of work.

Example 5.2

A mass of 5.0 kg is raised to a height of 2.50 m above the ground. Calculate its potential energy.

Solution:

$m = 5.0$ kg, $h = 2.50$ m, $g = 9.80$ m/s^2.

$$\therefore P.E = mgh = (5.0)(9.8)(2.50) = 122.5 \text{ J}.$$

Example 5.3

A uniform rod with a length l and mass m is in a vertical position, as shown in the figure below. What is the potential energy P.E of the rod with respect to the surface shown?

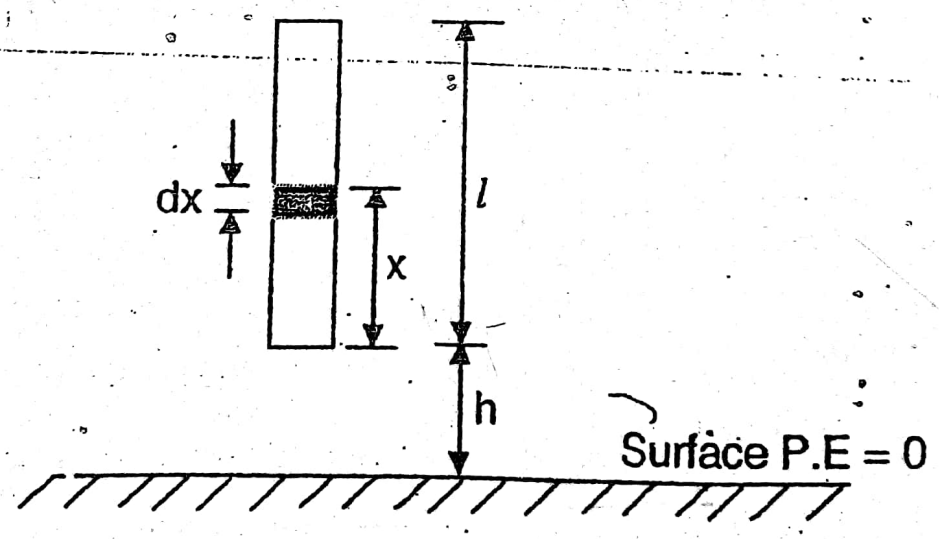

Scanned by CamScanner

Solution:

Mass of rod = m
Length of rod = L
Let dm be the mass of the small element and dx its length.

Since the rod is uniform, $dm = \frac{m}{L}dx$.

The work dw done by gravity in raising the mass element from the reference level to position h+x is

$$dW = d(P.E) = (dm)(g)(height) = \left(\frac{m}{l}dx\right)g(h+x)$$

To get the total potential energy, we integrate d(P.E) from x = 0 to x = l :

$$P.E = \int_0^l d(P.E) = \int_0^l \frac{mg}{l}(h+x)dx$$

$$= \frac{mg}{l}\left(\frac{1}{2}l^2 + hl\right) = mg\left(h + \frac{1}{2}l\right)$$

Thus, the potential energy is the same as if the total concentrated mass m is raised from the reference level to a height $h + \frac{1}{2}l$.

5.2.2 Kinetic Energy

The Kinetic Energy K.E of a moving body is defined as ***its ability to do work by virtue of its motion***. If the mass of the body is m and the body moves with constant speed v, the Kinetic Energy K.E is given by

$$K.E = \frac{1}{2}mv^2 \qquad (5.3)$$

Example 5.4

Calculate the kinetic energy of a 20-kg mass, moving with a speed of 4.0 m/s.

Solution: m = 20.0 kg, v = 40 m/s

$$\therefore K.E = \frac{1}{2}mv^2 = \frac{1}{2}(20.0)(4.0)^2 = 160.0 \text{ J.}$$

Scanned by CamScanner

5.3 Power

Power P is defined as the rate of doing work or the rate at which work is being done:

$$\text{Power} = \frac{\text{Work}}{\text{time interval taken}}$$

$$= \frac{dw}{dt} = \frac{\bar{F}\Delta\bar{s}}{\Delta t} \qquad (5.4)$$

Hence, the unit of Power $= \frac{\text{Unit of Work}}{\text{Unit of time}} = \frac{\text{Joule}}{\text{Second}}$ or J/s

Thus, the S. I. unit of power is the Joule/second. One Joule per second is called the *watt*, a unit of power.

The watt as a unit of power was named after James Watt (1736 – 1819), a Scottish engineer and inventor.

Scottish inventor James Watt made vast improvements to the steam engine, making it practical for large-scale industrial use. In 1764 Watt was given a steam engine to repair. While working on the engine, he realized that it wasted energy. He eventually introduced a variety of modification, including a separate cooling chamber for the steam that made the engine much more efficient.
Microsoft ® Encarta ® 2009

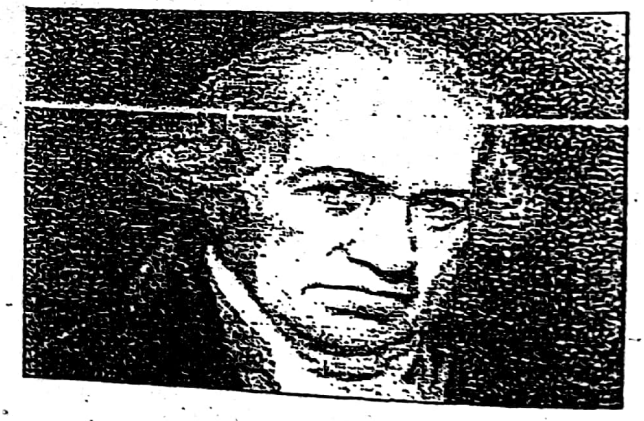

James Watt

Another unit that is also in widespread use is the horsepower (hp):

1hp = 746 W

Scanned by CamScanner

According to equation (5.4) the instantaneous power, the rate at which work is being done at any instant, is found by letting the time interval Δt approach zero.

If $\bar{F}\cdot\Delta\bar{s}$ is the work done, then the instantaneous power P is

$$P = \lim_{\Delta t \to 0} \frac{\bar{F}\cdot\Delta\bar{s}}{\Delta t}$$

Now $\lim_{\Delta t \to 0} \frac{\Delta\bar{s}}{\Delta t} = \frac{d\bar{s}}{dt}$ = instantaneous velocity $\bar{v}$.

Then, we have for the instantaneous power

$$P = \bar{F}.\bar{v}$$

From equation (5.4), work can be expressed as

Work = Power x time interval.

Thus, if power is measured in kilowatt (1000 W) and time in hour, we can expressed the unit of work as kilowatt–hour (kWh).

Example 5.5

What minimum horsepower motor is needed to lift an 80-kg man at a constant speed of 0.20 m/s?

Solution:

m = 80kg, v = 0.20 m/s.

$\therefore F = mg = (80)(9.8) = 784$ N.

$P = Fv = (784)(0.20) = 157$ W.

Now, 1hp = 746W

$$\therefore 175\ W = \frac{1.57}{746} = 0.21\ hp$$

Scanned by CamScanner

5.4 Conservative Forces

Consider the situation shown in fig. 5.1. An object O is slid on a rough surface from A, clockwise around the dotted path through B and then back to A. The frictional force f opposes the motion of the object along the entire path. The total work done by the frictional force on the block is

$$W = -fl$$

where l is the length of the dotted path. Through whatever path we follow, the frictional force always opposes the motion of the object. For this reason the work done by the frictional force is never zero. Because the work done is non-zero, we say that the frictional force is non-conservative.

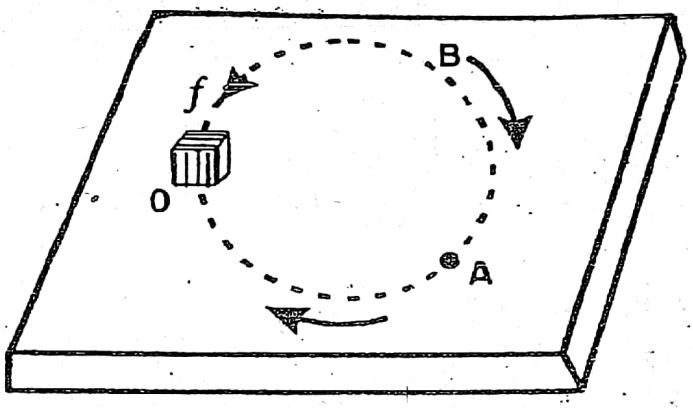

Fig. 5.1

Now consider the same object, this time being moved under gravitational force, fig. 5.2. The object is moved from A to B to C and back to A.

Fig.5.2

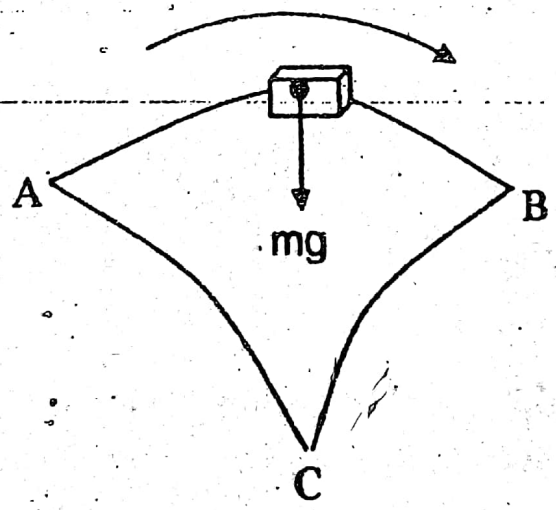

The gravitational force, which is the weight of the object, is mg.

Scanned by CamScanner

Definition:

A force acting on a particle is conservative if the total work done on the particle as the particle is moved around any closed path is zero.

5.5 Relation between conservative forces and potential energy

We associate with every conservative field of force $\bar{F}$ a physical quantity called the ***potential energy*** denoted by P.E. We define the increase in potential energy during the time interval, $t_2 - t_1$, by

$$P.E = -\int_{t_1}^{t_2} \bar{F}.d\bar{r} = -\int_{t_1}^{t_2} \bar{F}\,\frac{d\bar{r}}{dt}.dt$$

$$= -\int_{t_1}^{t_2} \bar{F}.\,\bar{v}\,dr$$

Example 5.6:

What is the potential energy associated with the constant gravitational field of force?

Solution:

If we assume the z–axis to be directed upwards, then

$$\bar{F} = -mg\hat{k},$$

The negative sign means that the gravitational force is directed downwards.

$$\therefore P.E. = -\int \bar{F}.\bar{v}dt$$

$$= -\int\left(-mg\hat{k}\right).\bar{v}dt = -mg\int\frac{dz}{dt}dt = mgz + A$$

where A is a constant of integration.

We may decide that the potential is zero when z = 0. Then we choose A = 0 and we say that horizontal plane z = 0 is the level of zero potential energy associated with the constant gravitational field of force.

Scanned by CamScanner

5.6 Conservation of Energy

Suppose a particle of mass m is subjected to a conservative force $\bar{F}$. The equation of motion is

$$\bar{F} = M\ddot{\bar{r}},$$

where $\ddot{\bar{r}} = \frac{d^2\bar{r}}{dt^2}$.

The Kinetic energy of the particle is

$$K \cdot E = \frac{1}{2}m\dot{r}^2,$$

where $\dot{\bar{r}} = \frac{d\bar{r}}{dt}$.

The potential energy P.E associated with the conservative force $\bar{F}$ is

$$P.E = -\int \bar{F}.\dot{\bar{r}}\,dt = -\int m\ddot{\bar{r}}.\dot{\bar{r}}dt$$

Now,

$$\frac{d}{dt}(\dot{r}.\dot{r}) = \dot{r}\ddot{r} + \dot{r}\ddot{r} = 2\dot{r}\ddot{r}$$

$$\therefore \ddot{r}\dot{r} = \frac{1}{2}\frac{d}{dt}(\dot{r}\dot{r})$$

$$\therefore P.E = -\int m\ddot{r}.\dot{r}dt$$

$$= -\int \frac{1}{2}m\frac{d}{dt}(\dot{r}.\dot{r})dt$$

$$= -\frac{1}{2}m\dot{r}.\dot{r} + A = -\frac{1}{2}m\dot{r}^2 + A = -\frac{1}{2}mv^2 + A$$

$$\therefore P.E = -K.E + A$$

$$\therefore P.E. + K.E = A \qquad (5.5)$$

i.e. the sum of potential energy and kinetic energy is constant throughout the motion. This is the principle of conservation of energy.

Scanned by CamScanner

Example 5.7:

Just before striking the ground, a 2.0–kg mass has 400 J of kinetic energy. If friction can be ignored, from what height was it dropped?

Solution:

Let the body be at a height h, before dropping. At this height,

Potential energy $P.E_1 = mgh_1$ and kinetic energy $K.E_1 = \frac{1}{2}mu_1^2 = 0$.

The K.E is zero at this height because m is dropped from rest, i.e. $u_1 = 0$.
Just before reaching the ground, $P.E_2 = mgh_2 = 0$, since $h_2 = 0$.

The kinetic energy just before striking the ground is $K.E_2 = \frac{1}{2}mv_2^2$,

where v is the velocity just before striking the ground.

From the principle of conservation of energy, the sum of the P.E and K.E of the mass before dropping = sum of its P.E and K.E just before striking the ground.

$$\therefore P.E_1 + K.E_1 = P.E_2 + K.E_2$$

$$mgh_1 + \frac{1}{2}mu_1^2 = mgh_2 + \frac{1}{2}mv_2^2$$

$$mgh_1 + 0 = 0 + 400$$

$$\therefore h_1 = \frac{400}{mg} = \frac{400}{2(9.8)} = 20.4 \text{ m}$$

Example 5.8:

A pendulum bob has a mass of 0.5 kg. It is suspended by a cord 2 m long, which is pulled back through an angle of 36.9°, fig. 5.4. Find

(a) its maximum potential energy relative to its lowest position
(b) its potential energy when the cord makes an angle of 10° with the vertical
(c) its maximum speed, and
(d) its speed when the cord makes an angle of 10° with the vertical.

Scanned by CamScanner

Fig. 5.4

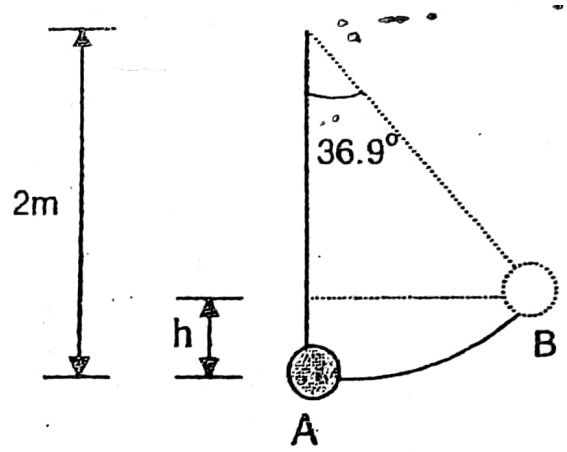

Solution: m = 0.5kg

(a) The maximum potential energy is obtained when the bob is at point B. Hence,

$$P.E_{max} = mgh$$

But from fig. 5.4, $h = 2 - 2\cos 36.9^\circ = 0.4$ m

$$\therefore P.E_{max} = 0.5 \times 9.8 \times 0.4 = 1.96 \text{ J}$$

(b) When $\theta = 10^\circ$

$$h = 2 - 2\cos 10^\circ = 0.0304$$

$$\therefore P.E = mgh = (0.5)(9.8)(0.0304) = 0.150 \text{ J}$$

(c) We get the maximum velocity when the bob is at A. By the conservation of energy,

total energy at B = total energy at A.

$$\therefore P.E_B + K.E_B = P.E_A + K.E_A$$

$$1.96 + 0 = 0 + \frac{1}{2}mv^2_{max}$$

$$\therefore v_{max} = \frac{2(1.96)}{0.5} = 2.8 \text{ m/s}$$

(d) The total energy when θ is equal to 10° = total energy when the bob is at B

$$P.E_A(\theta = 10^\circ) + K.E._A(\theta = 10^\circ) = P.E._B + K.E_B$$

$$0.149 + \frac{1}{2}(0.5)v^2 = 1.96 + 0$$

$$\therefore v^2 = 7.24 \qquad \therefore v = 2.69 \text{ m/s}$$

Scanned by CamScanner

5.7.0 Resilience and the Coefficient of Restitution

Experimental observations show that most hard bodies are more **resilient** (*the ability for an object to return to its original shape after being bent or twisted*) in collision and rebound from each other quite rapidly, while soft bodies are less resilient and rebound much more slowly.

Resilience is defined as a compression or rapid deformation, without the development of permanent deformation. The vigor with which a body restores itself to its original shape after a deformation is called **restitution.**

We define the **coefficient of restitution** e as the ratio of the velocity with which the two bodies separate after the collision to the velocity of their approach before collision:

$$e = \frac{\text{velocity of seperation}}{\text{velocity of approach}} = \frac{|v_2 - v_1|}{|u_1 - u_2|}$$

If e = 1, the collision is said to be elastic. In this case, both momentum and kinetic energy are conserved.

If e = 0, the collision is said to be completely in-elastic. In in-elastic collision, some of the initial kinetic energy is absorbed and converted into different forms of energy. Hence, kinetic energy is not conserved. Only momentum is conserved.

Example 5.9:

An object A of mass 0.8 kg moving to the right with a speed of 5 m/s collides head-on with another object B of mass 1.2 kg moving in the opposite direction with a speed of 4 m/s. After the collision, A is moving to the left with a speed of 4 m/s. Find the velocity of B after collision and the coefficient of restitution.

Solution: $m_1 = 0.8$ kg, $u_1 = 5$ m/s, $v_1 = -4$ m/s

$m_2 = 1.2$ kg, $u_2 = -4$ m/s, $v_2 = ?$

Using the law of conservation of linear momentum, we have

$$m_1 u_1 + m_2 u_2 = m_1 v_1 + m_2 v_2$$

$$(0.8)(5) + (1.2)(-4) = (0.8)(-4) + 1.2v_2$$

Scanned by CamScanner

Solving, we get $v_2 = 2$ m/s.

The coefficient of restitution is

$$e = \left|\frac{\text{Velocity of Separation}}{\text{Velocity of approach}}\right| = \left|\frac{v_2 - v_1}{u_1 - u_2}\right| = \left|\frac{2-(-4)}{5-(-4)}\right| = \frac{2+4}{5+4} = \frac{2}{3}$$

Example 5.10:

A golf ball of mass 45.8 g is dropped on a sidewalk from a height of 2 m and rebounds to a height of 1.5 m. What was the impulse? Assuming that the ball was in contact with the concrete for 7 ms, find the average acceleration. What was the coefficient of restitution?

Solution:

Downward Motion:

$s = h_o = -2$ m, $u_o = 0$, velocity just before striking the ground $v_o = ?$, $a = -g$.

$$v_0^2 = u_0^2 + 2as$$

$$\therefore v_0^2 = 0^2 + 2(-9.8)(-2) = 39.2$$

$\therefore v_0 = \pm 6.26$ m/s. Since the ball is moving down, $v_o = -6.26$ m/s.

Upward Motion

Let the rebound height be h_1, then $h_1 = 1.5$ m.
Let the velocity just after striking the ground be u_1.
Final velocity after the rebound $v_1 = 0$.

Using $v_1^2 = u_1^2 + 2as$, we get

$$0 = u_1^2 + 2(9.8)(1.5)$$

$$u_1^2 = 29.4$$

$$\therefore u_1 = 5.42 \text{ m/s}$$

Change in momentum $= m(u_1 - v_o)$

$$= (0.0458)[5.42 - (-6.26)] = 0.535 \text{ N.s}$$

Scanned by CamScanner

$$\text{Coefficient of restitution } e = \left|\frac{\text{velocity of separation}}{\text{velocity of approach}}\right|$$

$$= \left|\frac{u_1}{v_0}\right| = \frac{5.42}{6.26} = 0.866$$

$$\text{Average acceleration} = \frac{\text{change in velocity}}{\text{time}}$$

$$= \frac{u_1 - u_0}{\Delta t} = \frac{5.42-(-6.26)}{0.007} = 1669 \text{ m/s}^2$$

Example 5.11:

A ball is dropped from a height h above a tile floor and rebounds to a height of 0.64h. Find the Coefficient of restitution between the ball and the floor.

Solution:

Downward Motion:

Let the initial velocity be u_o and the velocity just before collision be v_o. Since the ball is dropped from the height h, $u_o = 0$, $s = -h$.

Using $v^2 = u^2 + 2as$, we have

$$v_o^2 = 0^2 - 2(9.8)(-h)$$

$$\therefore v_o = \sqrt{19.6h}$$

Upward Motion (After Collision)

Let the initial velocity just after collision be u_1, and the final velocity after collision be v_1.

The final velocity v_1 is zero when $s = 0.64h$.

Substituting these values in $v^2 = u^2 + 2as$, we have

$$0 = u_1^2 + 2(-9.8)(0.64h)$$

Scanned by CamScanner

Solving, we have

$$u_1 = \sqrt{12.54h}$$

$$\therefore e = \left|\frac{\text{Velocity of Separation}}{\text{Velocity approach}}\right|$$

$$= \left|\frac{u_1}{v_0}\right| = \sqrt{\frac{2(9.8)0.64h}{2(9.8)h}} = 0.8$$

5.7.1 Elastic Collision

For elastic collision, both momentum and kinetic energy are conserved. For conservation of linear momentum, we have

$$m_1u_1 + m_2u_2 = m_1v_1 + m_2v_2, \qquad (5.5a)$$

and for conservation of kinetic energy, we have

$$\frac{1}{2}m_1u_1^2 + \frac{1}{2}m_2u_2^2 = \frac{1}{2}m_1v_1^2 + \frac{1}{2}m_2v_2^2 \qquad (5.5b)$$

Also for elastic collision, the coefficient of restitution e = 1.

$$\therefore e = \frac{v_2 - v_1}{u_1 - u_2} = 1$$

$$\therefore v_2 - v_1 = u_1 - u_2$$

$$\therefore v_2 = u_1 - u_2 + v_1 \qquad (5.5c)$$

Substituting v_2 into equation (5.5a), we have

$$m_1u_1 + m_2u_2 = m_1v_1 + m_2(u_1 - u_2 + v_1)$$

Solving for v_1, we get

$$\boxed{v_1 = \frac{2m_2u_2 + u_1(m_1 - m_2)}{m_1 + m_2}} \qquad (5.5d)$$

Similarly, from equation (5.5c),

$$v_1 = v_2 - u_1 + u_2$$

Scanned by CamScanner

Substituting v_1 into equation (5.5a) and then solving for v_2, we have

$$\boxed{v_2 = \frac{2m_1u_1 + u_2(m_2 - m_1)}{m_2 + m_1}} \quad (5.5e)$$

Special Cases:

1. When m_2 is at rest.

If m_2 is at rest, $u_2 = 0$. Hence, equation (5.5d) becomes

$$v_1 = \frac{u_1(m_1 - m_2)}{m_1 + m_2} \quad (5.5f)$$

Similarly, substituting $u_2 = 0$ in equation (5.5e) gives

$$v_2 = \frac{2m_1u_1}{m_2 + m_1} \quad (5.5g)$$

2. When $u_2 = 0$ and $m_1 = m_2 = m$,

$$v_1 = \frac{u_1(m - m)}{m + m} = 0$$

$$v_2 = \frac{2mu_1}{m + m} = u_1$$

This shows that when two identical bodies collide elastically, the first body which is initially in motion, comes to rest (since $v_1 = 0$), while the second body initially at rest ($u_2 = 0$) moves off with a velocity equal to the initial velocity of the first (since $v_2 = u_1$). Both momentum and kinetic energy of the first body is completely transferred to the second.

3. If the mass m_2 is at rest ($u_2 = 0$) but $m_1 \neq m_2$

The initial kinetic energy of mass m_1 is

$$K_{1i} = \frac{1}{2}m_1u_1^2 \quad (5.5h)$$

and that of mass m_2 is $K_{2i} = \frac{1}{2}m_2u_2^2 = 0$.

Scanned by CamScanner

The final kinetic energy of mass m_1 is

$$K_{1f} = \frac{1}{2}m_1v_1^2 = \frac{1}{2}m_1u_1^2\left(\frac{m_1 - m_2}{m_1 + m_2}\right)^2 = K_{1i}\left(\frac{m_1 - m_2}{m_1 + m_2}\right)^2 \quad (5.5i)$$

Using (5.5g), the final kinetic energy of mass m_2 is

$$K_{2f} = \frac{1}{2}m_2v_2^2 = \frac{1}{2}m_2\left(\frac{2m_1u_1}{m_2 + m_1}\right)^2 = \frac{1}{2}m_1u_1^2 \cdot \frac{4m_1m_2}{(m_1 + m_2)^2} = K_{1i} \cdot \frac{4m_1m_2}{(m_1 + m_2)^2}$$

$$\therefore \frac{K_{2f}}{K_{1i}} = \frac{4m_1m_2}{(m_1 + m_2)^2}$$

5.7.2 Inelastic Collision

For completely inelastic collision,

$$e = \frac{v_2 - v_1}{u_1 - u_2} = 0$$

$$\therefore v_2 - v_1 = 0$$

or

$$v_2 = v_1 = v$$

If the mass m_2 is at rest, $u_2 = 0$. Then the total momentum P_i before collision is

$$P_i = m_1u_1 + m_2u_2 = m_1u_1 + m_2(0) = m_1u_1$$

The total momentum P_f after collision is

$$P_f = m_1v_1 + m_2v_2 = (m_1 + m_2)v,$$

since $v_1 = v_2$.

Applying the principle of the conservation of linear momentum, we have

$$P_i = P_f$$

$$\therefore m_1u_1 = (m_1 + m_2)v$$

$$\therefore v = \frac{m_1u_1}{m_1 + m_2} \quad (5.5j)$$

Scanned by CamScanner

The total kinetic energy $K.E_i$ before collision is

$$K.E_i = \frac{1}{2}m_1u_1^2 + \frac{1}{2}m_2u_2^2 = \frac{1}{2}m_1u_1^2,$$

while the total kinetic energy $K.E_f$ after collision is

$$K.E_f = \frac{1}{2}m_1v_1^2 + \frac{1}{2}m_2v_2^2 = \frac{1}{2}(m_1 + m_2)v^2$$

where $v_1 = v_2$.

Therefore,

$$\frac{K \cdot E_f}{K \cdot E_i} = \frac{\frac{1}{2}(m_1 + m_2)v^2}{\frac{1}{2}m_1u_1^2}$$

Substituting the value of v from equation (5.5j), we have

$$\frac{K \cdot E_f}{K \cdot E_i} = \frac{m_1}{m_1 + m_2}$$

5.8 Collisions In Two Dimension

In general, the impact between two bodies is not a head-on collision but one in which a moving body collides with a stationary one, and the two bodies recoil in different directions.

Fig. 5.5 shows a mass m_1 moving with an initial velocity u_1 and colliding with a mass m_2 initially at rest, $u_2 = 0$.

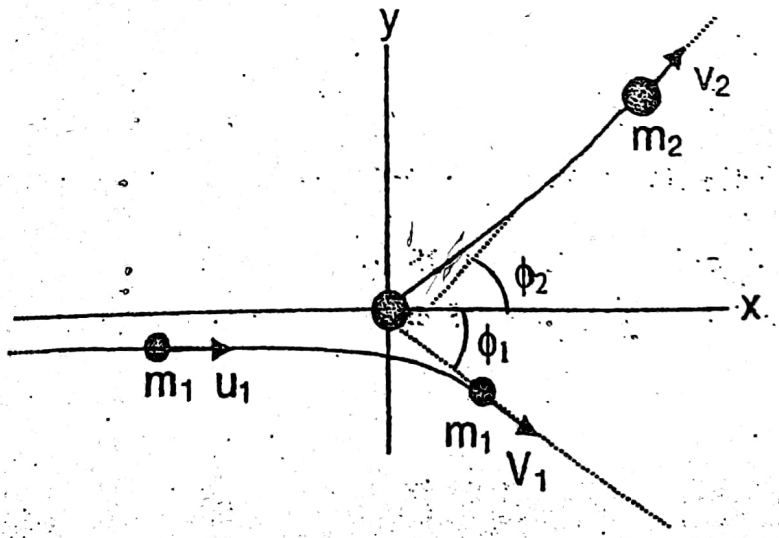

Fig. 5.5

Scanned by CamScanner

After collision, mass m_1 recoils in a direction ϕ_1 with a velocity v_1 while mass m_2 recoils in a different direction ϕ_2 with a velocity v_2.

We can resolve the momentum into x and y–components and then apply the principle of conservation linear momentum to each component:

Components of Momentum:

The momentum of mass m_1 before collision $P_{1i} = m_1u_1$.
P_{1i} makes an angle of 0° with the x – axis.

$$\therefore \text{ x – component of } P_{1i} = P_{1i}\cos 0^o = m_1u_1$$
$$\text{y – component of } P_{1i} = P_{1i}\sin 0^o = m_1u_1 \sin 0^o = 0.$$

The momentum of mass m_1 after collision $P_{1f} = m_1v_1$.
P_{1f} makes an angle of $(360^o - \phi_1)$ with the x – axis.

$$\therefore \text{x – component of } P_{1f} = P_{1f}\cos(360^o - \phi_1) = m_1v_1\cos(360^o - \phi_1) = m_1v_1\cos\phi_1$$
$$\text{y – component of } P_{1f} = P_{1f}\sin(360^o - \phi_1) = m_1v_1\sin(360^o - \phi_1) = -m_1v_1\sin\phi_1$$

The momentum of mass m_2 before collision $P_{2i} = m_2u_2 = m_2 \times 0 = 0$
The momentum of mass m_2 after collision $P_{2f} = m_2v_2$.
P_{2f} makes an angle of ϕ_2 with the x-axis.

$$\therefore \text{x – component of } P_{2f} = P_{2f}\cos\phi_2 = m_2v_2\cos\phi_2$$
$$\text{y – component of } P_{2f} = P_{2f}\sin\phi_2 = m_2v_2\sin\phi_2$$

Conservation of components of momentum:

The sum of the x-components of momentum before collision is equal to the sum of the x-components of momentum after collision. Hence,

$$m_1u_1 = m_1v_1\cos\phi_1 + m_2v_2\cos\phi_2$$
$$\therefore m_1u_1 - m_1v_1\cos\phi_1 = m_2v_2\cos\phi_2 \qquad (5.6)$$

Similarly, the conservation of y–components of momentum is obeyed:

$$0 = -m_1v_1\sin\phi_1 + m_2v_2\cos\phi_2$$
$$\therefore m_1v_1\sin\phi_2 = m_2v_2\cos\phi_2 \qquad (5.7)$$

Scanned by CamScanner

If we square both sides of equation (5.6), we get

$$m_1^2u_1^2 - 2(m_1u_1)(m_1v_1)\cos\phi_1 + m_1^2v_1^2\cos^2\phi_1 = m_2^2v_2^2\cos\phi_2 \quad (5.8)$$

Similarly, squaring both sides of equation (5.7) gives

$$(m_1v_1)^2\sin^2\phi_1 = (m_2v_2)^2\sin^2\phi_2 \quad (5.9)$$

Adding equation (5.8) and (5.9) we obtain

$$(m_1u_1)^2+(m_1v_1)^2(\cos^2\phi_1+\sin^2\phi_1)-2(m_1u_1)(m_1v_1)\cos\phi_1=(m_2v_2)^2(\cos^2\phi_1+\sin^2\phi_1)$$

$$\therefore (m_1u_1)^2+(m_1v_1)^2-2(m_1u_1)(m_1v_1)\cos\varphi_1=(m_2v_2)^2$$

$$\therefore \cos\varphi_1 = \frac{u_1^2+v_1^2-\frac{m_2}{m_1}\left(u_1^2-v_1^2\right)}{2u_1v_1} \quad (5.10)$$

In the special case of a gas, where the collisions between atoms and molecules are perfectly elastic, conservation of energy also applies. Then

K.E before collision = K.E after collision.

$$\frac{1}{2}m_1u_1^2=\frac{1}{2}m_1v_1^2+\frac{1}{2}m_2v_2^2 \quad (5.11)$$

5.9 Ballistics

The branch of science dealing with the measurement of bullet velocities and the effects of bullets upon targets of various kinds is called Ballistics. A major part of the activity of ballistics is concerned with the determination of muzzle velocity of guns.

Example 5.11: **The Ballistic Pendulum.**

A Ballistic pendulum is a device for finding the speed of bullets. A bullet of mass m is shot into a block of mass M, as shown in fig 5.6. After collision, the center of mass of the block swings to a height h. Find the speed of the bullet v, in terms of m, M, and h.

Scanned by CamScanner

Fig 5.6

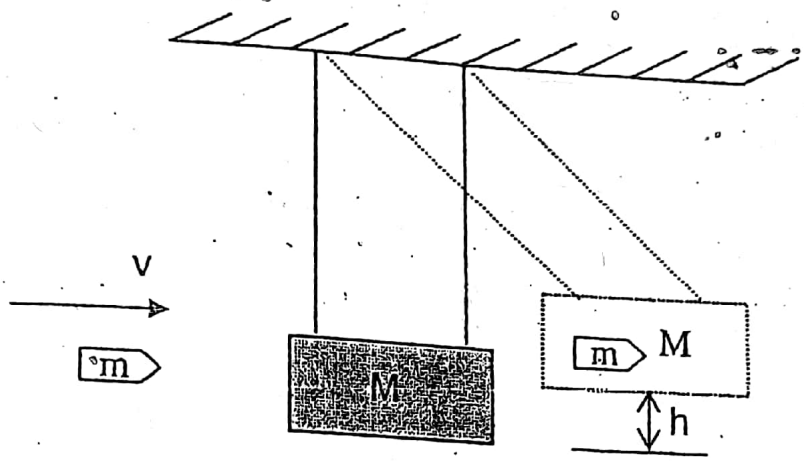

Solution

Mass of bullet = m
Velocity of bullet before impact = v
Mass of block = M
After impact, the bullet stick to the block and the two move with a common initial velocity V.

From the principle of conservation of linear momentum, the total momentum before collision is equal to the total momentum after collision. Hence,

$$mv = (m + M)\,V \qquad \text{(i)}$$

After the collision, the kinetic energy K.E of the block and the bullet is

$$K.E = \frac{1}{2}(m+M)V^2$$

When the block and the embedded bullet attain the maximum height h, they stop and the whole of the K.E becomes P.E. By the energy conservation law,

$$\frac{1}{2}(m+M)V^2 = (m+M)gh \qquad \text{(ii)}$$

$$\therefore V = \sqrt{2gh}$$

From equation (i), the speed of the bullet v is

$$v = \frac{m+M}{m}V = \frac{m+M}{m}\sqrt{2gh}$$

Scanned by CamScanner

5.10 The Rocket Equation

An interesting problem in momentum conservation occurs when a rocket is accelerated by ejecting a stream of rapidly moving gas particles through nozzles located at its rear. These hot gases are the result of burning of a fuel in the combustion chamber of the rocket. The mass of the rocket continually decreases as the fuel and oxidizer are consumed and ejected.

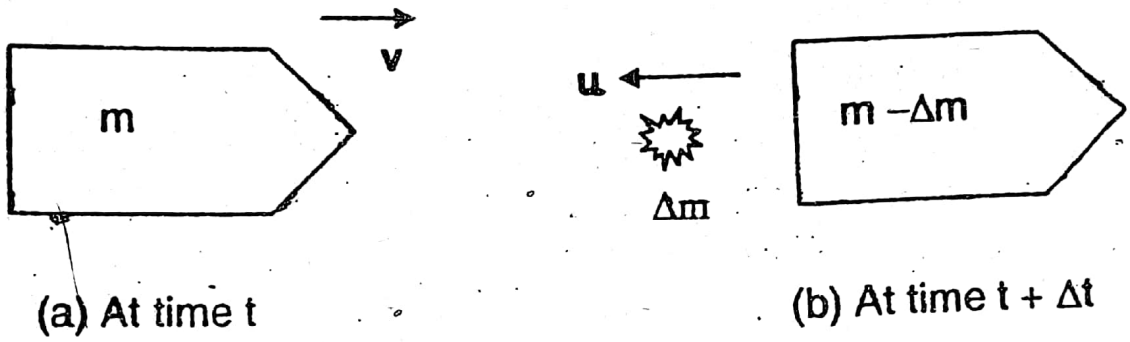

Fig. 5.7

Suppose the rocket at time t has a mass m and a velocity v relative to the earth. An amount of gas with mass Δm is ejected from the nozzle during a time interval Δt as shown in fig. 5.7.

At the end of this time interval, the rocket (now with mass m–Δm) moves with velocity v+Δv and the ejected gas has a velocity –u relative to the rocket. Relative to the earth, the ejected mass Δm has velocity v – u.

Initial momentum P_i before gas is ejected = mv

The final momentum P_f after a gas of mass Δm is ejected at the end of the time interval Δt is

$$P_f = (m - \Delta m)(v + \Delta v) + \Delta m\, u$$

Suppose an external force F_{ext} acts on the rocket. This force might include gravity, air resistance etc. According to Newton's Second law,

$$F_{ext} = \text{rate of a change of momentum}$$

$$= \frac{P_f - P_i}{\Delta t} = \frac{(m - \Delta m)(v + \Delta v) + \Delta m u - mv}{\Delta t}$$

Scanned by CamScanner

where $u\Delta m$ is the momentum of the ejected gas relative to the rocket. The momentum relative to the earth is $(v-u)\Delta m$.

$$\therefore F_{ext} = \frac{(m-\Delta m)(v+\Delta v)+\Delta m(v-u)-mv}{\Delta t} = \frac{m\Delta v - \Delta m\,\Delta v - u\,\Delta m}{\Delta t}$$

Because $m >> \Delta m$ and $v >> \Delta v$, we can neglect the term $\Delta m\ \Delta v$:

$$\therefore F_{ext} = m\frac{\Delta v}{\Delta t} - u\frac{\Delta m}{\Delta t}$$

In the limit $\Delta t \to 0$, we have

$$F_{ext} = m\frac{dv}{dt} - u\frac{dm}{dt}$$

$$\therefore m\frac{dv}{dt} = F_{ext} + u\frac{dm}{dt} \qquad (5.12)$$

Equation (5.12) is often called the ***rocket equation***. The term $u\frac{dm}{dt}$ is called the thrust of the rocket engine. Thus, the thrust Ω is

$$\Omega = u\frac{dm}{dt}$$

Example 5.12:

A spaceship is stationary in deep space* when its rocket engine is ignited for a 100-s "burn". Hot gases are ejected at a constant rate of 150 kg/s with a velocity relative to the spacecraft of 300 m/s. The initial mass of the spacecraft (plus fuel and oxidizer) is 25,000 kg.

(a) Determine the thrust of the rocket engine and the initial acceleration in units of g.

(b) What is the final velocity of the spacecraft?

* deep space: space beyond the Earth's gravitational influence or beyond the orbit of the Moon

Scanned by CamScanner

Solution:

(a) If we take the direction of the spacecraft as positive,

$u = -300$ m/s, $\frac{dm}{dt} = -150$ kg/s,

$M = 25000$ kg and $t = 100$ s.

Thrust $\Omega = u\frac{dm}{dt} = (-300\ m/s)(-150\ kg/s) = 450{,}000$ N.

The initial acceleration $a = \frac{dv}{dt}$.

In the absence of any external force, $F_{ext} = 0$, the rocket equation becomes

$$m\frac{dv}{dt} = u\frac{dm}{dt}.$$

$$\therefore a = \frac{dv}{dt} = \frac{u\frac{dm}{dt}}{m} = \frac{450000}{25000}\ m/s^2 = 18\ m/s^2$$

In units of g, we have $a = \frac{18\ m/s^2}{9.8\ m/s^2}g = 1.84\ g$

(b) From $m\frac{dv}{dt} = u\frac{dm}{dt}$, we have

$$\frac{dm}{m} = \frac{dv}{u}$$

Integrating both sides, we have

$$\int_{m_i}^{m_f}\frac{dm}{m} = \frac{1}{u}\int_0^v dv$$

$$\therefore \ln m_f - \ln m_i = \frac{1}{u}v$$

$$\therefore v = u(\ln m_f - \ln m_i) = u\ln\frac{m_f}{m_i}$$

$$\therefore v = -u\ln\frac{m_i}{m_f}$$

Scanned by CamScanner

With $m_i = 25{,}000$ kg, $\frac{dm}{dt} = 150$ kg/s and for 100–s burn, we have

$$m_f = m_i - \frac{dm}{dt} = (25000 \text{ kg}) - (150 \text{ kg/s})(100\text{s} = 10000 \text{ kg}.$$

$$\therefore v = -u \ln\left(\frac{m_i}{m_f}\right) = -(-300 \text{ m/s}) \ln \frac{25{,}000}{10{,}000} = 2749 \text{ m/s}$$

Example 5.13:

A space ship of mass M is moving with velocity $\bar{U}$ under the action of no external forces. In order to alter its direction of motion, an instantaneous rocket burn takes place, during which gas of mass m is ejected with velocity $\bar{U}+\bar{u}$, the direction of $\bar{u}$ being inclined at an angle θ to the direction $\bar{U}$. Through what angle is the direction of the spaceship deviated?

Solution:

Mass of space-ship before ejecting gas = M

Speed of space-ship before ejecting gas = $\bar{U}$

Mass of spaceship after ejecting gas of mass $m' = M - m$

Suppose that the speed of the spaceship after ejecting gas is $\bar{V}$ and the direction of the spaceship has been turned through an angle φ.

In terms of x- and y- components, we can express $\bar{U}$ and $\bar{V}$ as

$$\bar{U} = \hat{i}U_x, \qquad \bar{u} = \hat{i}u\cos\theta + \hat{j}u\sin\theta, \qquad \bar{V} = \hat{i}V\cos\varphi + \hat{j}V\sin\varphi,$$

Applying the principle of conservation of linear momentum we have,

Total momentum before ejecting gas = Total momentum after ejecting gas.

$$\therefore M\bar{U} = (M-m)\bar{V} + m(\bar{U}+\bar{u})$$

$$\therefore (M-m)\bar{V} = (M-m)\bar{U} - m\bar{u} \qquad \text{(i)}$$

For x-component, equation (i) can be written as

$$(M-m)\,V_x = (M-m)U_x - mu_x$$

$$\therefore (M-m)\,V\cos\varphi = (M-m)U - mu\cos\theta \qquad \text{(ii)}$$

Scanned by CamScanner

For y-component, we have

$$(M-m)V_y = (M-m)U_y - mu_y$$

$$\therefore (M-m)V\sin\varphi = -mu\sin\theta \qquad \text{(iii)}$$

where $U_y = 0$.

Dividing equation (iii) by (ii), we have

$$\tan\varphi = \frac{-mu\sin\theta}{(M-m)U - mu\cos\theta}$$

$$\therefore \varphi = \tan^{-1}\left(\frac{-mu\sin\theta}{(M-m)U - mu\cos\theta}\right)$$

From equation (i),

$$\bar{V} = \bar{U} - \frac{m}{M-m}\bar{u} = U\hat{i} - \frac{m}{M-m}(\hat{i}\,u\cos\theta + \hat{j}\sin\theta)$$

$$= \left(U - \frac{m}{M-m}u\cos\theta\right)\hat{i} - \left(\frac{m}{M-m}u\sin\theta\right)\hat{j}$$

$$\therefore |\bar{V}| = \sqrt{V_x^2 + V_y^2} = \left(U^2 - \frac{2m}{M-m}Uu\cos\theta + \frac{m^2}{(M-m)^2}U^2\right)^{\frac{1}{2}}$$

Example: 5.14

A machine gun fires six bullets per second into a target. The mass of each bullet is 3 g, and the speed 500 m/s. Find the average force required to hold the gun in position. What is the power delivered to the bullets?

Solution: number of bullets n = 6

The bullets are released from rest and so u = 0, Δt = 1s.

$$F_{ave} = \frac{\text{change in momentum}}{\text{time interval}} = n\frac{(mv - mu)}{\Delta t} = 6\frac{(0.003)(500-0)}{1} = 9\,N$$

$$\text{K.E of one bullet} = \frac{1}{2}mv^2 = \frac{1}{2}(0.003)(500)^2 = 375\ J$$

Scanned by CamScanner

For six bullets, we have K.E. = 6(375) = 2250 J

$$\text{Power} = \frac{\text{total energy}}{\text{time}} = \frac{2250}{1} = 2250 \text{ W}$$

Example 5.15

The nucleus of a certain atom has a mass of 3.8×10^{-27} kg and is at rest. The nucleus is radioactive and suddenly ejects from itself a particle of mass 6.6×10^{-27} kg and speed 1.5×10^{7} m/s. Find the recoil speed of the nucleus left behind.

Solution:

Mass of nucleus before breaking $M = 3.8 \times 10^{-25}$ kg

Let its speed before breaking be u. Since it is at rest, u = 0.

Let m_1 be the mass of the particle ejected, and v_1 its velocity and let M_2 be the mass of the nucleus left behind and v_2 its velocity.

So, $m_1 = 6.6 \times 10^{-27}$ kg, $v_1 = 1.5 \times 10^{7}$ m/s.

Mass of the nucleus left behind $M_2 = M - m_1$

$$= 3.8 \times 10^{-25} - 6.6 \times 10^{-27} = 3.73 \times 10^{-25} \text{ kg}$$

Since the total momentum before ejecting particle is equal to the total momentum after ejecting particle, we have

$$\therefore Mu = m_1v_1 + M_2v_2$$

$$0 = (6.6 \times 10^{-27})(1.5 \times 10^{7}) + 3.73 \times 10^{-25} v_2$$

$$\therefore v_2 = -\frac{(6.6 \times 10^{-27})(1.5 \times 10^{7})}{3.73 \times 10^{-25}} = -2.7 \times 10^{5} \text{ m/s.}$$

Scanned by CamScanner

Problems Set 5

1. (a) State the principle of the conservation of linear momentum.
   (b) Show that the linear momentum P and Kinetic Energy K of a mass M are related through $K = \frac{P^2}{2M}$
   (c) An earth Satellite of mass M circles the earth with speed V. By how much does its momentum change

   (i) as it goes half way round the earth?
   (ii) as it goes all the way round? Ignore the earth's rotation.

   Answer (i) 2mv (ii) 0

2. A 5.0 g bullet moving at 100 m/s strikes a log. Assume that the bullet undergoes uniform deceleration and stops in 6.0 cm, find

   (a) the time taken for the bullet to stop,
   (b) the impulse on the log, and
   (c) the average force experienced by the log.

   Answer: (a) 1.2×10^{-3} s (b) 0.5 N.s (c) 417 N

3. An Astronaut is doing maintenance work outside a space station. He is coasting along the station at a speed of 1.00 m/s. He wishes to change his direction of motion by 90° and to increase his speed to 2.00 m/s. His total mass is 100 kg, including his space suit and rocket belt, which provide a thrust of 50 N.

   (a) Find the magnitude and direction of the impulse needed to accomplish the desired change in motion.
   (b) What is the shortest time in which the astronaut can complete the change in motion?
   (c) How must the rocket be pointed?

Scanned by CamScanner

Answers to question 3:

(a) Impulse $\bar{I} = -100\hat{i} + 200\hat{j}$

Magnitude of $I = 224$ N.s

Direction is 116.6° with respect to $\bar{v}_i$.

(b) $t = 4.47$s.

(c) In order to accomplish the desired change in this minimum firing time, the rocket's exhaust must be pointed opposite to I, or at an angle of $-63.4°$ with respect to $\bar{v}_i$.

4. A ball of 0.4-kg mass and a speed of 3 m/s has head-on completely elastic collision with a 0.6-kg mass initially at rest. Find the speed of both bodies after the collision.

Solution:

$m_1 = 0.4$ kg, $u_1 = 3$ m/s, $v_1 = ?$, $m_2 = 0.6$ kg, $u_2 = 0$, $v_2 = ?$

According to the principle of conservation of linear momentum,

$$m_1u_1 + m_2v_2 = m_1v_1 + m_2v_2$$

Substituting, we have

$$0.4(3) + 0.6(0) = 0.4(v_1) + 0.6(v_2) \qquad \text{(i)}$$

Since the collision is completely elastic, the coefficient of restitution $e = 1$:

$$e = \frac{|v_2 - v_1|}{|u_1 - u_2|}$$

$$\therefore 1 = \frac{|v_2 - v_1|}{|3 - 0|} \qquad \text{(ii)}$$

Solving (i) and (ii), we have $v_1 = -0.6$ m/s, $v_2 = 2.4$ m/s.

Scanned by CamScanner

CHAPTER SIX

CIRCULAR MOTION

6.1 Introduction

When an object moves from point A to point B along a straight line, we say the motion is a straight line or **linear motion,** fig. 6.1. The distance s travelled in time t is called **linear distance.** The speed $v = \frac{s}{t}$, is called the **linear speed.**

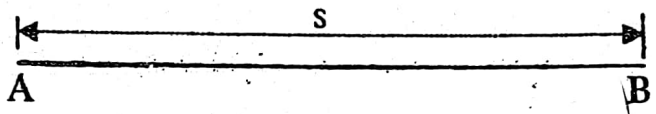

Fig. 6.1

Now, instead of moving in a straight line, the object now moves along the arc of a circle, from A to B, fig. 6.2. It is more convenient to describe the distance travelled in a circular motion by the angle θ through which the radius OA moves. This angle θ is called **angular distance.**

Fig. 6.2

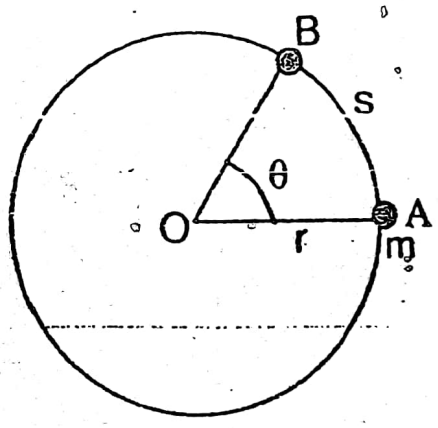

Three units are customarily used to express the angle θ: degrees, revolutions and radians. An angle in radian is defined by the following equation:

$$\text{Angle in radian} = \frac{\text{arc length}}{\text{radius of arc}}$$

$$\theta = \frac{s}{r} \qquad (6.1)$$

$\omega = \frac{\theta}{t}$

Scanned by CamScanner

If the object in fig. 6.2 moves round the circle once, $\theta = 360°$ and the arc length s is equal to the circumference $2\pi r$. Thus substituting $\theta = 360°$, $s = 2\pi r$ in equation (6.1), we have

$$360° = \frac{2\pi r}{r}$$

$$\therefore 360° = 2\pi$$

Also, since 1 rev is the same as 360°, we find at once that

1 rev = 2π rads.

If t is the time taken to move from A to B, then the angular speed ω is

$$\omega = \frac{\theta}{t} \qquad (6.2)$$

6.2 Angular Speed And Velocity.

As a particle moves in a circle, it travels an angular distance θ and a linear distance s.

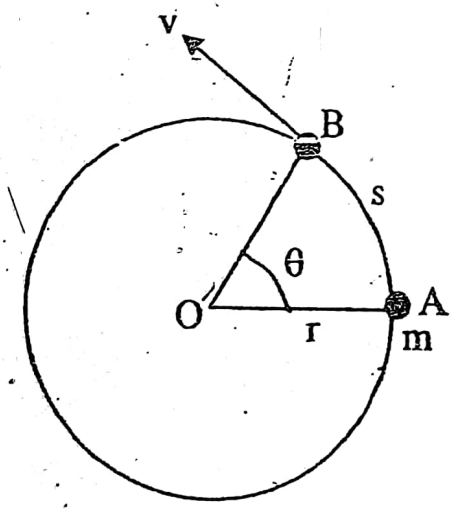

Fig. 6.3

From equation 6.1,

$$s = r\theta$$

Dividing by t, the time taken to move from A to B, we have

$$\frac{s}{t} = r\frac{\theta}{t}$$

Scanned by CamScanner

But $\frac{s}{t}$ = linear velocity v and $\frac{\theta}{t}$ = angular velocity ω.

$\therefore v = r\omega$

This velocity at any particular instant is always tangential to the circle, see fig. 6.3. It is therefore called the tangential velocity v_T of the particle. Thus

$$v_T = r\omega \qquad (6.3)$$

Differentiating both sides of equation (6.3) holding r constant, we have

$$\frac{dv_T}{dt} = r\frac{d\omega}{dt} \qquad (6.4a)$$

The quantity $\frac{dv_T}{dt} = a_T$, which is the rate of change of tangential velocity, is called **tangential acceleration**, while $\frac{d\omega}{dt} = \alpha$, which is the rate of change of angular velocity, is called **angular acceleration**. Thus, equation (6.4a) can be rewritten as:

$$a_T = r\alpha \qquad (6.4b)$$

6.3 Equations of Motion with Uniform Angular Acceleration

Suppose that the angular velocity of an object moving in a circular path with uniform angular acceleration α increases from a value ω_o to a value ω in a time t. Then, from the definition of angular acceleration,

$$\alpha = \frac{\omega - \omega_o}{t},$$

from which we obtain

$$\omega = \omega_o + \alpha t \qquad (6.5)$$

The angular distance θ travelled by the object in the time t is given by

$$\theta = \text{Average angular speed x time} = \frac{(\omega + \omega_o)}{2}t$$

Scanned by CamScanner

But from equation (6.5), $\omega = \omega_o + \alpha t$

$$\therefore \theta = \frac{(\omega_o + \alpha t + \omega_o)t}{2}$$

Or

$$\theta = \omega_o t + \frac{1}{2}\alpha t^2 \qquad (6.6)$$

If we eliminate t by substituting $t = \frac{\omega - \omega_o}{\alpha}$ from (6.5) into equation (6.6), we obtain, on simplifying

$$\omega^2 = \omega^2_o + 2\alpha\theta \qquad (6.7)$$

Example 6. 1:

A wheel is turning at a speed of 2.0 rev/s and is then allowed to coast to rest. If it does so in 30 s, how far did it turn in the process? Assume uniform deceleration to be good approximation.

Solution:

$t = 30$ s, $f_o = 2.0$ rev/s $\qquad \therefore \omega_o = 2\pi f = (2\pi)(2) = 4\pi$ rad/s

Now, $\omega = \omega_o + \alpha t$.

$$\therefore 0 = 4\pi + 30\alpha$$

$$\therefore \alpha = -\frac{4\pi}{30} = \frac{2\pi}{15} \text{ rad/s}^2$$

$$\therefore \theta = \omega_o t + \frac{1}{2}\alpha t^2 = (4\pi)(30) + \frac{1}{2}\left(\frac{-2\pi}{15}\right)(30)^2 = 60\pi \text{ rad}$$

Example 6.2

A vehicle with 50–cm diameter wheels is moving at a speed of 20 m/s.

(a) How fast are its wheels turning?

(b) How many revolutions will the wheels turn if the car coasts uniformly to rest in 30 s?

Scanned by CamScanner

Solution:

The tangential initial speed u_T = 20 m/s, wheel's diameter = 50 cm. Hence wheel's radius r = 25 cm, time t = 30 s.

(a) The initial tangential velocity $u_T = r\omega_o$

$$\therefore \omega_o = \frac{u_T}{r} = \frac{20}{25 \times 10^{-2}} = 80 \text{ rad/s}$$

(b) After time t = 30 s, the wheels come to rest. Hence, final angular velocity $\omega = 0$.

$$\therefore \alpha = \frac{\omega - \omega_o}{t} = \frac{0-80}{30} = -2.67 \text{ rad/s}^2$$

Using $\omega^2 = \omega^2_o + 2\alpha\theta$, we have

$$\theta = \frac{\omega^2 - \omega_0^2}{2\alpha} = \frac{0-80^2}{2(-2.67)} = 1200 \text{ rad}$$

Now, 1 rev = 2π rad.

$$\therefore 1200 \text{ rad} = \frac{1200}{2\pi} = \frac{600}{\pi} \text{rev}$$

6.4 Radial Acceleration

Suppose a particle of mass m is moving round a circle with constant speed v_T, fig. 6.4. The velocity v_T is always tangential to the circle. This means that the direction of v_T at A is different from that at B. The particle is therefore accelerating even though its speed is constant. Let us obtain an expression for this acceleration. From fig. 6.4, we express the coordinates (x, y) of the particles in the form

$$x = r\cos\theta, \quad y = r\sin\theta.$$

But we know that $\theta = \omega t$. Hence,

$$x = r\cos\omega t \qquad (6.8a)$$
$$y = r\sin\omega t \qquad (6.8\ b)$$

Scanned by CamScanner

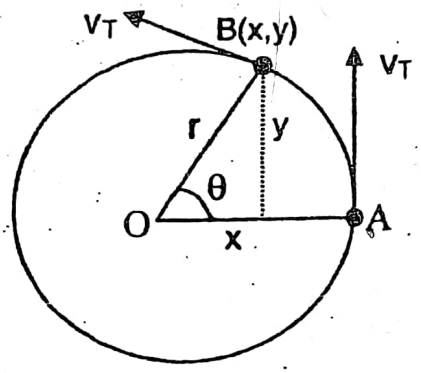

Fig. 6.4

If we differentiate equations (6.8a) and (6.8b) with respect to time t, we get the components of particle's velocity:

$$v_x = \frac{dx}{dt} = -r\omega \sin \omega t \quad \text{.....(6.9a)}$$

$$v_y = \frac{dy}{dt} = r\omega \cos \omega t \quad \text{.....(6.9b)}$$

To find the x and y components of the acceleration, we make use of the fact that

$$a_x = \frac{dv_x}{dt}, \qquad a_y = \frac{dv_y}{dt}.$$

From equations (6.9a) and (6.9b), we have

$$v_x = -r\omega \sin \omega t, \qquad v_y = r\omega \cos \omega t.$$

$$\therefore a_x = \frac{dv_x}{dt} = -\omega^2 r\cos \omega t = -\omega^2 x$$

$$\therefore a_x = -\omega^2 x \quad \text{..... (6.10a)}$$

Similarly,

$$a_y = \frac{dv_y}{dt} = -\omega^2 r\sin \omega t = -\omega^2 y$$

$$\therefore a_y = -\omega^2 y \quad \text{.....(6.10b)}$$

According to equations (6.10a) and (6.10b), the accelerations are proportional to the negative of the displacement:

$$a_x \propto -x, \qquad a_y \propto -y.$$

Scanned by CamScanner

This means that the resultant acceleration vector a_r whose magnitude is given by

$$a_r = \sqrt{a_x^2 + a_y^2} = \sqrt{(-\omega^2 x)^2 + (-\omega^2 y)^2} = \omega^2\sqrt{x^2 + y^2} = \omega^2 r$$

is proportional to the radius vector **r** but opposite in direction. Since the radius vector points from the center of the circle to the particle, the acceleration must point radially inward from the particle to the center of the circle. For this reason, the acceleration is called ***radial acceleration*** or ***centripetal acceleration***. Thus, centripetal acceleration a_r is given by

$$a_r = \omega^2 r$$

In order for a particle of mass m to accelerate, an unbalanced force must act upon it. According to Newton's Second Law, this force is given by F = ma. For motion along a circular path, the acceleration a is the radial acceleration a_r.

$$\therefore F_r = ma_r = m\omega^2 r = \frac{mv^2}{r}$$

This is the force that keeps an object moving round a circular path and is called the **centripetal force.**

Example 6.3

An object of mass 4 kg moves round a circle of radius 100 cm with a constant speed of 30 m/s. Calculate (i) the angular velocity (ii) the force towards the centre.

Solution:

m = 4 kg, r = 100 cm = 100 x 10^{-2} m = 1 m, v = 30 m/s.

(i). $v = r\omega$

$$\therefore \omega = \frac{v}{r} = \frac{30}{1} = 30 \text{ rad/s}$$

(ii) $$F = \frac{mv^2}{r} = \frac{4(30^2)}{1} = 3600 \text{ N}$$

Scanned by CamScanner

Example 6.4

A ball of mass m is rotated at constant speed v in a vertical circle of radius r, as shown in fig. 6.5. Find the tension in the cord when the ball is at position A and at position B.

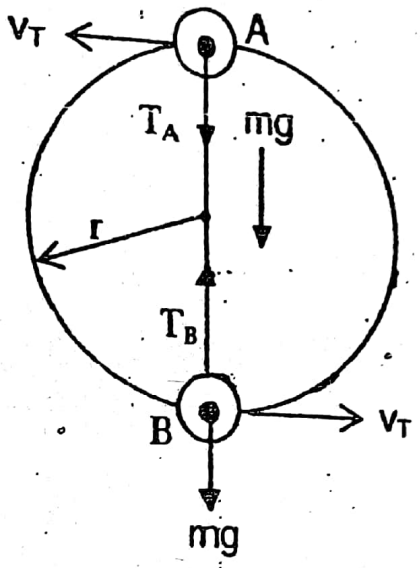

Fig.6.5

Solution:

At point A the weight mg of the particle and the tension T_A in the cord are directed radially inward. The total radial force constitutes the centripetal force:

$$\therefore T_A + mg = \frac{mv^2}{r}$$

or

$$T_A = m\left(\frac{v^2}{r} - g\right)$$

When the ball is at point B, the total radial force is $T_B - mg$. Therefore,

$$T_B - mg = \frac{mv^2}{r}$$

Hence,

$$T_B = m\left(\frac{v^2}{r} + g\right)$$

Scanned by CamScanner

Example 6.5 **: The Conical Pendulum**

A pendulum bob of mass m is attached to a string of length l and made to revolve in a horizontal circle of radius r with speed v. Find the tension in the cord.

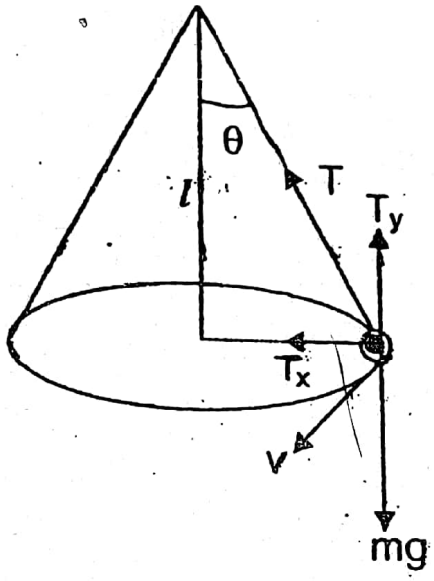

Solution:

The tension T can be resolved into horizontal component T_x given by

$$T_x = T \sin\theta$$

and a vertical component T_y given by

$$T_y = T \cos\theta.$$

To hold the ball in a circular path, the centripetal force needed is

$$F_r = \frac{mv^2}{r}.$$

This radial force is furnished by the horizontal component of T, namely.

$$T_x = T \sin\theta:$$

$$\therefore T\sin\theta = \frac{mv^2}{r} \qquad \text{(i)}$$

Moreover, the vertical component of T, i.e. $T_y = T\cos\theta$, must balance the weight mg, so that

$$T\cos\theta = mg \qquad \text{(ii)}$$

Scanned by CamScanner

Dividing equation (i) by (ii), we get

$$\frac{T\sin\theta}{T\cos\theta} = \frac{mv^2}{r} \times \frac{1}{mg}$$

$$\therefore \tan\theta = \frac{v^2}{rg}. \qquad \text{(iii)}$$

This shows that the angle θ is independent of the mass of the bob. Equation (i) or (ii) can be used to find T.

6.5 Center of Mass

When dealing with a system of particles or with a rigid body, we frequently inquire about the motion of the system as a whole. In such a situation, we use the concept of **center of mass.** The point that corresponds to the center of mass (c.m) is the "effective mass center". This is the point at which, if all the mass of the system or object were to be concentrated, the resulting point-like mass would have the same translational kinematic behaviour as the extended mass system as a whole.

Suppose we have several particles with masses m_1, m_2, m_3 and so on. Let the coordinates of m_1 be (x_1, y_1), those of m_2 be (x_2, y_2), and so on, refer to fig 6.6.

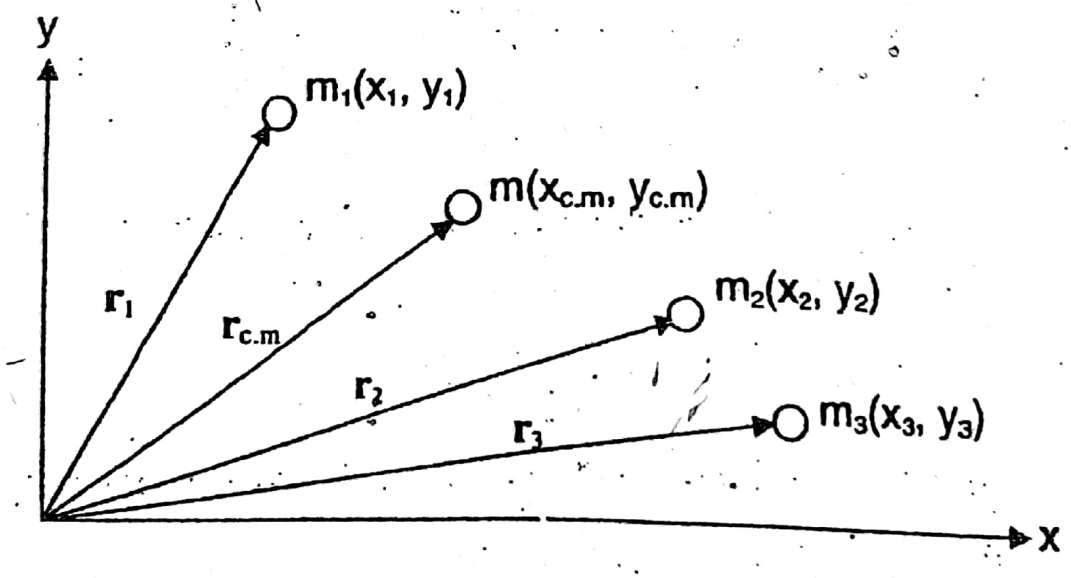

Fig.6.6

Scanned by CamScanner

The center of mass of the system is defined as the point having coordinates (x_{cm}, y_{cm}):

$$x_{cm} = \frac{m_1x_1 + m_2x_2 + m_3x_3 + ...}{m_1 + m_2 + m_3 + ...} = \frac{\sum_i m_i x_i}{\sum_i m_i} \qquad (6.11a)$$

$$y_{cm} = \frac{m_1y_1 + m_2y_2 + m_3y_3 + ...}{m_1 + m_2 + m_3 + ...} = \frac{\sum_i m_i y_i}{\sum_i m_i} \qquad (6.11b)$$

The position vector $r_{c.m}$ of the center mass can be expressed in terms of the position vectors $r_1, r_2, r_3, ...$, of the particles as:

$$r_{c.m} = \frac{m_1r_1 + m_2r_2 + m_3r_3 + ...}{m_1 + m_2 + m_3 + ...} = \frac{\sum_i m_i r_i}{\sum_i m_i} \qquad (6.11c)$$

Example 6.6

Locate the c.m of the set of particles shown in fig. 6.7. The particles are on the corners of a 2–m square.

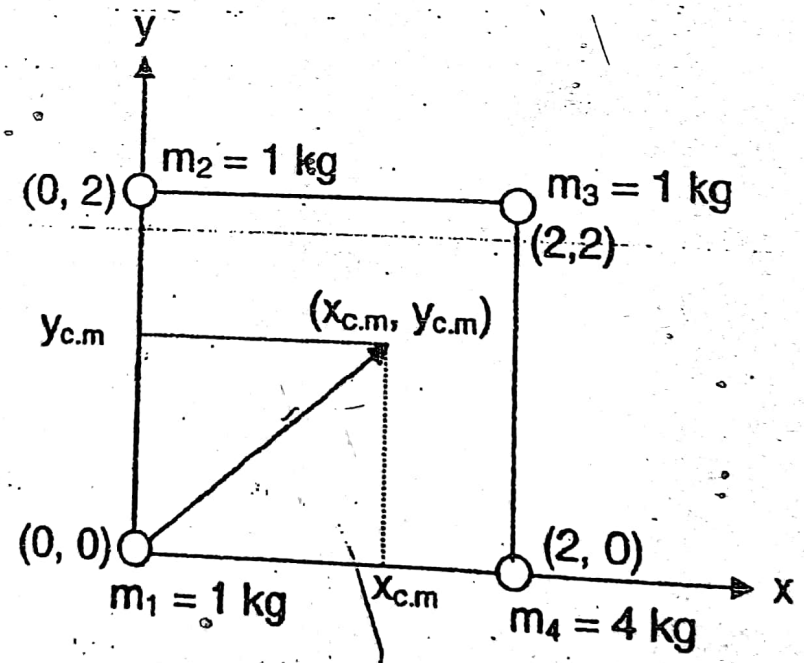

Fig. 6.7

Scanned by CamScanner

Solution:

$$x_{cm} = \frac{m_1x_1 + m_2x_2 + m_3x_3 + m_4x_4}{m_1 + m_2 + m_3 + m_4}$$

$$= \frac{(1)(0)+(1)(0)+(1)(2)+(4)(2)}{1+1+1+4} = \frac{2+8}{7} = 1.42 \text{ m}$$

$$y_{cm} = \frac{m_1y_1 + m_2y_2 + m_3y_3 + m_4x_4}{m_1 + m_2 + m_3 + m_4}$$

$$= \frac{(1)(0)+(1)(2)+(1)(2)+(4)(0)}{1+1+1+4} = \frac{4}{7} = 0.57 \text{ m}$$

The center of mass is $(x_{cm}, y_{cm}) = (1.42 \text{ m}, 0.57)$

6.5.1 Center of Mass for a Solid Object

Equations (6.11a) and (6.11b) give the coordinates of the center of mass for a collection of particles. When the collection consists of a continuous distribution of matter, the sums are replaced by integrals. Therefore if dm represents a differential element of mass, we have

$$r_{c.v} = \frac{\int_m r\,dm}{M}$$

so that

$$x_{c.m} = \frac{1}{M}\int_m x\,dm, \quad y_{c.m} = \frac{1}{M}\int_m y\,dm \quad \text{and} \quad z_{c.m} = \frac{1}{M}\int_m z\,dm.$$

In these formulas, $dm = \rho dxdydz$, where ρ is the volume mass density. For a two-dimensional problem $dm = \sigma\, dx\, dy$, where σ is the surface mass density. For one dimension $dm = \lambda\, dx$, λ is the linear mass density.

Example 6.7

Determine the location of the center of mass of a thin lamina (thin layer) in the shape of an isosceles triangle with a base length a and an altitude b.

Scanned by CamScanner

Solution:

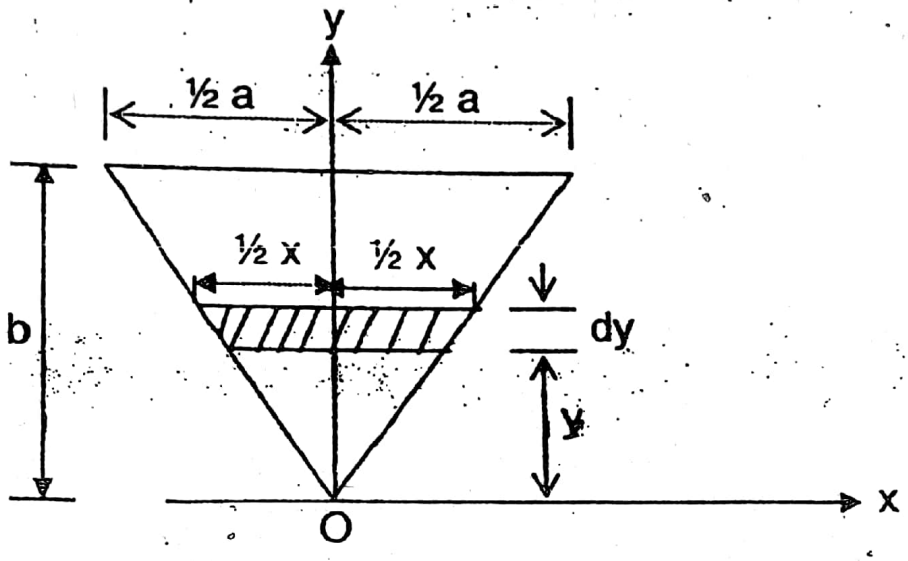

If σ is the surface mass density (i.e. mass per unit area) of the lamina of mass M, then

$$\sigma = \frac{M}{\text{area}} = \frac{M}{\frac{1}{2}ab} = \frac{2M}{ab}$$

Mass of small element = dm = $\sigma x\, dy$.

From the diagram,

$$\frac{x}{a} = \frac{y}{b},$$

$$\therefore x = \frac{a}{b}y$$

$$\therefore dm = \sigma\, x\, dy = \sigma\left(\frac{a}{b}y\right)dy = \frac{2M}{ab}\cdot\frac{a}{b}\, y\, dy = \frac{2M}{b^2}\, y\, dy$$

$$\therefore y_{cm} = \frac{1}{M}\int_0^b y\,dm = \frac{1}{M}\int_0^b y\left(\frac{2M}{b^2}y\,dy\right) = \frac{2}{b^2}\int_0^b y^2 dy = \frac{2}{b^2}\left(\frac{y^3}{3}\right)\Big|_0^b = \frac{2}{3}b$$

From the symmetry of the diagram, $x_{cm} = 0$. The center of mass is therefore

$$(x_{c.m}, y_{c.m}) = (0, \frac{2}{3}b)$$

Scanned by CamScanner

6.6 Motion Of The Center Of Mass

The center of mass of an object or system is important and the laws of motions for it are particularly simple. To see this, consider a system of N tiny masses. The position vector of the center of mass of the system, according to equation (6.11c) is

$$\mathbf{r}_{cm} = \frac{\sum_{i=1}^{N} \mathbf{r}_i m_i}{\sum_{i=1}^{N} m_i}$$

But $\sum_{i=1}^{N} m_i = M$, the total mass of the system.

$$\therefore \mathbf{r}_{cm} = \frac{\sum_{i=1}^{N} \mathbf{r}_i m_i}{M}$$

$$\therefore M\mathbf{r}_{cm} = \sum_{i=1}^{N} \mathbf{r}_i m_i = m_1\mathbf{r}_1 + m_2\mathbf{r}_2 + \ldots\ldots + m_N\mathbf{r}_N$$

Differentiating both sides with respect to time t, we have

$$M\frac{d\mathbf{r}_{cm}}{dt} = m_1\frac{d\mathbf{r}_1}{dt} + m_2\frac{d\mathbf{r}_2}{dt} + \ldots\ldots\ldots \qquad (6.12a)$$

Now, $\frac{d\mathbf{r}_{cm}}{dt} = \mathbf{V}_{cm}$ is the velocity of c.m of the system, $\frac{d\mathbf{r}_1}{dt} = \mathbf{v}_1$ is the velocity of particle 1, $\frac{d\mathbf{r}_2}{dt} = \mathbf{v}_2$ = velocity of particle 2 and so on.

Equation (6.12a) then becomes

$$M\mathbf{V}_{cm} = m_1\mathbf{v}_1 + m_2\mathbf{v}_2 + m_3\mathbf{v}_3 + \ldots\ldots + m_N\mathbf{v}_N \qquad (6.12b)$$

Scanned by CamScanner

But mv = momentum p. Hence equation (6.12b) can be written as

$$P_{cm} = p_1 + p_2 + p_3 + \ldots\ldots\ldots\ldots + p_N = P \qquad (6.12c)$$

That is, ***the linear momentum P of a system of particles is equivalent to that of a hypothetical particle with the entire mass M of the system moving with the velocity of the center of mass.***

Differentiating equation (6.12c) with respect to time, we have

$$\frac{dP}{dt}cm = \sum_i \frac{dP_1}{dt} + \frac{dP_2}{dt} + \ldots\ldots\ldots + \frac{dP_N}{dt} = \sum_i \frac{dP_i}{dt}$$

From Newton's second law,

$$F_i = \frac{dP_i}{dt},$$

i.e. forces acting on particle i = the rate of change of momentum of particle i.

We may classify the multitude of forces acting on each particle as external forces (forces exerted by agents outside the system) and internal forces (forces exerted by the particle on each other). Hence,

$$\therefore F_i = \frac{dP_{cm}}{dt} = F_i^{ext} + \sum_{i \neq j} F_{ij} \qquad (6.13)$$

The sum over the internal forces $\sum_{i \neq j} F_{ij}$ involves the terms

$$F_{12} + F_{13} + F_{14} + \ldots\ldots\ldots\ldots + F_{21} + F_{22} + \ldots\ldots\ldots\ldots + F_{31} + F_{32} + \ldots,$$

where F_{12} is the force exerted on mass m_1 by mass m_2, F_{13} is the force exerted on mass m_1 by mass m_3 and so on. Thus, the sum $\sum_{i \neq j} F_{ij}$ vanishes by cancellation of the forces in pair. The notation $i \neq j$ means i must not be equal to j. For if i = j, it means we are considering the force between a particle and itself, which is not possible.

Scanned by CamScanner

Therefore, equation (6.13) becomes

$$F_i^{ext} = \frac{dP_{cm}}{dt} = \frac{d(MV_{cm})}{dt} = Ma_{cm}$$

$$\therefore F_i^{ext} = Ma_{cm}$$

The center of mass of a system moves like a point particle having the same mass as the system and subject to the same external forces.

6.7 Moments of Inertia

Suppose a rigid body is rotating about a fixed axis O, fig. 6.8. The body is made up of a lot of particles, with masses m_1, m_2, ... at distances r_1, r_2....., respectively, from the axis of rotation. Particle m_1 is distant r_1 from O and moves with speed v_1. Since the body is rigid, the angular velocity ω of every particle about O is the same. Thus, for particle with mass m_1,

$$v_1 = \omega r_1, \qquad K.E_1 = \frac{1}{2}m_1 v_1^2 = \frac{1}{2}m_1 r_1^2 \omega^2.$$

For particle with mass m_2 distant r_2 from O,

$$v_2 = \omega r_2, \qquad K.E_2 = = \frac{1}{2}m_2 v_2^2 = \frac{1}{2}m_2 r_2^2 \omega^2.$$

Similarly, for particle with mass m_3, we have

$$v_3 = \omega r_3 \qquad K.E_3 = \frac{1}{2}m_3 r_3^2 \omega^2$$

and so on.

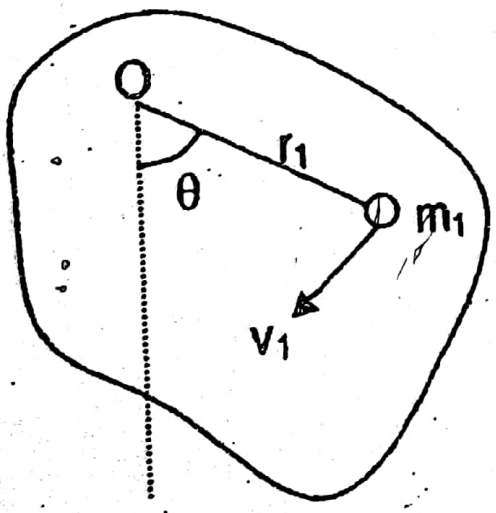

Fig.6.8

Scanned by CamScanner

The total kinetic energy of the body is the sum of the kinetic energy of all its particles:

$$K.E = K.E_1 + K.E_2 + K.E_3 + \ldots\ldots\ldots\ldots$$

$$= \frac{1}{2}m_1r_1^2\omega^2 + \frac{1}{2}m_2r_2^2\omega^2 + \frac{1}{2}m_3r_3^2\omega^2 + \ldots\ldots$$

$$\therefore K.E = \frac{1}{2}\omega^2(m_1r_1^2 + m_2r_2^2 + m_3r_3^2 + \ldots\ldots\ldots\ldots)$$

$$= \frac{1}{2}\omega^2\left(\sum_i m_ir_i^2\right) = \frac{1}{2}\omega^2 I$$

$$\therefore K.E = \frac{1}{2}I\omega^2 \qquad (6.14)$$

The quantity $I = \sum_i m_ir_i^2$ is called the ***moment of inertia*** of the body. The unit of moment of inertia is kg m^2.

Example 6.8

Find the moment of inertia of the system shown in Fig. 6.9 about

(i) the axis PP′

(ii) the axis perpendicular to the point of intersection of the two rods connecting the masses.

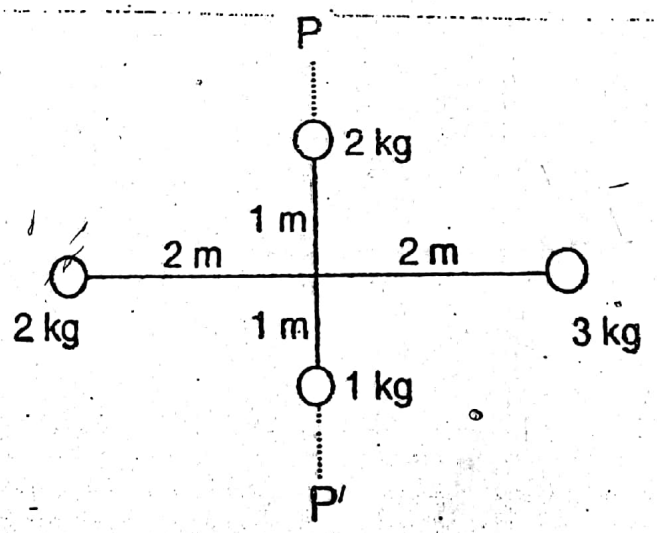

Fig.6.9

Scanned by CamScanner

Solution:

(i) The moment of inertia about PP′ is

$$I = \sum_{i=1}^{4} m_i r_i^2 = m_1 r_1^2 + m_2 r_2^2 + m_3 r_3^2 + m_3 r_4^2$$

$$= (1\ kg)(0)^2 + (3\ kg)(2\ m)^2 + (2\ kg)(0)^2 + (2\ kg)(2\ m)^2$$

$$= (0 + 12 + 0 + 8) kg{\cdot}m^2 = 20\ kg{\cdot}m^2$$

(ii) The moments of inertia about an axis perpendicular to the point of intersection of the rods is

$$I = m_1 r_1^2 + m_2 r_2^2 + m_3 r_3^2 + m_4 r_4^2$$

$$= (1\ kg)(1\ m)^2 + (3\ kg)(2\ m)^2 + (2\ kg)(1m)^2 + (2\ kg)(2\ m)^2$$

$$= (1 + 12 + 2 + 8)\ kg{\cdot}m^2 = 23\ kg{\cdot}m^2.$$

6.8 Moment of Inertia of some objects

1. The Moment of Inertia of a Uniform Rod about an axis through its Center.

Length of the rod = L

Mass of the rod = M

The mass is uniformly distributed along the whole Length of the rod.

$\therefore$ mass per unit length $\lambda = \frac{M}{L}$

Length of small element = dx

$\therefore$ mass of small element $dm = \lambda dx = \frac{M}{L} dx$

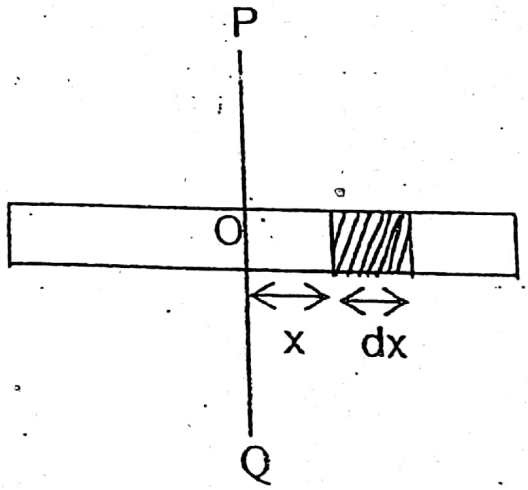

Fig. 6.9

The small element is distant x from the axis passing through the center of the rod.

Scanned by CamScanner

Therefore, the moment of inertia of the small element is

$$dI = dm\, x^2 = \left(\frac{M}{L}dx\right)x^2$$

Integrating both sides we get the moment of inertia for the whole rod about an axis through its center:

$$\int_0^I dI = 2\int_0^{\frac{L}{2}} \frac{M}{L}x^2 dx = \frac{2M}{L}\int_0^{\frac{L}{2}} x^2 dx = \frac{ML^2}{12}$$

$$\therefore I = \frac{ML^2}{12} \qquad (6.15)$$

2. The Moment of Inertia of a Rod about an axis through one end

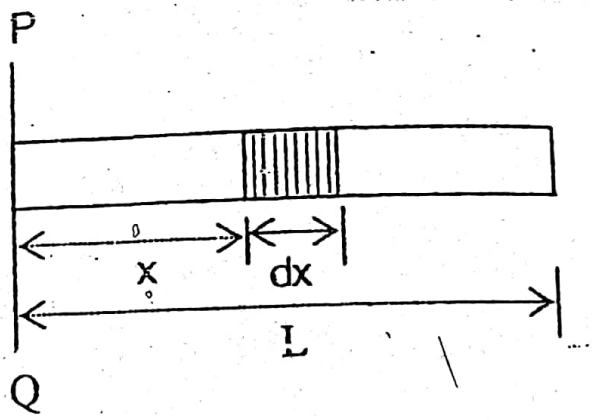

Fig.6.10

Length of the rod = L

Mass of the rod = M

Linear mass density $\lambda = \frac{M}{L}$

Length of small element = dx

$\therefore$ mass of small element $dm = \lambda dx = \frac{M}{L}dx$

The moment of inertia of the small element about an axis through one end, i.e. through PQ, is

$$dI = dm\, x^2 = \left(\frac{M}{L}dx\right)x^2$$

Integrating both sides, we have

$$\therefore I = \int_0^L \frac{dx}{L}Mx^2 = \frac{M}{L}\frac{x^3}{3}\Big|_0^L = \frac{M}{L}\cdot\frac{L^3}{3} = \frac{ML^2}{3}$$

$$I = \frac{ML^2}{3} \qquad (6.16)$$

Scanned by CamScanner

3. The Moment of Inertia of a Ring

Mass of the ring = M

Length of the ring = circumference of the ring = $2\pi r$

The mass of the ring is uniformly distributed along the circumference.

Therefore, the mass per unit length = linear mass density $\lambda = \frac{M}{2\pi r}$

Length of small element = dx

$\therefore$ Mass of small element $dm = \lambda dx = \frac{M}{2\pi r} dx$

Fig. 6.11

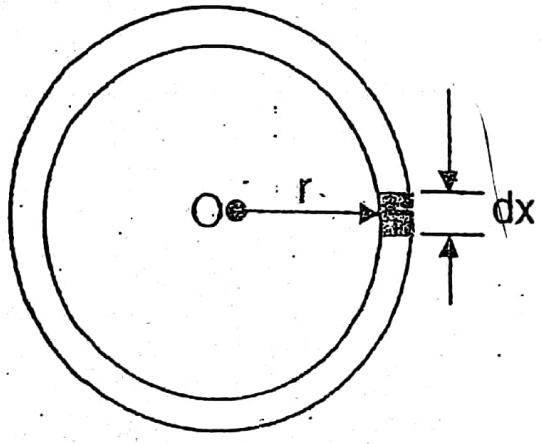

The moment of inertia of the small element about an axis through the center is therefore

$$dI = dm\, r^2 = \frac{M}{2\pi r} dx\, r^2$$

$$\therefore I = \frac{Mr^2}{2\pi r} \int_0^{2\pi r} dx = \frac{Mr}{2\pi} x \Big|_0^{2\pi r}$$

$$= \frac{Mr}{2\pi} \cdot 2\pi r = Mr^2$$

$$\boxed{\therefore I = Mr^2} \qquad (6.17)$$

Scanned by CamScanner

4. The Moment of Inertia of a Circular Disc.

Consider a small circular ring of a disc enclosed between the radii x and x + dx, refer to fig. 6.12

Mass of the disc = M

Area of the disc $A = \pi r^2$

Surface mass density σ = mass per unit area = $\frac{M}{\pi r^2}$

Area of the ring element = $dA = 2\pi x\, dx$

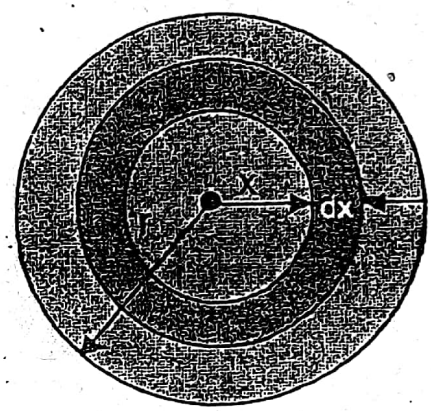

Fig 6.11

Therefore, mass of the ring element dM is

$$dM = \sigma\, dA = \frac{M}{\pi r^2} \cdot 2\pi x\, dx$$

Moment of inertia dI of the ring element is

$$dI = dM\, x^2 = \frac{M}{\pi r^2} \cdot 2\pi x\, dx \cdot x^2 = \frac{2M}{r^2} x^3 dx$$

By integrating both sides, we obtained the moment of inertia of the whole disc:

$$\therefore I = \frac{2M}{r^2}\int_0^r x^3 dx = \frac{Mr^2}{2}$$

Therefore, the moment of inertia of a circular disc is

$$I_{disc} = \frac{Mr^2}{2} \qquad (6.18)$$

5. The Moment of Inertia of a solid cylinder about the axis of symmetry is

$$I = \frac{1}{2}Ma^2 \qquad (6.19)$$

Scanned by CamScanner

6. **The moment of inertia for a solid sphere about an axis through its center.**

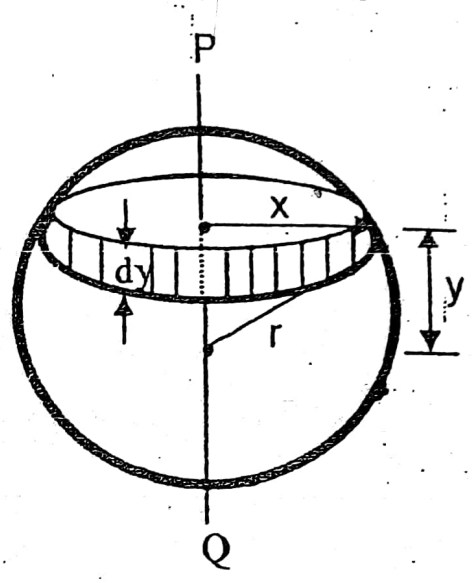

Fig.6.13

Mass of sphere = M
Radius of sphere = r
Mass density ρ = mass per unit volume

$$= M \div \frac{4}{3}\pi r^3 = \frac{3M}{4\pi r^3}$$

In fig. 6.13, small element of the sphere in the form of a disc with thickness dy is taken.

Volume of the disc element = $\pi x^2 dy$
Distance of the disc element from the center is y.
From the figure, $x^2 + y^2 = r^2$. Hence,

$$x^2 = r^2 - y^2.$$

The volume dV of the disc element is therefore

$$dV = \pi x^2 dy = \pi (r^2 - y^2)\, dy$$

Mass of the disc element = volume of the disc multiplied by its density ρ

$$= \pi (r^2 - y^2)\, dy \,.\, \frac{3M}{4\pi r^3} = \frac{3M}{4r^3} (r^2 - y^2)\, dy$$

Now, the moment of inertia of the disc element is, according to equation (6.18),

$$dI = dm \frac{x^2}{2} = \frac{3M}{4r^3} (r^2 - y^2)\, dy \,.\, \frac{x^2}{2}$$

Integrating both sides, we have

$$I = \frac{3M}{8r^3} \int_{-r}^{r} (r^2 - y^2)^2 dy = \frac{2}{5} Mr^2$$

The moment of inertia I of a solid sphere is therefore

$$\boxed{I = \frac{2}{5} Mr^2} \qquad (6.20)$$

Scanned by CamScanner

6.9 Parallel–axis theorem

A body doesn't have just one moment of inertia; it has infinitely many because there are infinitely many axes about which it might rotate. We want to find a simple relationship between the moment of inertia $I_{c.m}$ of a body about an axis through its center of mass and the moment of inertia I_d about any other axis parallel to the one through the center of a mass, but displaced from it by a distance d, refer to fig 6.14.

Fig. 6.14

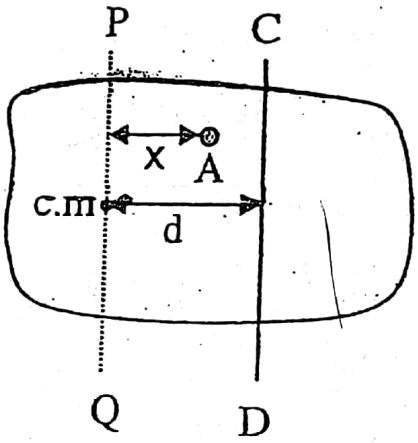

Let I be the moment of inertia of the body about an axis CD and I_{cm} the moment of inertia about an axis PQ through the center of mass distant d from the axis CD, fig. 6.14. Consider a particle A distant x from PQ. If m_i is the mass of the particle, then its moment of inertia dI about CD is

$$dI = m_i(d-x)^2$$

$$\therefore I = \sum m_i(d-x)^2 = \sum m_i d^2 - 2d\sum m_i x + \sum m_i x^2 \qquad (6.21)$$

Now,

$$\sum m_i d^2 = d^2 \sum m_i = d^2 M$$

where, $\sum m_i = M$ is the total mass of the object.

Also $\sum m_i x = 0$, since x is the distance from the c.m and the sum of the moments about the center of mass is zero.

Finally, $\sum m_i x^2 = I_{cm}$, the moment of inertia through the center of mass.

Scanned by CamScanner

Equation (6.21) then becomes

$$I = I_{cm} + Md^2 \tag{6.22}$$

Thus, the ***parallel axis theorem*** states that,

if the moment of the inertia of a body about an axis in some given direction through the center of gravity or center of mass is I_{cm}, then the moment of inertia about any other axis parallel to this is $I_{cm} + Md^2$.

where M is the mass of object and d the distance between the axis.

Example 6.9

Knowing that $I = \frac{2}{5}Mr^2$ for a sphere with axis through its center, find the moment of inertia I for an axis tangent to the sphere.

Solution:

Using the parallel–axis theorem, we have

$$I = I_{cm} + Mr^2 = \frac{2}{5}Mr^2 + Mr^2 = \frac{7}{5}Mr^2$$

6.10 Perpendicular Axes Theorem

Suppose Ox and Oy are two perpendicular axes in the plane of an object and Oz an axis perpendicular to Ox and Oy, refer to fig. 6.15.

Let m_i be the mass of a particle P of the object and (x, y) its coordinate.

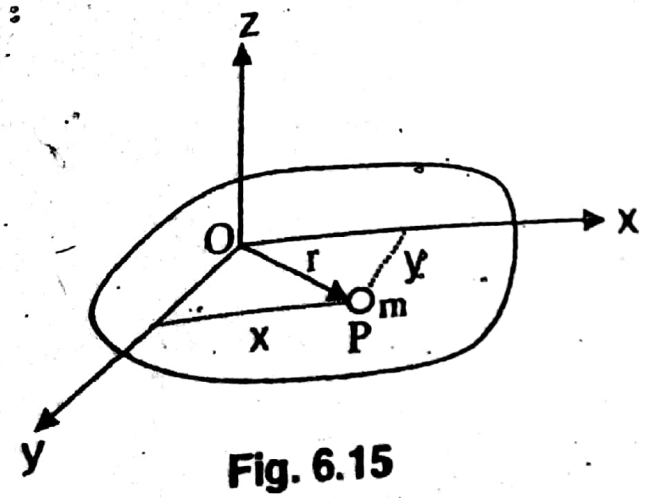

Fig. 6.15

Scanned by CamScanner

The moment of inertia dI of this particle about the axis Oz is

$$dI = m_i r^2$$

But from fig 6.15, $r^2 = x^2 + y^2$.

$$\therefore dI = m_i(x^2 + y^2)$$

$$\therefore I = \sum m_i(x^2 + y^2)$$

$$= \sum m_i x^2 + \sum m_i y^2 = I_x + I_y$$

The perpendicular axes theorem states that

if the moment of inertia of an object for rotation about two perpendicular axes Ox and Oy in its plane are I_x and I_y, then the moment of inertia I about an axis through O at right angles to the plane is $I_x + I_y$.

Example 6.10

Find the moment of inertia of a rectangular lamina of sides l and b about an axis through one corner perpendicular to its plane.

Solution:

The moment of inertia of a rectangular lamina of sides l and b and mass M about the edge of length b is $\frac{1}{3}Ml^2$.

Similarly, the moment of inertia about the length l is $\frac{1}{3}Mb^2$.

Therefore, by the perpendicular axes theorem, the moment of inertia I of the lamina about an axis through one corner perpendicular to its plane is

$$I = I_l + I_b = \frac{1}{3}Ml^2 + \frac{1}{3}Mb^2 = \frac{1}{3}M(l^2 + b^2)$$

6.11 Radius of Gyration

Let the moment of inertia of a given body of mass M about a certain axis be I. Then ***the distance from this axis at which a single particle of the same mass would have the same moment of inertia is called the radius of gyration of the body about the axis.***

Scanned by CamScanner

Denoting the radius of gyration by K, the moment of inertia I of the particle is therefore

$$I = MK^2$$

$$\therefore K = \sqrt{\frac{I}{M}}$$

The radius of gyration is a useful way of indicating how the mass of a body is distributed. For example, the moment of inertia I for a uniform wheel of mass M and radius r is

$$I = \frac{1}{2}Mr^2$$

Since $I = MK^2$, we have

$$\frac{1}{2}Mr^2 = MK^2.$$

Hence, the radius of gyration K will be

$$K = \frac{r}{\sqrt{2}}$$

A value of K = 0.9r for this wheel would indicate that the mass is mostly concentrated near to the rim. However, if K = 0.3r, this would indicate that the mass is mostly concentrated near the center.

6.12 Rotational Dynamics

6.12.1 The Torque Acting On A Particle

In translational motion (i.e. linear motion), force is associated with linea acceleration of a body. In rotational motion, the quantity that is associated with angular acceleration of a body is called the **Torque Γ**.

Scanned by CamScanner

Suppose a force **F** acts on a particle at a point P distant **r** relative to the origin O of an initial reference frame, refer to fig. 6.16.

Fig. 6.16

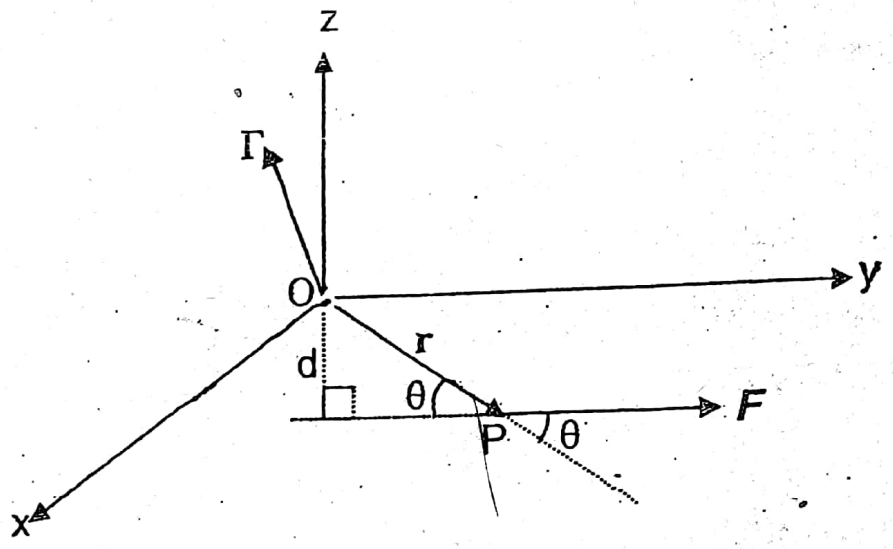

The torque Γ acting on the particle with respect to the origin O is defined as

$$\Gamma = \mathbf{r} \times \mathbf{F} \qquad (6.23)$$

The magnitude of the torque Γ is

$$\Gamma = rF \sin\theta, \qquad (6.24)$$

where θ is the angle between **r** and **F**. The direction of the torque is normal to plane formed by **r** and **F**. In fig. 6.16, the plane formed by **F** and **r** is the x-y plane. Thus, Γ is along the z–axis.

We can rewrite equation (6.24) as

$$\Gamma = (r \sin\theta)\, F = d_{\perp} F \qquad (6.25)$$

where $d_{\perp} = r \sin\theta$ is the perpendicular distance from the line of action of the force, fig. 6.16. We know that the product of force and perpendicular distance is called the *moment of a force*. Thus according to equation (6.25), ***torque is often called the moment of a force.***

Scanned by CamScanner

6.13 The Angular Momentum of a Particle

Linear Momentum is very useful when dealing with linear motion of a particle. In rotational motion, the quantity that is analogous to linear momentum is ***angular momentum*** **L**.

Consider a particle of mass m and linear momentum **P** at position Q distant **r** relative to the origin O of an inertia reference frame, refer to fig. 6.17.

Fig. 6.17

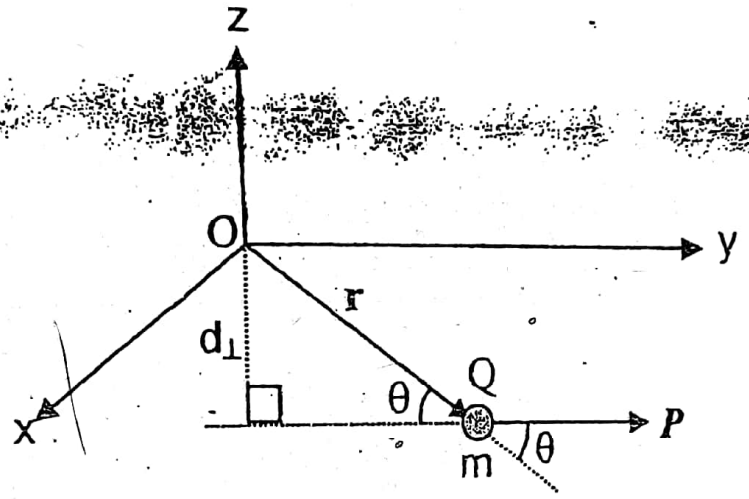

We define the angular momentum **L** of the particle with respect to the origin O to be

$$\mathbf{L} = \mathbf{r} \times \mathbf{P} \qquad (6.26)$$

The magnitude of the angular momentum is

$$L = |\mathbf{L}| = rP\sin\theta \qquad (6.27a)$$

where θ is the angle between **r** and **P**. The direction of **L** is normal to the plane formed by **r** and **P**.

From fig. 6.17, $d_\perp = r\sin\theta$, is the perpendicular distance from the line of action of **P** to O. Hence, equation (6.27a) can written as

$$|\mathbf{L}| = d_\perp P$$

i.e. the magnitude of the angular momentum is equal to the product of linear momentum and the perpendicular distance from the line of action of P. For this reason, ***angular momentum*** is often called ***the moment of linear momentum.***

Scanned by CamScanner

6.14 Relation Between Angular Momentum And Moment Of Inertia.

Consider a particle of mass m moving in a circle of radius r, fig. 6.18. If the velocity of the particle is v then according to equation (6.26), the angular momentum **L** of this particles is

$$\mathbf{L} = \mathbf{r} \times \mathbf{P} = \mathbf{r} \times m\mathbf{v}$$

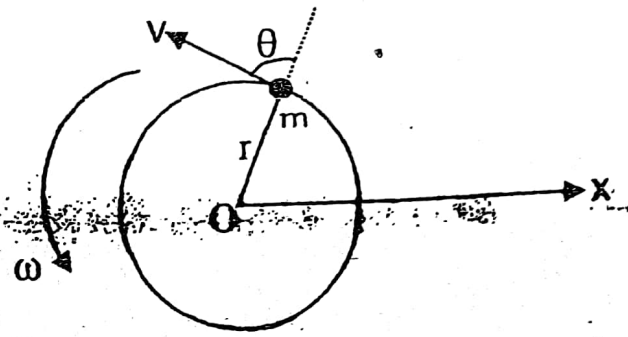

Fig. 6.18

The magnitude of the angular momentum L is

$$L = mr\,v\sin\theta$$

Now, $v\sin\theta = v_T$, is the component of v perpendicular to r; it is the tangential component of v.

$$\therefore L = mrv_T$$

But $v_T = r\omega$

$$\therefore L = mr^2\omega$$

Now, $mr^2 = I$, the moment of inertia of the particle.

$$\boxed{\therefore L = I\omega} \qquad (6.27b)$$

6.15 Relation Between Torque and Angular Momentum

From Newton's Second Law,

$$\mathbf{F} = m\mathbf{a} = m\frac{d\mathbf{v}}{dt} = \frac{d(m\mathbf{v})}{dt}, \quad \text{if m is constant.}$$

$$\therefore \mathbf{F} = \frac{d\mathbf{P}}{dt}$$

Scanned by CamScanner

Taking the vector product of both sides with **r**, we have

$$\mathbf{r} \times \mathbf{F} = \mathbf{r} \times \frac{d\mathbf{P}}{dt}$$

But **r** x **F** = torque Γ:

$$\therefore \ \Gamma = \mathbf{r} \times \frac{d\mathbf{P}}{dt} \qquad (6.28)$$

We know that

$$\mathbf{L} = \mathbf{r} \times \mathbf{P}$$

Differentiating both sides of this equation with respect to time, we have

$$\frac{d\mathbf{L}}{dt} = \frac{d}{dt}(\mathbf{r} \times \mathbf{P}) = \mathbf{r} \times \frac{d\mathbf{P}}{dt} + \frac{d\mathbf{r}}{dt} \times \mathbf{P} = \mathbf{r} \times \frac{d\mathbf{P}}{dt} + \mathbf{v} \times m\mathbf{v}$$

But $\mathbf{v} \times m\mathbf{v} = 0$

$$\therefore \frac{d\mathbf{L}}{dt} = \mathbf{r} \times \frac{d\mathbf{P}}{dt} \qquad (6.29)$$

Comparing equation (6.28) with (6.29), we have

$$\Gamma = \frac{d\mathbf{L}}{dt}$$

*Thus, **the time rate of change of angular momentum of a particle is equal to the torque acting on it.***

If the total external torque acting on a system is Γ_{ext}, then

$$\Gamma_{ext} = \frac{d\mathbf{L}}{dt} \qquad (6.30)$$

From equation (6.27b), L = Iω.

$$\therefore \ \Gamma_{ext} = \frac{d\mathbf{L}}{dt} = \frac{d}{dt}(I\omega) = I\frac{d\omega}{dt} = I\alpha,$$

where α = angular acceleration. Thus

$$\Gamma_{ext} = I\alpha \qquad (6.31)$$

Scanned by CamScanner

6.16 Conservation of Angular Momentum

We know that

$$\Gamma_{ext} = \frac{dL}{dt}.$$

So, if $\Gamma_{ext} = 0$, then $\frac{dL}{dt} = 0$.

If the derivative of a quantity is zero, then the quantity is a constant. Thus, if the external torque $\Gamma_{ext} = 0$, then **L** is constant.

We can therefore state the law of conservation of angular momentum as follows:

If the net external torque acting on a system is zero, then the angular momentum of the system will remain constant.

Example 6.11

A particle with a mass of 500 g rotates in a circular orbit with radius r = 22.4 cm at a constant rate of 1.5 revolutions per second. What is the angular momentum with respect to the center of the orbit?

Solution:

$m = 500\ g = 500 \times 10^{-3}$ kg, $r = 22.4$ cm $= 22.4 \times 10^{-2}$ m,

$\therefore I = mr^2 = 500 \times 10^{-3} \times (22.4 \times 10^{-2})^2 = 2.5 \times 10^{-2}$ kgm^2

$f = 1.5$ rev/s $= 1.5$ Hz.

$\therefore \omega = 2\pi f = 2\pi\,(1.5) = 3\pi$ rad/s.

$\therefore L = I\omega = 2.5 \times 10^{-2}\,(3\pi) = 0.236$ J.s.

Example 6.12

A horizontal disc rotating freely about a vertical axis makes 100 r.p.m. A small piece of wax of mass 10 g falls vertically onto the disc and adheres to it at a distance of 9 cm from the axis. If the number of revolutions per minute is thereby reduced to 90, calculate the moment of inertia of the disc.

Scanned by CamScanner

Solution 6.13

Initial frequency of disc $f_1 = 100$ rev/min $= \frac{100 \text{ rev.}}{60 \text{ s}} = 1.67$ Hz.

$\therefore$ Initial angular speed $\omega_1 = 2\pi f_1, = 2\pi\,(1.67) = 10.47$ rad/ s.

Mass of wax $m_w = 10\,g = 10 \times 10^{-3}$ kg.

When the wax adheres to the disc, its distance from the axis is $r_w = 9 \times 10^{-2}$ m.

New frequency of the disc $f_2 = 90$ rev/min = 1.5 Hz.

$\therefore$ new angular speed $\omega_2 = 2\pi f_2 = 2\pi \times 1.5 = 9.42$ rad/s

The moment of inertia of the wax $I_{wax} = m_{wax} r_w^2 = (10 \times 10^{-3})(9 \times 10^{-2})^2$

$= 8.1 \times 10^{-5}$ kg.m^2

Let the moment of inertia of the disc be I_d.

Then from the principle of conservation of angular momentum,

the total angular momentum of the system before the wax adheres to the disc is equal to the total angular momentum of the system after the wax adheres.

$$I_d\omega_1 = I_d\omega_2 + I_{wax}\omega_2$$

$$I_d\,(\omega_1 - \omega_2) = I_{wax}\,\omega_2$$

$$\therefore I_d = \frac{I_{wax}\,\omega_2}{\omega_1 - \omega_2} = \frac{(8.1 \times 10^{-5})(9.42)}{10.47 - 9.42} = 7.27 \times 10^{-5} \text{ kgm}^2$$

Example 6.14

A massless string is wrapped around a pulley that has a radius R = 10 cm, mass m = 0.50 kg, and a rotational inertia I = 3.2 x 10^{-3} kg·m^2 about its axis. The free end of the string is attached to a hanging 2–kg block; the other end is fixed to a point on the rim of the pulley. Neglecting friction in the pulley bearing, find the linear acceleration of the hanging block.

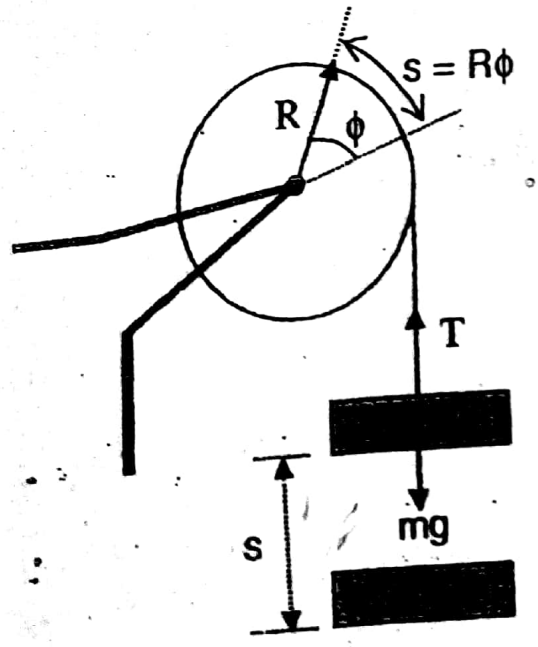

Scanned by CamScanner

Solution

We assume that the string does not stretch, so the distance s that the block descends is equal to the arc length $R\phi$ through which the rim of the pulley moves.

$$\therefore s = R\phi \qquad \text{(i)}$$

Differentiating eq. (i) with respect to t, we have;

$$\frac{ds}{dt} = R\frac{d\varphi}{dt}$$

$$\therefore v = R\omega \qquad \text{(ii)}$$

$$\therefore \frac{dv}{dt} = a = R\frac{d\omega}{dt} = R\alpha$$

$$\therefore a = R\alpha \qquad \text{(iii)}$$

Applying Newton's Second Law to the motion of the block (with the positive direction taken downward), we have

$$mg - T = ma \qquad \text{(iv)}$$

Now the torque Γ is

$$\Gamma = TR \sin 90^\circ = TR \qquad \text{(v)}$$

But $\Gamma = I\alpha$, and $\alpha = \frac{a}{R}$, from eqn. (iii).

$$\therefore TR = I\alpha = I\frac{a}{R}$$

$$TR = \frac{Ia}{R} \qquad \text{(vi)}$$

Eliminating T between equations (iv) and (vi), we have

$$mR^2a + Ia = mgR^2$$

$$\therefore a = \frac{mgR^2}{mR^2 + I} = \frac{g}{1 + \frac{I}{mR^2}} = \frac{9.8}{1 + \frac{(3.2\times10^{-3})}{2(0.10)^2}} = 8.45\ m/s^2$$

Scanned by CamScanner

Example 6.15

A student sits on a stool that is free to rotate about a vertical axis. He holds his arms extended horizontally, with a 3.6-kg dumbbell in each hand. The instructor sets him rotating with an angular speed of 0.50 rev/s. Assume that friction is negligible and exerts no torque about the vertical axis of rotation. Assume also that the rotational inertia of the student plus stool remains constant at 5.4 kgm^2 as he pulls his hands to his sides and that the change in rotational inertia is due only to pulling the masses in. Take the original distance of the weights from the axis of rotation to be 91 cm and their final distance 15 cm. (a) Find the initial angular momentum of the system. (b) What is the final angular velocity of the student?

Solution: $f_1 = 0.5$ rev/s $= 0.5$ Hz. $\therefore \omega_1 = 2\pi f_1 = 2\pi(0.5) = \pi$

The moment of inertia of the student and the stool $I_{ss} = 5.4$ kgm^2.
Mass of each dumbbell m = 3.6 kg.
Moment of inertia I_1 of the dumbbells when arms are extended is

$$I_1 = 2mr_1^2 = 2(3.6)(0.91)^2 = 5.96 \text{ kgm}^2$$

The moment of inertia I_2 of the dumbbells when arms are dropped is

$$I_2 = 2m\,r_2^2 = 2\,(3.6)(0.15)^2 = 0.162 \text{ kgm}^2$$

The initial angular momentum L_i of the system is equal to the angular momentum of the student and the stool plus the angular momentum of dumbbells when arms are extended:

$$L_i = I_{ss}\omega_i + I_1\,\omega_1 = (5.4)(\pi) + (5.96)(2\pi) = 11.36\pi \text{ kg·m}^2/\text{s}$$

(b) Let the final angular velocity be ω_2. The conservation of angular momentum requires that the total Angular Momentum L_i of the system when arms are extended (initial angular momentum) is equal to the total angular momentum L_f of the system when arms are dropped (final angular momentum):

$$L_i = L_f$$

$$\therefore (I_{stud} + I_1)\,\omega_1 = (I_{stud} + I_2)\,\omega_2$$

$$\therefore \omega_2 = \frac{(I_{stud} + I_1)\omega_1}{I_{stud} + I_2} = \frac{(5.4+5.96)\pi}{5.4+0.162} = 2.1\pi \text{ rad/s}$$

Scanned by CamScanner

6.17 Rotational Kinetic Energy

A rotating rigid body consisting of tiny masses such as m_1, m_2, m_3, - - - -, has Kinetic Energy $K.E_{rot}$ given by:

$$K.E_{rot} = \frac{1}{2}m_1 v_1^2 + \frac{1}{2}m_2 v_2^2 + \frac{1}{2}m_3 v_3^2 + \ldots\ldots\ldots\ldots$$

$$= \frac{1}{2}m_1 r_1^2 \omega^2 + \frac{1}{2}m_2 r_2^2 \omega^2 + \ldots\ldots\ldots\ldots\ldots\ldots = \frac{1}{2}\left(\Sigma m_1 r_1^2\right)\omega^2 = \frac{1}{2}I\omega^2$$

where $I = \Sigma m_i r_i^2$ is called the moment of inertia of the body about the given axis.

Example 6.16

A thin ring of mass 2.7 kg and radius 8 cm rotates about an axis through its center and perpendicular to the plane of the ring at 1.5 rev/s. Calculate the kinetic energy of the ring.

Solution:

Mass of the ring m = 2.7 kg

Radius of the ring r = 8 cm = 8×10^{-2} m.

$\therefore$ moment of inertia of the ring $I = mr^2 = (2.7)(8\times10^{-2})^2 = 0.0173$ kg.m^2

Frequency f = 1.5 HZ.

$\therefore \omega = 2\pi f = 2\pi(1.5)$ rad/s $= 3\pi$ rad/s.

$\therefore K.E = \frac{1}{2}I\omega^2 = \frac{1}{2}(0.0173)(3\pi)^2 = 0.767$ J

6.18 Work And Power In Terms Of Torque

Suppose a tangential force F_{tan} acts at the rim of a pivoted wheel of radius R, fig. 6.19. During a time interval dt, the wheel rotates through an infinitesimal angle $d\theta$ about a fixed axis O.

Scanned by CamScanner

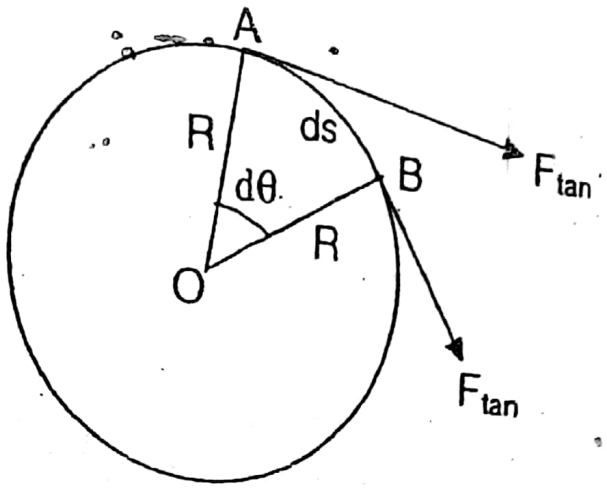

Fig. 6.19

Length of the arc AB = ds

The work dW done by the force F_{tan} is

$$dW = F_{tan}\, ds.$$

If θ is measured in radians,

$$ds = R d\theta$$

$$\therefore dW = F_{tan}\, ds = F_{tan}\, R\, d\theta$$

But F_{tan} R is the torque Γ due to the force F_{tan}.

Thus,

$$dW = \Gamma d\theta \qquad (6.32)$$

The total work W done by the torque during an angular displacement from θ_1 to θ_2 is

$$W = \int_{\theta_1}^{\theta_2} \Gamma\, d\theta \qquad (6.33)$$

If the torque Γ is constant, then

$$W = \Gamma(\theta_2 - \theta_1) = \Gamma \Delta\theta \qquad (6.34)$$

If we divide both sides of equation (6.34) by dt, we have

$$\frac{dW}{dt} = \Gamma \frac{d\theta}{dt} = \Gamma\omega$$

But $\frac{dW}{dt}$ = rate of doing work = power P.

$$\therefore P = \Gamma\omega \qquad (6.35)$$

Scanned by CamScanner

Power
to convert from horse power power to watt
(hp to watt) multiply by 746
1 hp → 746 watt

1 Kilowatt → 1000 watt.
from kw to watt we multiply by 1000

Example 6.17

A small motor delivers 0.20 hp when its shaft is turning at 1400 rev/min. How large a torque is it capable of providing?

Solution:

Power P = 0.20 hp = 0.2 x 746 Watts = 149.2 W

$$f = 1400 \text{ rev/min} = 1400 \frac{\text{rev}}{60\text{s}} = 23.33 \text{ Hz}$$

$$T = \frac{P}{\omega}$$

$$\omega = 2\pi f = 2 \times 3.14 \times 23.33 = 147 \text{ rad/s.}$$

Now, power $P = \Gamma\omega$

$$\therefore \Gamma = \frac{P}{\omega} = \frac{149.2}{147} = 1.02 \text{ N.m}$$

Example 6.18

An electric motor exerts a constant torque of Γ = 10 N.m on a grindstone mounted on its shaft; the moment of inertia of the grindstone is I = 2.0 kg.m^2. If the system starts from rest,

(i) find the work done by the motor in 8.0 s and the kinetic energy at the end of this time.

(ii) What is the average power delivered by the motor?

Solution:

(i) Γ = 10 N.m

The moment of inertia of the grindstone I = 2.0 kg.m^2. The system starts from rest, so $\omega_o = 0$.

The angular distance θ travelled is given by

$$\theta = \omega_o t + \frac{1}{2}\alpha t^2. \qquad \text{(i)}$$

Scanned by CamScanner

From $\Gamma = I\alpha$, we have

$$\therefore \alpha = \frac{\Gamma}{I} = \frac{10}{2} = 5 \text{ rad/s}^2.$$

Substituting $\alpha = 5$ rad/s and $t = 8$ s in equation (i), we have

$$\theta = 0 + \frac{1}{2}(5)(8^2) = 160 \text{ rad}$$

$$\therefore \text{Work done } W = \Gamma\theta = 10(160) = 1600 \text{ J}$$

To get the rotational kinetic energy, we first compute the final angular velocity ω:

$$\omega = \omega_o + \alpha t = 0 + (5)(8) = 40 \text{ rad/s}$$

Therefore, the kinetic energy K.E of rotation $K.E_{rot}$ is

$$K.E_{rot} = \frac{1}{2}I\omega^2 = \frac{1}{2}(2.0)(40)^2 = 1600 \text{ J}$$

(ii) The average power is the total work divided by the time interval:

$$P_{av} = \frac{1600\text{J}}{8\text{s}} = 200 \text{ W}$$

Scanned by CamScanner

Summary of Equations Involved In Linear and Rotational Motions

The equations for linear and angular motions are summarized in the following table:

	Linear Quantity	Corresponding Angular Quantity
1.	Linear distance s	Angular distance θ
2.	Linear velocity $v = \frac{ds}{dt}$	Angular velocity $\omega = \frac{d\theta}{dt}$
3.	Linear acceleration $a = \frac{dv}{dt}$	Angular acceleration $\alpha = \frac{d\omega}{dt}$
4.	Mass of an object m	Moment of inertia I of an object about an axis, $I = mr^2$
5.	Newton's second law: force $F = ma$	Torque $\Gamma = I\alpha$
	Equations For Uniformly Accelerated Motion	
	(i) $v = u + at$	$\omega = \omega_o + \alpha t$
	(ii) $s = ut + \frac{1}{2} a t^2$	$\theta = \omega_o t + \frac{1}{2} \alpha t^2$
	(iii) $v^2 = u^2 + 2as$	$\omega^2 = \omega_o^2 + 2\alpha\theta$
6.	Linear Momentum $P = mv$	Angular Momentum $L = I\omega$
7.	Work W = Force x distance $= Fs$	Work = torque x angular distance $= \Gamma\theta$
8.	Kinetic Energy $K.E = \frac{1}{2}mv^2$	Rotational Kinetic Energy $K.E_{rot} = \frac{1}{2}I\omega^2$
9.	Impulse $Ft = mv - mu$ = change in linear Momentum	Angular Impulse $\Gamma t = I\omega - I\omega_o$ = change in angular momentum.

Scanned by CamScanner

Problems Set 6:

1. A wheel turns with a constant angular acceleration of 0.520 rad/s^2.
   (a) How much time does it take to reach an angular velocity of 8.00 rad/s, starting from rest?
   (b) Through how many revolutions does the wheel turn in this time interval? **Answer: (a) 15.4 s (b) 9.79 rev**

2. A wheel rotates with a constant angular velocity of 12.0 rad/s.
   (a) Compute the radial acceleration of a point 0.500 m from the axis from the relation $a = \omega^2 r$.
   (b) Find the tangential speed of the point, and compute its radial acceleration from the relation $a_{rad} = \frac{v^2}{r}$.

   Answer: (a) 72.0 m/s^2 (b) 6.0 m/s, 72.0 m/s^2

3. Four small spheres, each of mass 0.200 kg, are arranged and connected by light rods, fig. 6.17. Find the moment of inertia of the system about an axis
   (a) through the center of the square, perpendicular to its plane (an axis through point O in the figure);
   (b) bisecting two opposite sides of the square (an axis along line AB in the figure). **Answer: (a) 0.0640 kg.m^2 (b) 0.0320 kg.m^2**

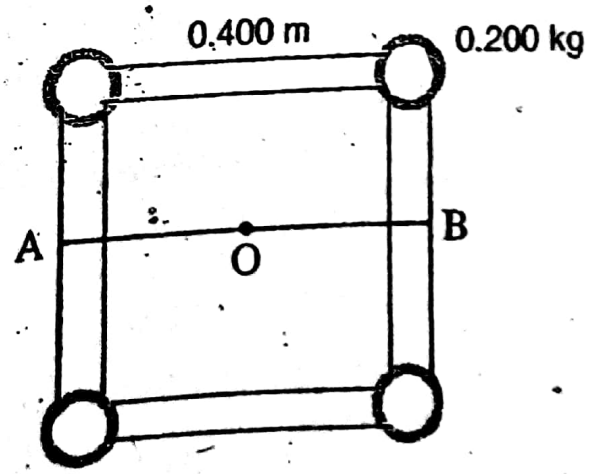

Fig. 6.17

Scanned by CamScanner

4. A wagon wheel is constructed as in Fig. 6.18. The radius of the wheel is 0.300 m, and the rim has a mass of 1.40 kg. Each of the eight spokes, that lies along a diameter and are 0.300 m long, has mass 0.280 kg. What is the moment of inertia of the wheel about an axis through its center and perpendicular to the plane of the wheel?

Solution:

Mass of the rim of wheel M = 1.40 kg

Radius of wheel = 0.300 m

Length of each spoke L = 0.300 m

Mass of each spoke m = 0.280 kg

The moment of inertia I of the wheel about an axis through its centre and perpendicular to the plane of the wheel is given by the sum of the moment of inertia of the rim and the moment of inertia of all the spokes:

$$I = Mr^2 + 8\left(\frac{1}{3}mL^2\right)$$

$$I = 1.40(0.3^2) + 8\left(\frac{1}{3}(0,280)(0.3000)^2\right) = 0.193 \text{ kg.m}^2$$

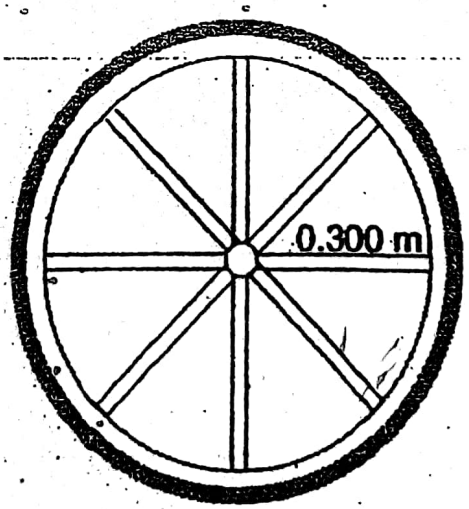

Fig. 6.18

Scanned by CamScanner

5. A roller in a printing press turns through an angle $\theta(t)$ given by

$$\theta(t) = rt^2 - \beta t^3,$$

where $r = 2.50$ rad/s^2 and $\beta = 0.400$ rad/s^3.

(a) Calculate the angular velocity of the roller as a function of time.
(b) Calculate the angular acceleration of the roller as a function of time.
(c) What is the maximum positive angular velocity, and at what value of t does it occur?

Answer:

(a) $2rt - 3\beta t^2$
(b) $2r - 6\beta t$
(c) 5.21 rad/s, 2.08 s.

6. A certain 8–kg wheel has a radius of gyration of 25 cm. What is its moment of inertia? How large a torque is required to give it an angular acceleration of 3 rad/s^2. **Answer: 0.50 kg.m^2, 1.5 N.m.**

7. A heavy wheel of radius 20 cm is mounted on a horizontal axis. A rope wrapped around its rim is pulled straight downward with a constant force of 50 N. The rope moves a distance of 50 cm in 1.0 s.

(a) What is the angular acceleration of the wheel?
(b) What is the moment of inertia of the wheel?
(c) The wheel is a homogeneous solid disk. What is its mass?

8. Energy is to be stored in a 70.0-kg flywheel in the shape of a uniform solid disk with radius R = 1.20 m. To prevent structural failure of the flywheel, the maximum allowed radial acceleration of a on its rim is 3500 m/s^2. What is the maximum kinetic energy that can be stored in the flywheel?

Answer: 7.35×10^4 J

Scanned by CamScanner

CHAPTER 7

GRAVITATION

7.1 Planetary Motion

Newton's Law of Gravitation

Sir Isaac Newton discovered the Law of Gravitation while he was studying the motions of the planets around the sun. Newton's Law of Universal Gravitation states that:

the force of attraction between two given masses is proportional to the product of the masses and inversely proportional to the square of the distance between them.

Fig. 7.1

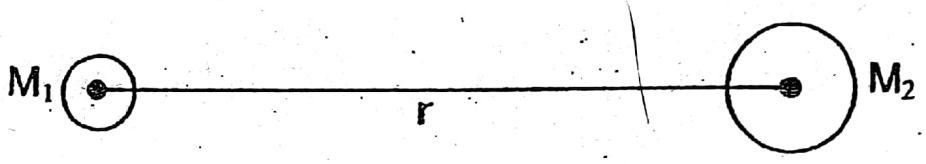

Translating this law into an equation, we have

$$F \alpha \frac{M_1 M_2}{r^2}$$

$$\therefore F = \frac{GM_1 M_2}{r^2} \qquad (7.1)$$

where G is the constant of proportionality and is called gravitational constant. The value of G is 6.673×10^{-11} N.m²/kg².

Example 7.1

Calculate the force of attraction between two 90-kg spheres of metal spaced so that their centers are 40 cm apart.

Solution:

$$F = \frac{GM_1 M_2}{r^2} = (6.67 \times 10^{-11}) \frac{(90)(90)}{(0.40)^2} = 3.38 \times 10^{-6} N$$

Scanned by CamScanner

7.2. The Mass of the Earth

Consider the earth of mass M_e, and an object with mass m on its surface. The force of attraction between the earth and the object, by Newton's Law of gravitation, is

$$F = \frac{GM_e m}{r_e^2}, \qquad (7.2a)$$

where r_e is the radius of the earth; r_e is also the separation between the earth and the object, Fig. 7.2. It is assumed that the mass of the earth is concentrated at its center.

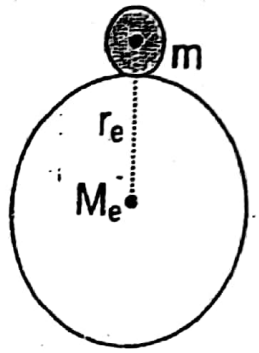

Fig. 7.2

This force of attraction is equal to the gravitational attraction of the earth on the object, and is also equal to the weight of the object:

$$F = mg \qquad (7.2b)$$

where g is the acceleration due to gravity.

Equating (7.2a) and (7.2b) we have

$$\frac{GM_e m}{r^2} = mg$$

$$\therefore M_e = \frac{gr_e^2}{G} \qquad (7.3)$$

Example: 7.2

Compute the mass of the earth, assuming it to be a sphere of radius 6370 km.

Scanned by CamScanner

Solution:

Using equation (7.3), we have

$$M_e = \frac{gr_e^2}{G} = \frac{9.8 \times (6.37 \times 10^6)^2}{6.67 \times 10^{-11}} = 6.0 \times 10^{24} \text{ kg}$$

7.3 Variation of g with Height

The acceleration due to gravity g varies with altitude, that is to say it varies with distance from the center of the earth. To see how g varies with distance r from the center of the earth, consider an object of mass m at a distance r from the center the earth. Using equations (7.1), we have

$$F = \frac{GM_e m}{r^2} \qquad (7.4a)$$

Differentiating both sides with respect to r, we have

$$dF = -\frac{2GM_e m}{r^3} dr \qquad (7.4b)$$

Dividing equation (7.4b) by (7.4a), we have

$$\frac{dF}{F} = -2\frac{dr}{r} \qquad (7.5)$$

Also,

$$F = mg \qquad (7.6)$$

Differentiating (7.6), we have

$$dF = m\,dg \qquad (7.7)$$

Dividing equation (7.7) by (7.6), we have

$$\frac{dF}{F} = \frac{dg}{g} \qquad (7.8)$$

Equating equation (7.5) with (7.8), we have

$$-2\frac{dr}{r} = \frac{dg}{g} \qquad (7.9)$$

Scanned by CamScanner

Equation (7.9) is valid if the distance above the earth's surface is very small. For example, in going up a distance of 16 km from the earth's surface, r changes from about 6400 km to (6400 km + 16 km). Thus,

$$\frac{dr}{r} = \frac{16\text{ km}}{6400\text{ km}} = \frac{1}{400}.$$

From equation (7.9),

$$\frac{dg}{g} = -2\frac{dr}{r} = -2 \times \frac{1}{400} = \frac{-1}{200}$$

$$\therefore\ dg = \frac{-1}{200}g$$

$$= \frac{-1}{200}(980\text{ cm/s}^2) = 4.8\text{ cm/s}^2$$

So, in going up 16 km from the earth's surface, g changes from about 980 cm/s^2 to (980 – 4.8) cm/s^2 = 975 cm/s^2. For situations involving large distances above the earth's surface, see example 7.3 below.

Example 7.3

At what altitude above the earth's surface would the acceleration due to gravity be 4.9 m/s^2? The mass of the earth is 6.0×10^{24} kg and its mean radius is 6.4×10^6 m.

Solution:

At the earth's surface, the weight of an object of mass m is equal to the force of attraction of the earth on it. Hence,

$$mg_e = \frac{GM_e m}{r_e^2},$$

where M_e is the mass of the earth and r_e its radius. Hence

$$g_e = \frac{GM_e}{r_e^2} \qquad \text{(i)}$$

Scanned by CamScanner

Substituting $M_e = 6.0 \times 10^{24}$ kg, $r_e = 6.4 \times 10^6$m and $G = 6.67 \times 10^{-11}$ Nm^2/kg^2, we have

$$g_e = \frac{(6.67\times10^{-11})(6.0\times10^{24})}{(6.4\times10^6)^2} = 9.8 \ m/s^2$$

At a height h above the earth surface, the acceleration due to gravity g_h is

$$g_h = \frac{GM_e}{(r_e+h)^2} \qquad \text{(ii)}$$

Dividing equation (ii) by (i), we have

$$\frac{g_h}{g_e} = \frac{GM_e}{(r_e+h)^2} \times \frac{r_e^2}{GM_e} = \frac{r_e^2}{(r_e+h)^2}$$

$$\therefore \frac{g_h}{g_e} = \frac{r_e^2}{(r_e+h)^2} \Rightarrow (r_e+h)^2 = \frac{g_e r_e^2}{g_h}$$

$$\therefore r_e + h = r_e\sqrt{\frac{g_e}{g_h}}$$

$$\therefore h = r_e\left(\sqrt{\frac{g_e}{g_h}} - 1\right) = 6.4 \times 10^6\left(\sqrt{\frac{9.8}{4.9}} - 1\right) = 2.6 \times 10^6 m$$

Example 7.4

A spherical hollow is made in a lead sphere of radius R, such that its surface touches the outside surface of the lead sphere and passes through its center. The mass of the sphere before hollowing was M. With what force, according to the Law of Universal Gravitation, will the lead sphere attract a small sphere of mass m, which lies at a distance d from the center of the lead sphere on the straight line connecting the centers of the spheres and of the hollow?

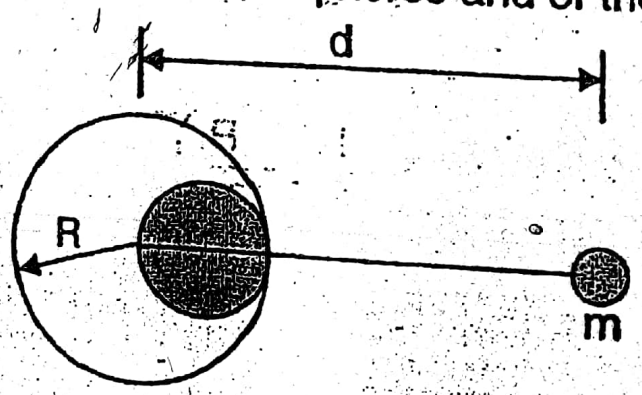

Fig. 7.3

Scanned by CamScanner

Solution:

Mass of lead sphere = M, its radius = R.

Therefore, the volume of the lead sphere $V = \frac{4}{3}\pi R^3$,

and the density of the lead sphere $\rho = \frac{M}{V} = \frac{3M}{4\pi R^3}$.

The entire original sphere would exert a force F' given by

$$F' = \frac{GMm}{d^2}$$

Now the radius of the cut-out sphere $R_c = \frac{R}{2}$.

This implies that the volume of the cut-out sphere $V_c = \frac{4}{3}\pi\left(\frac{R}{2}\right)^3$.

So, the mass m' of the cut-out sphere is

$$m' = \rho V_c = \frac{3M}{4\pi R^3} \times \frac{4}{3}\pi\left(\frac{R}{2}\right)^3 = \frac{M}{8}$$

The cut-out sphere would exert a force F'' given by

$$F'' = G\frac{m'm}{\left(d-\frac{R}{2}\right)^2} = G\frac{\left(\frac{M}{8}\right)m}{\left(d-\frac{R}{2}\right)^2}$$

The effective force F on m is therefore

$$F = F' - F'' = \frac{GMm}{d^2}\left[1 - \frac{1}{8}\left(1-\frac{R}{2d}\right)^{-2}\right]$$

Scanned by CamScanner

7.4 The Motions of Planets and Satellite

According to astronomical history, it was Pythagoras (530 BC) who said, "The world is round and hangs in space". "The earth", he said, does not stand still but revolves around a central fire, called Hestia. This fire is not the sun, for the sun is illuminated, as are the planets, by reflection from Hestia".

Pythagoras, a Greek philosopher and mathematician, was born on the island of Samos. He established a movement in the 6th–century B.C southern Italy that emphasized the study of mathematics as a means to understanding all relationships in the natural world. The followers of this movement, Pythagoreans, were the first to teach that the earth is a sphere revolving around the sun.

Pythagoras

Pythagoras's idea lay dormant for 2000 years before Copernicus, at the beginning of the 16th century said, "the sun stands still and the earth and planets move in orbits around it".

Copernicus, Nicolaus (1473-1543), Polish astronomer, was born on February 19, 1473, in Thorn (now Torun), Poland; to a family of merchants and municipal officials. He postulated the astronomical theory that the sun is at rest near the center of the universe, and that the earth, spinning on its axis once daily, revolves annually around the sun. This is called the heliocentric, or sun-centered, system.

Copernicus

The observational and mathematical proof that all the planets move in elliptical orbits was first presented by Johannes Kepler in 1609. He stated three Laws, which are now known as Kepler's Laws of Planetary Motion.

Scanned by CamScanner

Kepler, Johannes (1571-1630), German astronomer and natural philosopher, was born on December 27, 1571, in Well der Stadt in Wurttemberg. He was noted for formulating and verifying the three laws of planetary motion. He believed that the Copernican heliocentric view of the solar system was correct. Kepler formulated an accurate mathematical description of planetary orbits that gave mathematical rigor to the heliocentric model.

Kepler

Before we state Kepler's Laws, let us describe what an ellipse is.

An ellipse can be constructed by fastening the two ends of a piece of string to two pins at points F_1 and F_2, (fig. 7.4). By keeping the string tight with a pencil at P, the complete arc can be swung around, much the same as one draws a circle with a compass.

Fig.7.4

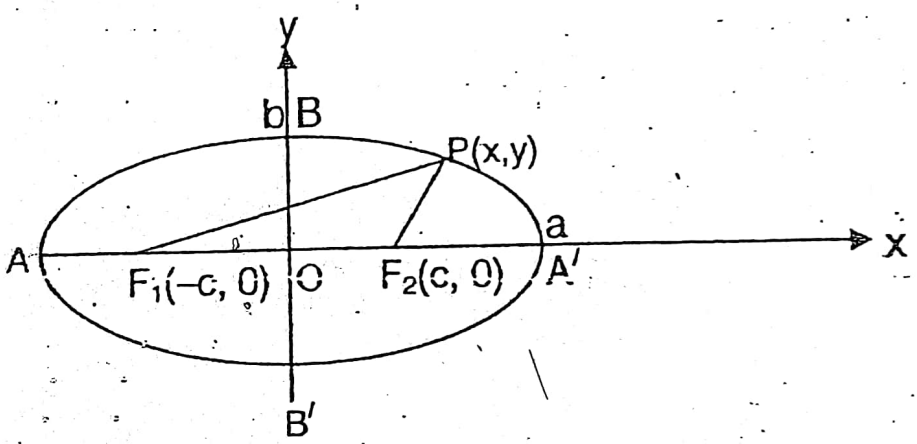

Definition:

An ellipse is the set of points in a plane whose distances from two fixed points in the plane have a constant sum.

Let the sum $PF_1 + PF_2 = 2a$. Then the coordinates of a point P(x, y) on the ellipse must satisfy the equation

$$\sqrt{(x+c)^2+y^2} + \sqrt{(x-c)^2+y^2} = 2a$$

$$\therefore \sqrt{(x+c)^2+y^2} = 2a - \sqrt{(x-c)^2+y^2}$$

Scanned by CamScanner

Squaring both sides and simplifying, we have

$$a - \frac{c}{a}x = \sqrt{(x-c)^2 + y^2}$$

Again squaring and simplifying, we have

$$\frac{x^2}{a^2} + \frac{y^2}{a^2 - c^2} = 1 \qquad \text{(i)}$$

Since the sum $PF_1 + PF_2 = 2a$ of the two sides of the triangle F_1F_2P is greater than the third side $F_1F_2 = 2c$, say; the term $a^2 - c^2$ in equation (i) is positive and has a real positive square root, which we denote by b:

$$b = \sqrt{a^2 - c^2} \qquad \text{(ii)}$$

Then equation (i) becomes

$$\frac{x^2}{a^2} + \frac{y^2}{b^2} = 1 \qquad \text{(iii)}$$

The ellipse intercepts the x– and y– axis at $(\pm a, 0)$ and $(0, \pm b)$ respectively. The length $AA' = 2a$ is called the major axis of the ellipse, while the segment of length $BB' = 2b$ is called the minor axis. The numbers a and b are also referred to respectively as ***semi-major axis*** and ***semi-minor axis***. The fixed points F_1 and F_2 are called ***Foci***.

The Eccentricity of an ellipse

If we keep a fixed and vary c over the range $0 \le c \le a$, the resulting ellipses will vary in shape. When $c = 0$, so that $a = b$, the ellipse becomes a circle. If $c = a$, the ellipse reduces to the line F_1F_2 joining the two foci. The eccentricity e of an ellipse can be defined as the ratio of the distance between the foci to the major axis of the ellipse:

$$e = \frac{c}{a}$$

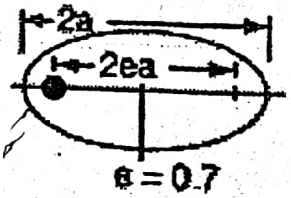

The value of e varies from 0 to 1 and indicates the degree of departure from circularity. We can now state Kepler's Laws.

Scanned by CamScanner

Kepler's First Law:

The planets move in elliptical orbits with the sun at one of the foci.

Most of the planets, including the earth, have orbits that are nearly circular, as can be seen from the eccentricities in the table below.

Eccentricities of Planetory Orbits

Planets	Eccentricities
Mercury	0.21
Venus	0.01
Earth	0.02
Mars	0.09
Jupiter	0.05
Saturn	0.06
Uranus	0.05
Neptune	0.01
Pluto	0.25

Other members of the solar system have orbits that are even more eccentric. For example, Icarus, an asteroid about one mile wide that revolves around the sun every 409 earth days, has an orbital eccentricity of 0.83, fig. 7.5.

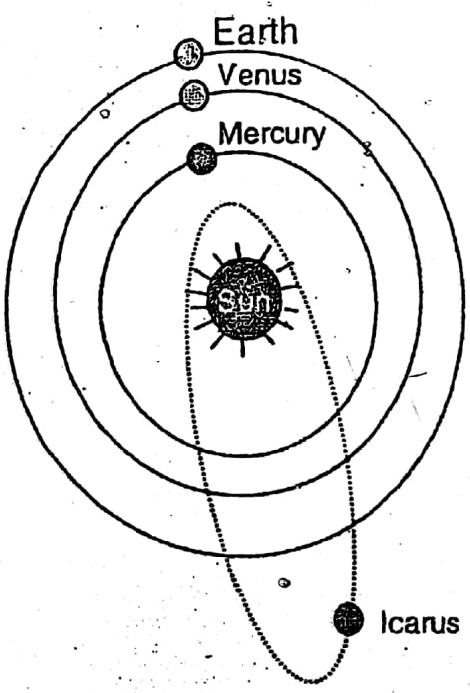

Fig. 7.5

Scanned by CamScanner

Kepler's Second Law:

Fig. 7.6 shows the earth moving in its orbit with the sun at the focus F_1. The distance of closest approach PF_1 is called ***perihelion***, and the greatest distance F_1P' is called ***aphelion***. The straight line PF_1 of length r_1 joining the earth and the sun varies in length from a minimum at perihelion to a maximum at aphelion. The points P, Q, P′ and Q′ in fig. 7.6, correspond to the position of the earth at different times of the year.

Fig. 7.6

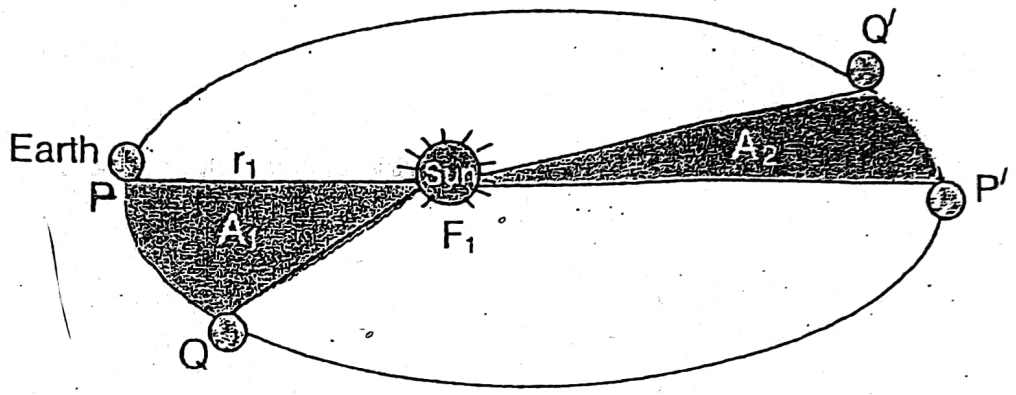

Kepler's Second Law States that

> ***The straight line joining the sun and any planet sweeps out equal areas in equal intervals of time.***

Thus, in fig. 7.6, if the earth takes the same time to travel from P to Q as from P′ to Q′, then the shaded areas A_1 and A_2 swept out are equal.

Kepler's Third Law:

Consider a planet of mass m moving round the sun of mass M. The force of attraction between the planet and the sun, according to Newton's Law of gravitation, is

$$F_g = \frac{GM_s m}{r_s^2} \qquad (7.10)$$

where r_s is the distance between the sun and the planet. This force is equal to the centripetal force, which keeps the planet moving in its orbit. The centripetal force F_c is given by:

$$F_c = m\omega^2 r_s \qquad (7.11)$$

Scanned by CamScanner

Equating (7.10) and (7.11) gives,

$$\frac{GM_s m}{r_s^2} = m\omega^2 r_s$$

$$\therefore \omega_s^2 = \frac{GM_s}{r^3}$$

But $\omega = 2\pi f = \frac{2\pi}{T}$

$$\therefore \left(\frac{2\pi}{T}\right)^2 = \frac{GM_s}{r^3}$$

$$T^2 = \frac{4\pi^2 r^3}{GM_s} \qquad (7.12)$$

Here T is the period of revolution of the planet and $\frac{4\pi^2}{GM_s}$ is a constant.

Hence, equation (7.12) can be written as:

$$T^2 \ \alpha \ r^3 \qquad (7.13)$$

The expression (7.13) is called Kepler's Third Law:

The squares of the orbital periods of the planets are proportional to the cubes of their mean distances from the sun.

7.5 Mass of the Sun

When the period T and the radius r of revolution for any planet are known, the mass of the sun M_s can be determined using equation (7.12). For example, the period of revolution of the earth is

$T = 365.25$ days $= 365.25 \times 24 \times 60 \times 60$s $= 3.15 \times 10^7$s,

and its orbital radius is

$$r = 93 \times 10^6 \text{ miles} = 1.5 \times 10^{11}\text{m}$$

$$\therefore M_s = \frac{4\pi^2 r^3}{GT^2} = \frac{4\pi^2 (1.5 \times 10^{11})^3}{6.67 \times 10^{-11} (3.15 \times 10^7)^2} = 2.0 \times 10^{30} \text{ kg}$$

Scanned by CamScanner

Example 7.5

How far from the earth, must a body be, along a line toward the sun so that the sun's gravitational pull balances the earth's? The sun is 9.3×10^7 Miles away and its mass is $3.24 \times 10^5 M_e$, where M_e is the mass of earth.

Solution:

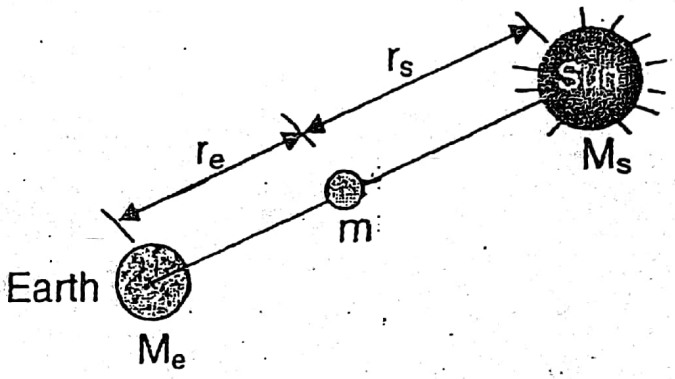

Fig. 7.7

Let the sun's gravitational pull balances the earth's when the body of mass m is at the position shown in fig. 7.7. Then

$$\frac{GM_s m}{r_s^2} = \frac{GM_e m}{r_e^2}$$

$$\therefore \frac{M_s}{r_s^2} = \frac{M_e}{r_e^2}$$

$$\therefore M_s r_e^2 = M_e r_s^2$$

From fig. 7.7, $r_e + r_s = 9.3 \times 107$ mi.

$$\therefore (9.3 \times 10^7 - r_e)^2 = \frac{M_s}{M_e} r_e^2$$

$$\therefore (9.3 \times 10^7)^2 = 3.24 \times 10^5 r_e^2$$

Solving, we get $r_e = 1.6 \times 10^5$ miles

Scanned by CamScanner

7.6 Gravitational Field

When a person pushes an object with his hand, there is an actual contact between his hand and the object. Forces resulting from actual contact between two objects are called ***contact forces***. In the case of ***gravitational forces*** between two mass particles, the particles interact even though they are not in contact. Forces that act between objects even though they are separated by empty space are called ***action at-a-distance*** forces. ***Electromagnetic forces*** are another example.

Another point of view is the field concept, which regards a mass particle as creating a gravitational field in the space around it. This field then acts on any other mass particle in it, exerting the force of gravitational attraction on it. Thus according to this approach, there are two stages to consider in the interaction between two mass particles. First, we must determine the field established by a given distribution of mass particles; and secondly, we must calculate the force that this field exerts on another mass particle placed in it.

A very simple example is the interaction between the earth and any mass particle in its vicinity. The gravitational field created by the earth attracts the mass m with a force $\boldsymbol{F}$ towards the center of the earth. The magnitude of this force is $m\mathbf{g}$. We call $\mathbf{g}$ the gravitational field strength.

Since

$$\mathbf{g} = \frac{\mathbf{F}}{m},$$

we may define gravitational field strength at any point as the gravitational force per unit mass at that point.

The gravitational field $\mathbf{g}$ caused by a point mass M, at a distance r away from it, has magnitude given by

$$\mathbf{g} = \frac{GM}{r^2}\hat{r} \qquad (7.14)$$

and is directed towards the point mass M.

Scanned by CamScanner

7.7 Gravitational Potential Energy

If a particle with mass m is moved from a distance R_1 to a distance R_2 measured from another point-like object with mass M, the work done by the gravitational force is

$$W = -\int_{R_1}^{R_2} F_g\, dr = -GmM\int_{R_1}^{R_2} \frac{dr}{r^2}$$

$$= GmM\left(\frac{1}{R_2} - \frac{1}{R_1}\right) \qquad (7.15)$$

The associated change in potential energy is the negative of the work done, i.e.

$$U_2 - U_1 = -GMm\left(\frac{1}{R_2} - \frac{1}{R_1}\right)$$

The potential energy at infinity is conventionally taken to be zero i.e. if $R_1 \to \infty$, $U = 0$. Then, for a separation $R_2 = r$, we have

$$U(r) = -G\frac{mM}{r} \qquad (7.16)$$

7.8 Escape Velocity

The gravitational potential energy of a body of mass m at the surface of the earth is

$$U = -\frac{GM_e m}{R_e}$$

The amount of work W required to move a body from the surface of the earth to infinity is, therefore

$$W = \frac{GM_e m}{R_e}$$

If a projectile is given energy more than this at the surface of the earth, then neglecting the resistance of the earth's atmosphere, it would escape from the

Scanned by CamScanner

earth never to return. If the projectile leaves the earth with a speed v_e such that it does not return,

$$\frac{1}{2}Mv_e^2 = \frac{GM_e m}{R_e}$$

$$\therefore v_e = \sqrt{\frac{2GM_e}{R_e}}$$

But $g = \frac{GM}{R_e^2}$.

$$\therefore v_e = \sqrt{2gR_e} \qquad (7.17)$$

Substituting $R_e = 6.4 \times 10^6$ m and $g = 9.8$ m/s^2, we get

$$v_e = \sqrt{2 \times 9.8 \times 6.4 \times 10^6} = 11.2 \text{ km/s.}$$

Should a projectile be given this initial speed v_e, it would escape from the earth. For this reason v_e is called escape velocity.

Example 7.6

Mars has a mean diameter of 6900 km; Earth one of 1.3×10^4 km. The mass of Mars is $0.11m_e$.

(a) How does the mean density of mars compare with that of earth?
(b) What is the value of g on mars?
(c) What is the escape velocity on mars?

Solution:

Let M_e be the mass of Earth and M_m Mass of mars.

(a) Mean diameter of Mars $D_m = 6900$ km.
Mean diameter of Earth $D_e = 1.3 \times 10^4$ km.

Let the Earth and the Mars be spherical in shape.

Scanned by CamScanner

Then the density of the Earth is

$$\rho_e = \frac{M_e}{V_e} = \frac{M_e}{\frac{4}{3}\pi\left(\frac{D_e}{2}\right)^3} \qquad \text{(i)}$$

and that of Mars is

$$\rho_m = \frac{M_m}{\frac{4}{3}\pi\left(\frac{D_m}{2}\right)^3} \qquad \text{(ii)}$$

Dividing equation (ii) by (i), we have

$$\frac{\rho_m}{\rho_e} = \left(\frac{D_e}{D_m}\right)^3 \cdot \frac{M_m}{M_e} = \left(\frac{1.3 \times 10^4}{6900}\right)^3 \times 0.11$$

$$\therefore \rho_m = 0.73\rho_e$$

(b) Consider a body of mass *m* on the surface of the Earth. Then

$$mg_e = \frac{GM_e m}{r_e^2}$$

$$\therefore g_e = \frac{GM_e}{r_e^2} \qquad \text{(iii)}$$

Similarly, for the same body on Mars, we have

$$g_m = \frac{GM_m}{r_m^2} \qquad \text{(iv)}$$

Dividing equation (iv) by (iii), we have

$$\frac{g_m}{g_e} = \left(\frac{M_m}{M_e}\right)\left(\frac{D_e}{D_m}\right)^2 = 0.11 \times \left(\frac{130 \times 10^3}{69 \times 10^2}\right)^2$$

$$\therefore g_m = 9.8 \times 0.11 \times \left(\frac{130}{69 \times 10^2}\right)^2 = 3.7 m/s^2$$

where $g_e = 9.8\ m/s^2$.

Scanned by CamScanner

(c) The escape velocity v_e on Earth is

$$v_e = \sqrt{2g_e r_e} \qquad \text{(v)}$$

while the on Mars, the escape velocity is

$$v_m = \sqrt{2g_m r_m} \qquad \text{(vi)}$$

Dividing (vi) and (v), we have:

$$\frac{v_m}{v_e} = \sqrt{\frac{2g_m r_m}{2g_e r_e}}$$

$$v_m = v_e \sqrt{\frac{g_m}{g_e} \times \frac{D_m}{D_e}}$$

$$= (11.2\ \text{km/s}) \sqrt{\frac{3.7}{9.8} \times \frac{6900}{1.3 \times 10^4}} = 5.0\ \text{km/s}$$

Problems Set 7:

1. The Earth's radius is about 6370 km. An object that has a mass of 20 kg is taken to a height 160 km above the Earth's surface.

   (a) What is the object's mass at this height?

   (b How much does the object weigh (i.e., how large a gravitational force does it experience) at this height?

Answer:

(a) The mass is the same as that on the Earth's surface.

(b) $W_2 = 186.5$ N.

Scanned by CamScanner

2. Calculate the force of attraction between two 90-kg of metal spaced so that their centers are 40 cm apart.

Answer: 3.38×10^{-6} N

3. A mass m_1 = 3 kg weighs one-sixth as much on the surface of the Moon as on the Earth. Calculate the mass m_2 of the Moon. The radius of the Moon is 1.738×10^6 m.

Answer: 7.4×10^{22} kg.

4. The moon orbits the Earth in an approximately circular path of radius 3.8×10^8 m. It takes about 27 days to complete one orbit. What is the mass of the earth as obtained from these data?

Answer: 6.0×10^{24} kg.

5. Communication satellites are placed in orbit above the equator in such a way that they remain stationary above a given point on earth below. How high above the surface of the earth is such a synchronous orbit? (R_e = 6400 km, $M_e = 5.98 \times 10^{24}$ kg).

Answer: h = 35800 km.

6. Consider an attractive force which is central but inversely proportional to the first power of the distance $\left(F \propto 1/r\right)$. Prove that if a particle is in a circular orbit under such a force, its speed is independent of the orbital radius, but its period is proportional to the radius.

7. The mean distance of Mars from the Sun is 1.52 times that of Earth from the Sun. Find the number of years required for Mars to make one revolution about the Sun.

Answer: 1.87 years.

Scanned by CamScanner

8. Estimate the maximum height a man can jump vertically on the Moon's surface if he can jump 2 m on the Earth. Assume the Earth has a radius about 4 times that of the Moon and a mean density about six times that of the Moon.

Answer: h = 13 m.

9. The orbit of the Earth round the Sun has a radius about 1.5×10^{11} m and a period of 1 year. Estimate the mass of the Sun if $G = 6.6 \times 10^{-11}$ N.

Answer: $M_s = 2 \times 10^{30}$ kg.

10. The mass of the earth is 81 times the mass of the moon. Find the point of weightlessness between the earth and the moon.

Answer: $\frac{S}{R} = \frac{9}{10}$,

where S is the distance from the Earth to the point of weightlessness and R is the distance from the Earth to the moon.

11. The Challenger–an American space shuttle–orbited the earth at an altitude of 230 km in a circular orbit. Find its speed in orbit and the time for one complete orbit.

(Take the radius and mass of the Earth to be 6.38×10^6 m and 5.98×10^{24} kg respectively.)

Answer: $v = 7.8 \times 10^3$ m/s, $t = 5.3 \times 10^3$ s

Scanned by CamScanner

CHAPTER 8

SIMPLE HARMONIC MOTION

8.1 Introduction

Any motion that repeats itself in equal intervals of time is called ***periodic motion***. If an object executing periodic motion moves back and forth over the same path, the motion is described as ***Oscillatory*** or ***Vibratory***.

Some familiar examples of oscillatory motions are the motion of a simple pendulum, fig. 8.1(a), and the motion of a block attached to a spring, fig. 8.1 (b).

Fig. 8.1

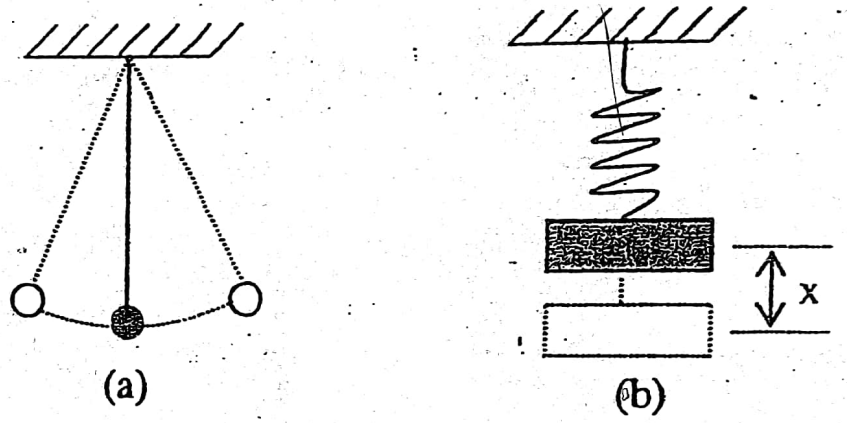

We start the motion of an oscillatory system, like the simple pendulum (Fig.8.2), by displacing the bob from its equilibrium position O to position A. When such a displacement is made, a ***restoring force*** F acts to return the bob to its equilibrium position O, but its inertia causes it to over shoot this point. The motion of the bob continues until when it reaches position B, the restoring force stops it and then pulls it back again toward the equilibrium position. The result is a continuing oscillatory motion back and forth through the equilibrium position.

Fig. 8.2

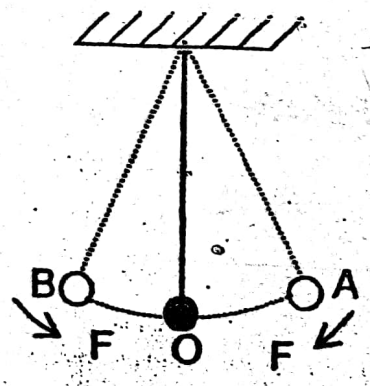

Scanned by CamScanner

8.2 Damping and Free Oscillations

As a simple pendulum continues to vibrate, after some times it stops. In such a case, we say the motion is ***damped***. The damping is due to energy-dissipating effects, such as friction due to air. In order to maintain the oscillatory motion, energy must be continually supplied to the system. The main spring of a watch, for example, supplies external energy so that the balance wheel moves as if it is undamped. In the absence of any damping forces, the oscillations are said to be **free.**

8.3 Restoring Force and Potential Function

A particle undergoing harmonic motion passes back and forth through its equilibrium position. At this position, the potential energy of the particle is a minimum. If at the coordinate x the particle has a potential energy U(x), then the force F acting on the particle is given by

$$F = -\frac{dU(x)}{dx} \qquad (8.1)$$

Now consider a block of mass m attached to the end of a spring, fig. 8.3.

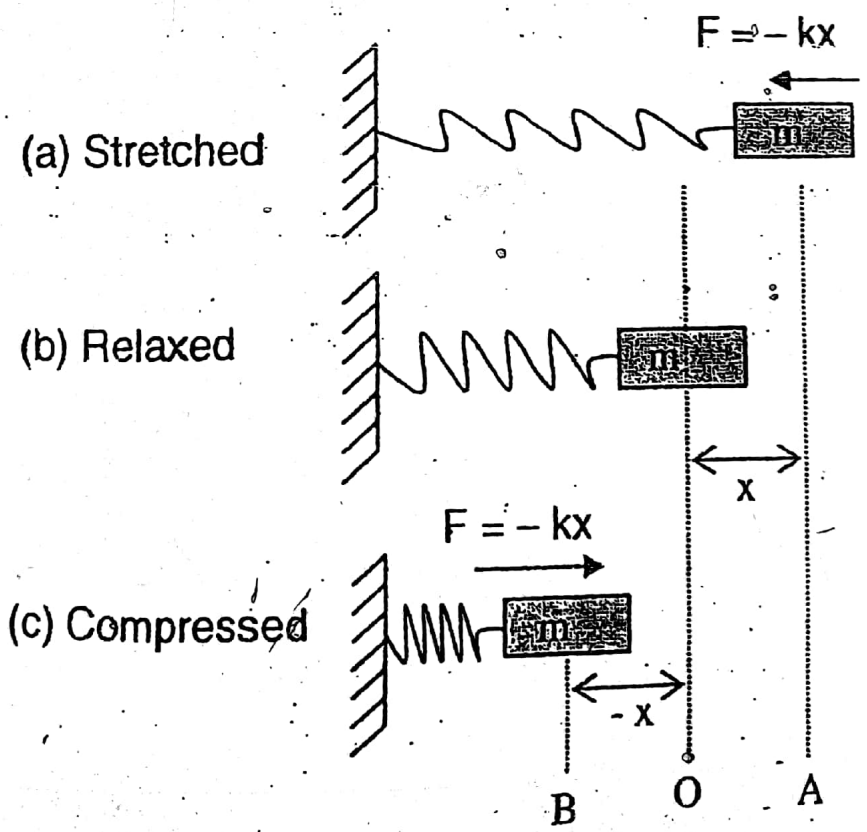

Fig. 8.3

Scanned by CamScanner

In fig. 8.3(a), the spring is stretched to the right through a distance x. The potential energy of the spring is

$$U(x)=\frac{1}{2}kx^2, \qquad (8.2)$$

where k is the spring constant.

The force exerted by the stretched spring on the block is, according to equation (8.1),

$$F=-\frac{dU(x)}{dx}=-\frac{d}{dx}\left(\frac{1}{2}kx^2\right)=-kx$$

$$\therefore F=-kx \qquad (8.3)$$

This force is the restoring force. Its direction is to the left. Equation (8.3) is called ***Hooke's Law*** which states that

the extension of an elastic body is proportional to the force applied provided the elastic limit is not exceeded.

Fig. 8.3(b) corresponds to the equilibrium position when the spring is relaxed and exerts no force on the block. If the body is displaced to the left, the restoring force points to the right (fig. 8.3 c) and is also given by $F=-kx$.

According to Newton's Second Law, the restoring force $F = ma$.

$$\therefore -kx = ma = m\frac{d^2x}{dt^2}$$

$$\therefore \frac{d^2x}{dt^2}=\left(\frac{-k}{m}\right)x \qquad (8.4)$$

$$\therefore \frac{d^2x}{dt^2}\propto(-x)$$

i.e. the acceleration is proportional to the negative of the displacement .Hence,

Simple Harmonic Motion is defined as the motion of a body whose acceleration is proportional to the negative of the displacement.

Scanned by CamScanner

Equation (8.4) is the differential equation whose solution x(t) describes the motion. This equation simply says x(t) is a function whose second derivative is the negative of the function itself, except for a constant $\frac{k}{m}$. The sine and cosine functions each have this property. For if

$$x = \sin t,$$

$$\frac{d^2x}{dt^2} = -\sin t$$

This property is not affected if the sine function is multiplied by a constant A. We can therefore write the solution to equation (8.4) as

$$x(t) = A \sin(\omega t + \varphi) \qquad (8.5)$$

This is the expression for the displacement of the block. The block of mass m moves to and fro on the frictionless surface with velocity v given by

$$v = \frac{dx}{dt} = A\omega \cos(\omega t + \varphi) \qquad (8.6)$$

The acceleration a is given by

$$a = \frac{dv}{dt} = \frac{d^2x}{dt^2} = -A\omega^2 \sin(\omega t + \varphi) \qquad (8.7)$$

Substituting $\frac{d^2x}{dt^2} = -A\omega^2 \sin(\omega t + \varphi)$ and $x = A \sin(\omega t + \varphi)$ in equation (8.4), we have

$$-A\omega^2 \sin(\omega t + \varphi) = -\frac{k}{m} A \sin(\omega t + \varphi)$$

$$\therefore \omega^2 = \frac{k}{m} \qquad (8.8)$$

Therefore, if we choose the constant ω such that

$$\omega^2 = \frac{k}{m},$$

Scanned by CamScanner

then,

$$x = A\sin(\omega t + \varphi)$$

is a solution to the differential equation for the simple harmonic motion. The constant A is the maximum displacement from the equilibrium position. It is called the **Amplitude**. The constant ω is called the **angular frequency** and is equal to 2πf, where f is the frequency measured in Hertz.

$$\therefore \omega^2 = (2\pi f)^2 = \frac{k}{m}.$$

$$\therefore f = \frac{1}{2\pi}\sqrt{\frac{k}{m}}.$$

Since $T = \frac{1}{f}$, we have

$$T = 2\pi\sqrt{\frac{m}{k}} \qquad (8.9)$$

The **period** is the time taken to make one complete vibration. The **frequency** f is defined as the number of vibrations per unit time.

8.4 Energy Consideration in Simple Harmonic Motion

The displacement of the block of mass m in fig. 8.3 at any instant can be expressed as

$$x = A\,\mathrm{Sin}(\omega t + \varphi),$$

while the potential energy U(x) is

$$U(x) = \frac{1}{2}kx^2 = \frac{1}{2}kA^2\sin^2(\omega t + \varphi) \qquad (8.10)$$

Now, the Kinetic energy at any instant is $\frac{1}{2}mv^2$.

Scanned by CamScanner

But

$$v = \frac{dx}{dt} = \omega A \cos(\omega t + \varphi).$$

$$\therefore K.E = \frac{1}{2}mv^2 = \frac{1}{2}m\omega^2 A^2 \cos^2(\omega t + \varphi)$$

Using $\omega^2 = \frac{k}{m}$, we have

$$K.E = \frac{1}{2}kA^2 \cos^2(\omega t + \varphi) \qquad (8.11)$$

The total Mechanical energy of the system is, therefore

$$E = K.E + P.E$$

$$= \frac{1}{2}kA^2\cos^2(\omega t + \phi) + \frac{1}{2}kA^2\sin^2(\omega t + \phi)$$

$$= \frac{1}{2}kA^2[\cos^2(\omega t + \phi) + \sin^2(\omega t + \phi)] = \frac{1}{2}kA^2$$

Hence, the total energy E is

$$E = \frac{1}{2}kA^2 \qquad (8.12)$$

Since both k and A are constants, the total mechanical energy of a particle executing simple harmonic motion is therefore constant i.e.

$$K.E + P.E = \frac{1}{2}kA^2,$$

$$\therefore \frac{1}{2}mv^2 + \frac{1}{2}kx^2 = \frac{1}{2}kA^2$$

$$\therefore mv^2 = kA^2 - kx^2$$

$$v^2 = \frac{k}{m}(A^2 - x^2) = \omega^2(A^2 - x^2),$$

$$\therefore v = \pm\omega\sqrt{A^2 - x^2} \qquad (8.13)$$

where $\omega^2 = k/m$.

Scanned by CamScanner

Example 8.1:

A spring stretches by 3.0 cm from its relaxed length when a force of 7.5 N is applied. A particle with mass of 0.50 kg is attached to the free end of the spring, which is then compressed horizontally by 5.0 cm from its relaxed length and released from rest at t = 0.

(a) What is the spring constant k?
(b) Find the period T, the frequency f, and the angular frequency ω of the oscillation.
(c) Find the amplitude *A* and the initial phase angle ϕ of the motion.
(d) Find the maximum velocity v_{max} and the maximum acceleration a_{max}.
(e) Find the total energy E of the system.
(f) Determine the displacement x, the velocity v and the acceleration a when $\omega_o t = \frac{\pi}{8}$

Solution

(a) $F = -7.5\ N,\ x = 3.0cm = 3.0 \times 10^{-2} m.$

From $F = -kx$, we have

$$k = -\frac{F}{x} = -\frac{(-7.5)}{3.0 \times 10^{-2}} = 250\ Nm$$

(b) $\omega^2 = \frac{k}{m}$, where m = 0.5 kg.

$$\therefore \omega = \sqrt{\frac{k}{m}} = \sqrt{\frac{250}{0.5}} = 22.36\ rad/s$$

But $\omega = 2\pi f$.

$$\therefore f = \frac{\omega}{2\pi} = \frac{22 \cdot 36}{2\pi} = 3 \cdot 6Hz$$

$$T = \frac{1}{f} = \frac{1}{3.6} = 0.281\ s$$

Scanned by CamScanner

(c) Initial displacement $x = -5.0$ cm, initial velocity $v = 0$.

Now,

$$v = \pm\omega\sqrt{A^2 - x^2}$$

$$0 = \pm\omega\sqrt{A^2 - (-5.0)^2}$$

$$\therefore A = 5.0 \text{ cm} = 5.0 \times 10^{-2} \text{ m.}$$

From

$$x = A\sin(\omega t + \varphi), \qquad (i)$$

we have

$$v = \frac{dx}{dt} = A\omega\cos(\omega t + \varphi) \qquad (ii)$$

At $t = 0$,

$$x = A\sin(0 + \varphi) \qquad (iii)$$

$$v = A\omega\cos(0 + \varphi) \qquad (iv)$$

Dividing eq. (iii) by (iv) we have

$$\frac{x}{v} = \frac{A\sin\varphi}{A\omega\cos\varphi} = \frac{\tan\varphi}{\omega}$$

$$\therefore \tan\varphi = \left(\frac{\omega x}{v}\right)$$

The initial condition is $x = -5.0$ cm and $v = 0$.

$$\therefore \tan\varphi = \left(\frac{22.36 \times 5 \times 10^{-2}}{0}\right)$$

$$\therefore \varphi = \tan^{-1}(-\infty) = \frac{3\pi}{2}$$

Therefore, the displacement x is

$$x = A\sin(\omega t + \varphi) = 0.05\sin\left(22.36t + \frac{3\pi}{2}\right)$$

Scanned by CamScanner

(d) The velocity v is given by equation (8.6):

$$v = A\omega \cos(\omega t + \varphi)$$

Maximum value of v occurs when $\cos(\omega t + \varphi) = 1$

$$\therefore v_{max} = A\omega = 5 \times 10^{-2} \times 22.36 = 1.118 \text{ m/s}.$$

From equation (8.7), the acceleration a is

$$a = -A\omega^2 \sin(\omega t + \varphi).$$

Maximum value of a occurs when $\sin(\omega t + \varphi) = 1$.

$$\therefore a_{max} = A\omega^2 = 5 \times 10^{-2} \times (22.36)^2 = 25.0 \text{ m/s}^2.$$

(e) From equation (8.12), the total energy is

$$E = \frac{1}{2}kA^2 = \frac{1}{2}(250)(\times 10^{-2})^2 = 0.3125 \text{ J}.$$

(f) When $\omega t = \frac{\pi}{8}$, $\phi(t) = \omega t + \varphi = \frac{\pi}{8} + \frac{3\pi}{2} = \frac{13\pi}{8} = 292.5°$

$$\therefore x = A\sin(\omega t + \varphi) = 0.050 \sin 292.5° = -0.0462\text{m}$$

$$v = A\omega \sin(\omega t + \varphi) = (0.050)(22.36)\sin\left(\frac{\pi}{8} + \frac{3\pi}{2}\right) = 0.428 \text{ m/s}$$

$$a = -A\omega^2 \sin(\omega t + \varphi) = -(0.050)(22.36)^2 \sin\frac{13\pi}{8} = 23.1 \text{ m/s}^2$$

Example 8.2:

A horizontal spring–and–block system (Fig. 8.3) has an angular frequency $\omega = 3\pi$ rad/s. Determine x(t) if the block is displaced to x = 0.25 m and given velocity equal to v = –1.5 m/s at t = 0.

Solution: At t = 0, $\omega = 3\pi$ rad/s, x = 0.25 and v = –1.5 m/s.

$$\therefore \tan\phi = \frac{\omega x}{v} = \frac{3\pi \times 0.25}{-1.5} = -1.571$$

$$\therefore \phi = \tan^{-1}(-1.571) = 122.48° = 0.68\pi$$

Scanned by CamScanner

From equation (8.13),

$$v^2 = \omega^2 (A^2 - x^2)$$

$$\therefore A = \sqrt{x^2 + \left(\frac{v}{\omega}\right)^2} = \sqrt{(0.25)^2 + \left(\frac{-1.5}{3\pi}\right)^2} = 0.296 \text{ m}$$

$$\therefore x(t) = A \text{ Sin } (\omega t + \varphi) = 0.296 \text{ Sin } (3\pi t + 0.68\pi)$$

Example 8.3:

Show that under suitable conditions, the motion of a simple pendulum is simple harmonic and hence obtain an expression for its period.

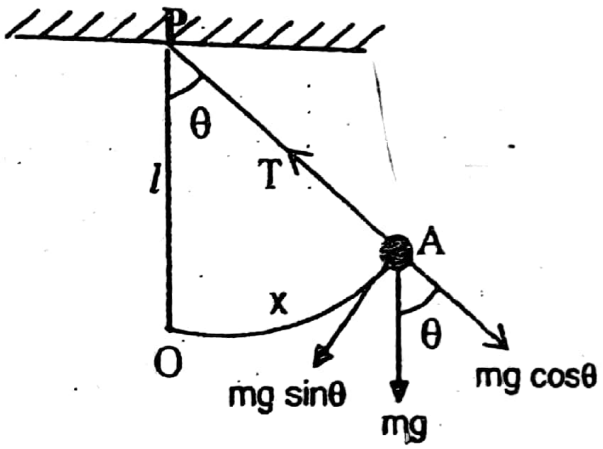

Fig. 8.4

Solution:

A simple pendulum consists of a bob suspended by a string from a point, so that it can swing freely in a vertical plane, fig. 8.4. Suppose at some instant the bob is at A, where arc OA = x and the angle OPA = θ. The forces acting on the bob are the tension T and the weight mg of the bob, acting vertically downwards. We can resolve the weight mg into radial and tangential components at A:

the tangential component of mg is mg sinθ,
while the radial component is mg cosθ.

The tangential component is equal to the restoring force acting towards O. By Newton's law,

$$-mg \sin\theta = ma \qquad \text{(i)}$$

Scanned by CamScanner

The negative sign indicates that the force is acting towards the equilibrium position O, while the displacement x is measured along the arc from O in the opposite direction.

From fig. 8.4, if θ is small,

$$\frac{x}{l} = \sin\theta \approx \theta$$

Equation (i) can now be written as

$$-mg\theta = ma \quad \Rightarrow \quad -g\frac{x}{l} = a = \frac{d^2x}{dt^2}$$

$$\therefore \frac{d^2x}{dt^2} = -\frac{g}{l}x \qquad \text{(ii)}$$

$$\therefore \frac{d^2x}{dt^2} \propto -x$$

i.e. *the **acceleration is proportional to the negative of the displacement.***

Therefore, the motion is simple harmonic.

Comparing equation (ii) with the differential equation

$$\frac{d^2x}{dt^2} = -\omega^2 x,$$

we see that

$$\omega^2 = \frac{g}{l} \qquad \therefore \omega = \sqrt{\frac{g}{l}}.$$

The period T is therefore, $T = \frac{2\pi}{\omega} = 2\pi\sqrt{\frac{l}{g}}$

Example 8.4:

A particle moving with SHM has velocities of 4 cm/s and 3 cm/s at distances of 3 cm and 4 cm respectively from its equilibrium position. Find

(a) the amplitude of the oscillation,
(b) the period and
(c) the velocity of the particle as it passes through the equilibrium position.

Scanned by CamScanner

Solution:

(a) When x = 3 cm, v = 4 cm/s.

$$v = \omega\sqrt{A^2 - x^2}$$

$$\therefore 4 = \omega\sqrt{A^2 - 3^2} \qquad (i)$$

When $x = 4$ cm, v = 3 cm/s.

$$\therefore 3 = \omega\sqrt{A^2 - 4^2} \qquad (ii)$$

Dividing equation (ii) by (i) we get

$$\frac{3}{4} = \frac{\omega\sqrt{A^2 - 4^2}}{\omega\sqrt{A^2 - 3^2}}$$

Squaring both sides gives

$$\frac{9}{16} = \frac{A^2 - 4^2}{A^2 - 3^2}$$

$$\therefore A = \pm 5 \text{ cm.}$$

(b) Substituting the value of A in equation (*i*) we have

$$4 = \omega\sqrt{5^2 - 3^2} = \omega\sqrt{16} = 4\omega$$

$$\therefore \omega = 1 \text{ rad/s}$$

$$\therefore T = \frac{2\pi}{\omega} = \frac{2\pi}{1} = 2\pi = 6.28 \text{ s}$$

(c) $v = \omega\sqrt{A^2 - x^2}$

At the equilibrium position, x = 0

$$\therefore v = \omega\sqrt{A^2 - 0} = (1)\sqrt{5^2} = 5 \text{ cm/s}$$

Scanned by CamScanner

Example 8.5

A simple pendulum has a period of 2.0 s and amplitude of swing 5.0 cm. Calculate the maximum magnitude of

(a) the velocity of the bob (b) the acceleration of the bob

Solution: $T = 2\ s,\ A = 5.0\ cm = 5 \times 10^{-1}\ m$

(a) $v = \pm\,\omega\sqrt{A^2 - x^2}$

The velocity is a maximum at the equilibrium position where $x = 0$.

$$\therefore v_{max} = \pm\omega\sqrt{A^2 - 0}$$

$$= \pm\,\omega A = \pm\,2\pi f\,A = \pm\,(2\pi)\left(\frac{1}{T}\right)A$$

$$= \pm(2\pi)\left(\frac{1}{2}\right)(5 \times 10^{-2})\,m/s = \pm\,16 \times 10^{-1}\,m/s$$

(b) $$a = -\omega^2 A = -\left(\frac{2\pi}{T}\right)^2 A = -\left(\frac{2\pi}{2}\right)^2 (5 \times 10^{-2}) = -50 \times 10^{-2}\,m/s^2$$

Example 8.6:

A mass m suspended from a spring of constant k has a period T. If a mass M is added, the period becomes 3T. Find M in terms of m.

Solution:

When the suspended mass is m, the period is T.

$$\therefore T = 2\pi\sqrt{\frac{m}{k}} \qquad \text{(i)}$$

If the mass M is added, the total mass is m + M and the period becomes $T' = 3T$.

$$\therefore T' = 3T = 2\pi\sqrt{\frac{m + M}{k}} \qquad \text{(ii)}$$

Scanned by CamScanner

Dividing equation (ii) by (i) we have

$$\frac{3T}{T} = \frac{2\pi}{2\pi}\sqrt{\frac{M+m}{k}\cdot\frac{k}{m}}$$

$$3 = \sqrt{\frac{M+m}{m}}$$

Squaring both sides, we have

$$9 = \frac{M+m}{m}$$

Solving, we have M = 8 m.

Example 8.7

A body executes Simple Harmonic Motion with amplitude of 2.00 cm and a frequency of 3.00 Hz. At t = 0 s, the displacement is x(0) = 0.0 cm and the velocity v(0) is positive.

(a) Obtain an analytical expressions for the displacement x(t), the velocity v(t) and the acceleration a(t).

(b) Evaluate the expressions found in part (a) for t = 5 ms.

Solution: A = 2.00 cm, f = 3.00 Hz; $\therefore \omega = 2\pi f = 2\pi(3.00) = 6.00\pi$.

Let the displacement x(t) be

$$x(t) = A \sin(\omega t + \varphi) \qquad \text{(i)}$$

Then the velocity v is

$$v = \frac{d\,x(t)}{dt} = A\omega \cos(\omega t + \varphi) \qquad \text{(ii)}$$

At t = 0, x(0) = 0. Substituting these values in equation (i), we have

$$0 = 2 \sin[(6.00\pi)(0.0) + \varphi] = \sin\varphi$$

$$\sin\varphi = 0. \therefore \varphi = 0.0.$$

$$\therefore x(t) = A \sin(\omega t + 0) = A \sin(\omega t) = 2.0(\text{cm}) \sin 6.00\pi t.$$

Scanned by CamScanner

The velocity v from equation (ii) is

$$v = A\omega\cos(\omega t + 0) = (2.00)(6.00\pi)\cos\omega t = 12.00\pi\ (\text{cm/s})\cos 6.00\pi t$$

The acceleration a is given by

$$a = \frac{dv}{dt} = -(12.00\pi)(6.00\pi)\sin 6.00\pi t = -72.00\pi^2(\text{cm/s}^2)\sin 6.00\pi t$$

(b) At t = 5 ms = 5×10^{-3} s,

$$\therefore x(t) = 2.00(\text{cm})\sin(6.00\pi)(5 \times 10^{-3}) = 2.00\sin 0.03\pi = 0.19\ \text{cm}$$

$$v = 12.00\pi\cos(6.00\pi)(5 \times 10^{-3}) = 12.00\pi\cos 0.03\pi = 37.5\ \text{cm/s}$$

$$a = -72.00\pi^2\ (\text{cm/s}^2)\sin 0.03\pi = -66.87\text{cm/s}^2$$

Example 8.8:

9 kg of mercury are poured into a glass U-tube, Fig. 8.5. The tube's inner diameter is 1.2 cm and the mercury oscillates freely up and down about its position of equilibrium (x = 0). Compute:

(a) the effective spring constant for the oscillation and
(b) the period of oscillation. Take the density of mercury to be 13600 kg/m^3.

Ignore frictional and surface tension effects.

Fig. 8.5

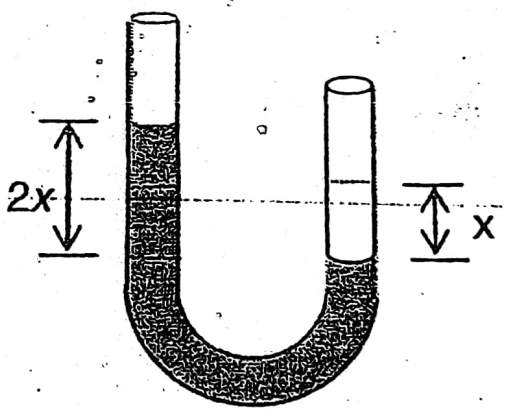

Solution:

Mass of mercury m = 90 kg, radius of the tube r = 0.6 cm.
Density of mercury ρ = 13600 kg/m^3.
If the mercury is displaced through a distance x from its equilibrium position, as shown in fig. 8.5, the restoring force is equal to the weight W of the unbalanced column of mercury with height h = 2x.

Scanned by CamScanner

Now, W = mg. Hence, the restoring force F = – mg,
The volume V of mercury within the height 2x is

$$V = \pi r^2 h = \pi r^2 (2x).$$

Using mass m = volume V x density ρ, we have

$$\therefore \text{restoring force } F = -mg = -(\text{Volume x density})\, g$$
$$= -\pi r^2 (2x)\, \rho g. \qquad \text{(i)}$$

Comparing equation (i) with Hooke's Law, F = –kx, we have

$$-\pi r^2 (2x)\, \rho g = -kx.$$
$$\therefore k = 2\pi r^2 \rho g = 2\pi\, (0.6 \times 10^{-2})^2 (13600)(10) = 30 \text{ N/m}$$

(b) The period of the vibration is, therefore, $T = 2\pi\sqrt{\frac{m}{k}} = 2\pi\sqrt{\frac{9}{30}} = 3.4$ s

Example 8.9:

Springs A and B in fig. 8.6, have spring constants of 2000 N/m and 1000 N/m, respectively. Spring A is hung from a horizontal rigid beam and its other end is attached to an end of spring B. The pair of springs is then used to suspend a body of mass 50 kg from the lower end of spring B. What is the period of harmonic oscillation of the system?

Solution: $k_A = 2000$ N/m, $k_B = 1000$ N/m, m = 50 kg

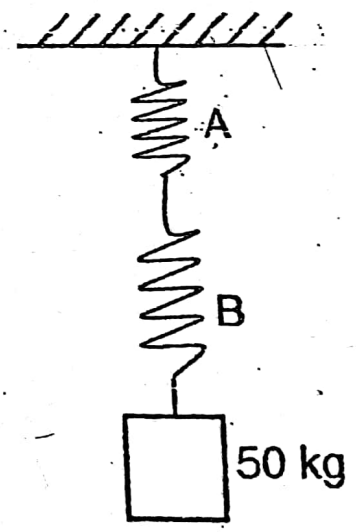

Fig. 8.6

Suppose that when the 50-kg mass is attached to the lower end of spring B, spring A stretches by x_A while spring B stretches by x_B. Therefore, the compound spring stretches by

$$x = x_A + x_B.$$

But

$$x_A = \frac{F}{k_A} \text{ and } x_B = \frac{F}{k_B}.$$

Therefore,

$$x = \frac{F}{k_A} + \frac{F}{k_B} = F\left(\frac{k_A + k_B}{k_A k_B}\right) = F\left(\frac{1}{k_{eff}}\right),$$

Scanned by CamScanner

where $k_{eff} = \dfrac{k_A k_B}{k_A + k_B}$, is the effective spring constant.

$$\therefore k_{eff} = \frac{k_A k_B}{k_A + k_B} = \frac{(2000)(1000)}{2000+1000} = 666.67 \text{ N/m}$$

Therefore, the period T of oscillation is

$$T = 2\pi\sqrt{\frac{m}{k_{eff}}} = 2\pi\sqrt{\frac{50}{666.67}} = 1.72 \text{ s}$$

8.5 The Torsional Pendulum

The torsional pendulum consists of a disk suspended by a wire attached to the center of mass of the disk, fig. 8.7.

If the disk is rotated in a horizontal plane from P to the radial position Q, the wire will be twisted. The twisted wire exerts a torque on the disk tending to return it to the position P. This is the restoring torque. For small twists (small θ), the restoring torque is proportional to the angular displacement θ (Hooke's Law). Hence,

$$\text{Torque } \Gamma = -\kappa\theta, \qquad (8.14)$$

where κ is a constant that depends on the properties of the wire. It is called the ***torsional constant.***

If I is the moment of inertia of the system about the axis of the suspension rod, we have

$$\Gamma = I\alpha = -\kappa\theta.$$

$$\therefore I\frac{d^2\theta}{dt^2} = -\kappa\theta$$

$$\therefore \frac{d^2\theta}{dt^2} = -\left(\frac{\kappa}{I}\right)\theta \qquad (8.15)$$

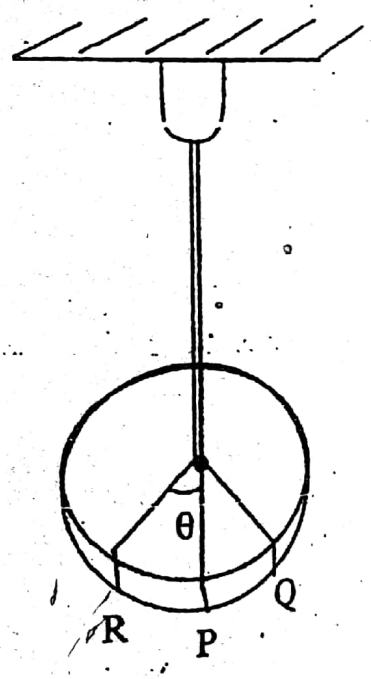

Fig. 8.7

Scanned by CamScanner

The angular frequency ω is therefore given by

$$\omega^2 = \frac{\kappa}{I} \qquad \therefore \omega = \sqrt{\frac{\kappa}{I}}$$

$$\therefore T = \frac{2\pi}{\omega} = 2\pi\sqrt{\frac{I}{\kappa}}$$

Equation (8.15) is similar in form to equation (8.4). We can therefore write the solution for the torsional vibration as

$$\theta = \theta_o \operatorname{Sin}(\omega t + \varphi) \qquad (8.16)$$

Example 8.10:

A uniform bar is suspended in a horizontal position by a vertical wire attached to its center. When a torque of 5 N·m is applied to the bar as shown in Fig. 8.8, the bar moves through an angle of 12°. If the bar is then released, it oscillates as a torsional pendulum with a period of 0.5 s. Determine its moment of inertia.

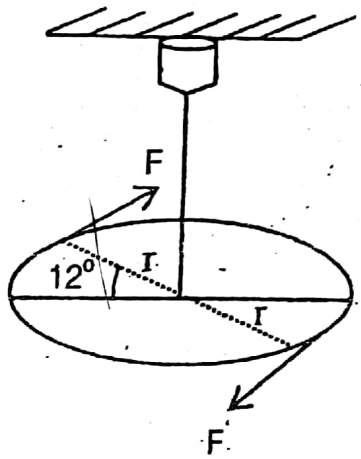

Fig. 8.8

Solution: $\theta_o = 12° = \frac{12\pi}{180}$ radians

Torque $\Gamma = 5$ Nm, $T = 0.5$ s.

$$\Gamma = -\kappa\theta,$$

$$\therefore \kappa = \frac{|\Gamma|}{\theta} = \frac{5}{12\pi}(180) = 23.9 \text{ Nm/rad.}$$

From $T = 2\pi\sqrt{\frac{I}{\kappa}}$, we have

$$I = \left(\frac{T}{2\pi}\right)^2 \kappa = \left(\frac{0.5}{2\pi}\right)^2 (23.9) = 0.15 \text{ kg}\cdot\text{m}^2$$

Scanned by CamScanner

Example 8.11

Find the period of motion for a torsional pendulum consisting of a uniform 400-g sphere, of radius 8.0 cm, suspended from a torsion wire 4 m long. The wire twists through 90° when a torque of 0.40 N.m is applied to it.

Solution

Mass of sphere M = 0.4 kg, radius of sphere $r = 8.0 \times 10^{-1}$ m,

$\theta = 90^\circ = \frac{90}{180}\pi$ rad $= 0.5\pi$ rad, Torque $\Gamma = 0.4$ N·m.

Now, $\Gamma = -\kappa\theta$.

$$\therefore \kappa = \frac{|\Gamma|}{\theta} = \frac{0.4}{0.5\pi} = 0.25 \text{ Nm/rad}$$

The moment of inertia I of the sphere is

$$I = \frac{2}{5}Mr^2 = \frac{2}{5}(0.4)\left(8 \times 10^{-2}\right)^2 = 1.02 \times 10^{-3} \text{ kg} \cdot \text{m}^2$$

$$\therefore T = 2\pi\sqrt{\frac{I}{\kappa}} = 2\pi\sqrt{\frac{1.02 \times 10^{-3}}{0.25}} = 0.40 \text{ s}$$

Example 8.12

A simple pendulum 60 cm long has a 200-g ball. The pendulum is pulled aside 15° and released. If the timing clock is started just as the ball moves through its lowest position, write the equation of motion for the pendulum in terms of the pendulum angle in degrees.

Solution:

Length of Pendulum $l = 60$ cm $= 60 \times 10^{-2}$ m, amplitude $\theta_m = 15^\circ$.

Now, the angular amplitude θ is given by

$$\theta = \theta_m \text{ Sin } (\omega t + \varphi). \qquad \text{(i)}$$

At time t = 0, θ = 0°. Substituting these values into equation (i) we have

$$0 = 15^\circ \sin (0 + \varphi)$$

$$\therefore \sin \varphi = 0 \qquad \Rightarrow \varphi = 0.$$

Scanned by CamScanner

Equation (i) then becomes

$$\theta = \theta_m \sin(\omega t) = 15^\circ \sin(\omega t).$$

Using $T = 2\pi\sqrt{\frac{l}{g}}$, we have

$$\omega = 2\pi f = \frac{2\pi}{T} = \frac{2\pi}{2\pi\sqrt{\frac{l}{g}}} = \sqrt{\frac{g}{l}} = \sqrt{\frac{10}{60 \times 10^{-2}}} = 4.04 \text{ rad/s}$$

$$\therefore \theta = \theta_m \sin(\omega t + \varphi) = 15^\circ \sin 4.04t.$$

8.6 The Physical Pendulum.

Any rigid body mounted so that it can swing in a vertical plane about some axis passing through it is called a **physical pendulum.**

Fig. 8.9

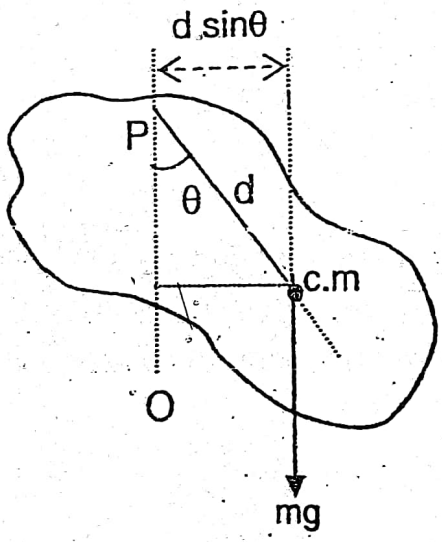

Fig. 8.9 shows an irregular body pivoted about a horizontal frictionless axis through P and displaced from the equilibrium position by an angle θ. The equilibrium position O is that in which the center of mass (c.m) of the body lies vertically below P. Since the force of gravity can be considered as concentrated at the center of gravity, the restoring torque on the object is

$$\Gamma = -mg\, d\sin\theta,$$

where m is the mass of the body and *d* is the distance from the pivot to the center of mass (c.m).

Scanned by CamScanner

For small amplitudes, $\sin\theta = \theta$.

$$\therefore \Gamma = -mgd\theta \qquad (8.17)$$

Now the restoring torque $\Gamma = I\alpha$.

$$\therefore I\alpha = -mgd\theta$$

$$\therefore \alpha = \frac{d^2\theta}{dt^2} = -\frac{mgd}{I}\theta \qquad (8.18)$$

Comparing equation (8.18) with equation (8.15), we get

$$\kappa = mgd$$

as the torsional constant, so that

$$\omega^2 = \frac{\kappa}{I} = \frac{mgd}{I}$$

$$\therefore \omega = \sqrt{\frac{mgd}{I}}$$

$$\therefore T = \frac{2\pi}{\omega} = 2\pi\sqrt{\frac{I}{mgd}} \qquad (8.19)$$

Example 8.13:

A slender uniform rod with a length of 2.0 m is suspended from one end. What is the period of the oscillatory motion that takes place in a vertical plane?

Solution:

Length of the rod $l = 2.0$ m.
The distance of the center of mass from one end is 1.0 m.

$$\therefore d = 1.0 \text{ m}$$

Let the mass of the rod be m.
Then the moment of inertia of the rod about one end is

$$I = \frac{1}{3}ml^2$$

Scanned by CamScanner

From equation (8.19), the period of vibration T is

$$T = 2\pi\sqrt{\frac{I}{mgd}}$$

$$T = 2\pi\sqrt{\frac{\frac{1}{3}ml^2}{mgd}} = 2\pi\sqrt{\frac{l^2}{3dg}} = 2\pi\sqrt{\frac{2^2}{3(1)(9.80)}} = 2.3\text{ s}$$

8.7 Damped Harmonic Motion

Up to this point, we considered only cases of vibrations that are free from any effects that cause energy loss. To analyze a real situation, however, we must take into account the presence of frictional or viscous drag forces, which decrease the amplitude of oscillation.

The decrease in amplitude caused by friction is called ***damping***, and the corresponding motion is called ***damped oscillation***. Often the friction arises from air resistance or internal forces.

The simplest case to analyze is that of a frictional damping force that is directly proportional to the velocity of the oscillating body but directed opposite to it. Then, the frictional damping force F_v has the form

$$F_v = -bv = -b\frac{dx}{dt}$$

and the equation of motion becomes

$$-kx - bv = ma,$$

or

$$m\frac{d^2x}{dt^2} + b\frac{dx}{dt} + kx = 0$$

$$\therefore \frac{d^2x}{dt^2} + \frac{b}{m}\frac{dx}{dt} + \frac{k}{m}x = 0 \qquad (8.20)$$

Scanned by CamScanner

This is a linear second order homogeneous equation with constant coefficients. In operator notation, we write equation (8.20) as

$$\left(D^2 + \frac{b}{m}D + \frac{k}{m}\right)x = 0, \qquad (8.21)$$

where $D(x) = \frac{d(x)}{dt}$ and $D^2(x) = D[D(x)] = \frac{d^2x}{dt^2}$.

By suppressing x, equation (8.21) can be written as

$$D^2 + \frac{b}{m}D + \frac{k}{m} = 0 \qquad (8.22)$$

Let the roots of equation (8.22) be r_1 and r_2. Then

$$D^2 + \frac{b}{m}D + \frac{k}{m} = (D - r_1)(D - r_2) = 0,$$

and equation (8.21) can now be written as

$$(D - r_1)(D - r_2)\,x = 0 \qquad (8.23)$$

Let $(D - r_2)x = u$. (8.24)

Equation (8.23) then becomes

$$(D - r_1)u = 0. \qquad (8.25)$$

$$\therefore Du - r_1u = 0$$

or

$$\frac{du}{dt} = r_1u.$$

Rearranging, we have

$$\frac{du}{u} = r_1dt$$

Integrating both sides we get

$$\ln u = r_1t + c_1$$

Scanned by CamScanner

This last equation is the same as

$$\text{Log}_e u = r_1 t + c_1$$

$$\therefore u = e^{(r_1 t + c_1)} = e^{r_1 t}.e^{c_1} = C_1 e^{r_1 t}$$

$$\therefore u = C_1 e^{r_1 t} \qquad (8.26)$$

where $C_1 = e^{c_1}$.

With the help of equation (8.26), equation (8.24) becomes

$$(D - r_1)x = C_1 e^{r_1 t}$$

$$\therefore \quad \left(\frac{d}{dt} - r_2\right)x = C_1 e^{r_1 t} \qquad (8.27)$$

Now, a differential equation of the type

$$\frac{dy}{dt} + P(t)y = Q(t), \qquad (8.28a)$$

which is called ***linear first order differential equation***, has solution given by

$$\rho y = \int \rho\, Q(t)dt + C, \qquad (8.28b)$$

where the integrating factor ρ is defined by

$$\rho = e^{\int P(x)dx} \qquad (8.29)$$

Thus, from equation (8.27),

$$P(t) = -r_2,\ Q(t) = C_1 e^{r_1 t}.$$

$$\therefore \rho = e^{\int P(t)dt} = e^{\int(-r_2)dt} = e^{-r_2 t}.$$

Solution of equation (8.27), according to (8.28b), is therefore

$$e^{-r_2 t} x = \int e^{-r_2 t} C_1 e^{r_1 t} dt + C_2 = C_1 \int e^{(r_1 - r_2)t} dt + C_2$$

$$\therefore e^{-r_2 t} x = C_1 \int e^{(r_1 - r_2)t} dt + C_2 \qquad (8.30)$$

How we proceed at this point depends on the nature of r_1 and r_2.

Scanned by CamScanner

Case 1:

If $r_1 \neq r_2$, integration of equation (8.30) gives

$$e^{-r_2 t}x = \frac{C_1}{r_1 - r_2} e^{(r_1 - r_2)t} + C_2 \qquad (8.31a)$$

Since C_1 is an arbitrary constant, so is $\frac{C_1}{r_1 - r_2}$.

Let $\frac{C_1}{r_1 - r_2} = C'_1$

Then equation (8.31a) becomes

$$e^{-r_2 t}x = C'_1 e^{(r_1 - r_2)t} + C_2$$

$$\therefore x = C'_1 e^{r_1 t} + C_2 e^{r_2 t} \qquad (8.31b)$$

Case 2:

If $r_1 = r_2$, equation (8.30) reduces to

$$e^{-r_2 t} x = C_1 \int e^0 dt + C_2 = C_1 t + C_2$$

$$\therefore x = (C_1 t + C_2)e^{r_2 t} \qquad (8.31c)$$

Case 3:

If the roots r_1 and r_2 are complex conjugate numbers, we can write

$$r_1 = \alpha + i\beta, \; r_2 = \alpha - i\beta$$

where $\beta \neq 0$.

The solution given by equation (8.31b) can now be written as

$$x = C'_1 e^{(\alpha + i\beta)t} + C_2 e^{(\alpha - i\beta)t}$$

$$\therefore x = e^{\alpha t}\left[C'_1 e^{i\beta t} + C_2 e^{-i\beta t}\right] \qquad (8.32a)$$

Substituting $e^{i\beta t} = \cos\beta t + i\sin\beta t$ and $e^{-i\beta t} = \cos\beta t - i\sin\beta t$ in equation (8.32a), we get

$$x = e^{\alpha t}\left[(C'_1 + C_2)\cos\beta t + i(C'_1 - C_2)\sin\beta t\right] \qquad (8.32b)$$

Scanned by CamScanner

Putting $C_3 = C'_1 + C_2$, and $C_4 = i(C'_1 - C_2)$, we have

$$x = e^{\alpha t}\left[C_3 \operatorname{Cos}\beta t + C_4 \operatorname{Sin}\beta t\right] \tag{8.33}$$

Now, the solutions of equation (8.22) are:

$$D = r = \frac{-\frac{b}{m} \pm \sqrt{\left(\frac{b}{m}\right)^2 - 4\left(\frac{k}{m}\right)}}{2}$$

$$= \frac{-b}{2m} \pm \sqrt{\left(\frac{b}{2m}\right)^2 - \frac{k}{m}} \tag{8.34}$$

If b is small, the roots are thus

$$r_1 = \frac{-b}{2m} + \sqrt{\left(\frac{b}{2m}\right)^2 - \frac{k}{m}} = \frac{-b}{2m} + i\sqrt{\frac{k}{m} - \left(\frac{b}{2m}\right)^2} \tag{8.35}$$

$$r_2 = \frac{-b}{2m} - \sqrt{\left(\frac{b}{2m}\right)^2 - \frac{k}{m}} = \frac{-b}{2m} - i\sqrt{\frac{k}{m} - \left(\frac{b}{2m}\right)^2} \tag{8.36}$$

Since r_1 and r_2 are assumed to be complex conjugate numbers, i.e

$$r_1 = \alpha + i\beta, \quad r_2 = \alpha - i\beta,$$

we have, by comparison with equations (8.35) and (8.36),

$$\alpha = \frac{-b}{2m}, \qquad \beta = \sqrt{\frac{k}{m} - \left(\frac{b}{2m}\right)^2}.$$

The solution given by equation (8.33) now becomes

$$x = e^{\frac{b}{2m}t}\{C_3 \cos\omega' t + C_4 \sin\omega' t\} \tag{8.37}$$

where

$$\omega' = \beta = \sqrt{\frac{k}{m} - \left(\frac{b}{2m}\right)^2} \tag{8.38}$$

Scanned by CamScanner

Equation (8.38) gives the angular frequency of oscillation for an oscillator in the presence of small frictional force bv.

If at $t = 0$, the initial displacement is A, equation (8.37) gives

$$A = e^{0}\{C_3 \cos 0^{\circ} + C_4 \sin 0^{\circ}\} = C_3$$

Equation (8.37) becomes

$$x = A e^{-\frac{b}{2m}t} \cos \omega' t \qquad (8.39)$$

Equation (8.39) is the solution to the differential equation given by equation (8.20), if b is small.

We can interpret the solution given by equation (8.39) as follows:

(i) The amplitude factor $A e^{-\frac{b}{2m}t}$ is not constant but decreases exponentially in accordance with the factor $e^{-\frac{b}{2m}t}$. The time interval during which the amplitude drops to $\frac{1}{e}$ of its initial value is called the ***mean life time*** of the oscillation τ.

Thus, at $t = \tau$,

$$A e^{-\frac{b}{2m}\tau} = A e^{-1}.$$

$$\therefore -\frac{b}{2m}\tau = -1$$

$$\therefore \text{mean life time } \tau = \frac{2m}{b}$$

(ii) The new frequency ω', according to equation (8.38), is shifted away from the undamped value, $\omega = \sqrt{\frac{k}{m}}$, by an amount $\frac{b^2}{4m^2}$ which depends on the force coefficient b.

Scanned by CamScanner

If b = 0, which corresponds to frictionless case, $\frac{b}{2m} = 0$ and $\omega' = \omega$.

For real value of ω', the quantity within the radical sign of equation (8.38) must be positive. This requires that $\frac{b^2}{4m^2} < \frac{k}{m}$.

When $\frac{b^2}{4m^2} \geq \frac{k}{m}$, the solution does not represent oscillatory motion. The special condition when $\frac{b^2}{4m^2} = \frac{k}{m}$ leads to a type of nonoscillatory motion called ***critical damped motion***. The solution of equation (8.20) in this case is given by equation (8.31c), where $r_2 = \frac{-b}{2m}$:

$$x(t) = \left(C'_1 t + C_2\right) e^{r_2 t} \qquad \textit{critical damping} \qquad (8.40)$$

The condition $\frac{b^2}{4m^2} > \frac{k}{m}$, also leads to nonoscillatory motion, this time referred to as ***overdamped***. The solution to equation (8.20) is then

$$x(t) = e^{\alpha t}\left[C'_1 e^{i\beta t} + C_2 e^{-i\beta t}\right] \qquad \textit{overdamped} \qquad (8.41)$$

The constants C'_1 and C_2 are to be determined from the initial conditions.

Problems Set 8

1. A spring makes 12 vibrations in 40 s. Find the period and frequency of the vibration.
   Answer. T = 3.3 s, f = 0.30 Hz

2. A 50g mass hangs at the end of a Hookean spring. When 20 g more are added to the end of the spring, it stretches 7.0 cm more.
   (a) Find the spring constant.
   (b) If the 20 g are now removed, what will be the period of the motion?

   Answer: (a) k = 2.8 N/m (b) T = 0.84 s.

Scanned by CamScanner

3. A body describing SHM has a maximum acceleration of 8π m/s^2 and a maximum speed of 1.6 m/s. Find the period T and the amplitude A.

Answer: T = 0.4 s, A = 0.102 m.

4. A block of mass 2 kg hangs from a spring of force constant k = 800 N/m. The block is pulled 20 cm from equilibrium and released.
   (a) What are the amplitude, angular frequency, and period of the motion?
   (b) What are the velocity and acceleration of the block when it is 12 cm from equilibrium?

Answer: (a) A = 20 cm, ω = 20 rad/s. (b) v = ± 320 cm/s, a = 14800 cm/s^2

5. A block of mass 4 kg hangs from a spring of force constant k = 400 N/m. The block is pulled down 15 cm below equilibrium and released.
   (a) Find the amplitude, frequency, and period of the motion.
   (b) Find the kinetic energy when the block is 10 cm above equilibrium.

Answer: (a) A = 0.15 m, ω = 10 rad/s, $f = \frac{5}{\pi}$ Hz, $T = \frac{\pi}{5}$ s (b) K.E = 2.5 J.

6. The equation of motion for a mass at the end of a particular spring is

$$y = 0.30 \cos 0.50\, t$$

Find the displacement, velocity, and acceleration of the mass at
(a) t = 0 and (b) t = 3.0 s

Answer: (a) y = 0.3 m, v = 0, and a = – 0.075 m/s^2.
(b) y = 0.021 m, v = – 0.150 m/s, a = – 0.0053 m/s^2

Scanned by CamScanner