OWL-MD400 ICD

Version: 1.2

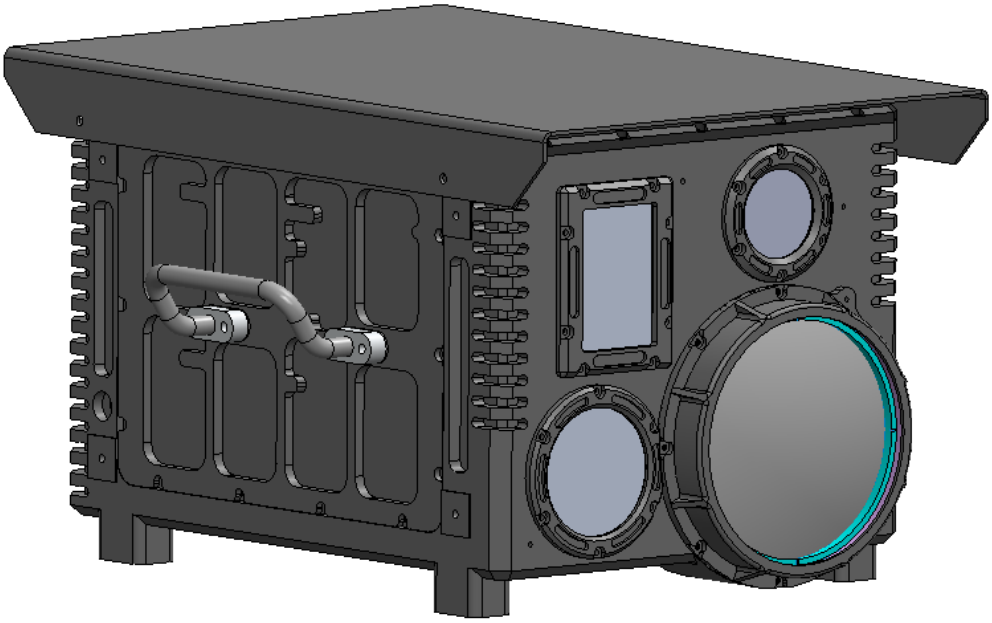

© Copyright 2019 Analinear Imaging Systems Pvt Ltd. All Rights Reserved.

www.analinear.com

Document Information

S.No	Item	Details
1.	Type of Doc:	Interface Control Document
2.	Document Number	-
3.	Product Code/Model Number	AOSVES23-BC0EE00
4.	Date of release	15/11/2025

Revision History

Revision No	Prepared By	Revision Date	Verified By	Remarks
1.0	Rakesh	30-10-2025	Mahesh	Initial Draft
1.1	Mahesh	14-11-2025		Updated Mechanical ICD
1.2	Prasad	23-12-2025		Tracker commands are included

Table Of Contents

1. Purpose Of the Document 9
2. Introduction 10
3. OWL-MD400 Interfaces 11
3.1. Electrical Interfaces 11
3.1.1. Power, Ethernet & RS422 Interface Connector 12
3.1.2. HD-SDI Video Output 13
4. **Mechanical Drawings** 14
5. Software Command Protocol 15
5.1.1. Command Protocol 15
5.1.2. Status Byte 16
5.1.3. Command Table 17
Appendix – I 30
1. Telemetry Data 30
2. Thermal Controls 33
3. LRF Controls 34

List Of Figures

Figure 1:Electrical interfaces 11
Figure 2: Ethernet & RS422 Connector for Camera Controller 12
Figure 3:SDI Video Output Connector 13
Figure 4: Mechanical Dimension 14

List Of Tables

Table 1: Power, Ethernet & RS422 Pin Description of Camera 12
Table 2:Pin Description of SDI Connector 13
Table 3: Packet Description from Host to Core 15
Table 4: Protocol description from Core to Host 16
Table 5: Status Byte 16
Table 6: Command Table 19
Table 7: Thermal Camera Command Table 22
Table 8: Thermal Lens Command Table 23
Table 9: Day Low Light Command Table 24
Table 10: Day Low Light Lens Command Table 25
Table 11 : Day Normal Command Table 26
Table 12: Day Normal Lens Command Table 26
Table 13: LRF Command Table 27
Table 14: Tracker Commands Table 29

Analinear Trademarks and Copyright Information

Analinear Imaging Systems Pvt Ltd is disclosing this user guide, manual, release note, and/or specification (the "Documentation") to you solely for use in the development of designs to operate with Analinear hardware devices. You may not reproduce, distribute, republish, download, display, post, or transmit the Documentation in any form or by any means including, but not limited to, electronic, mechanical, photocopying, recording, or otherwise, without the prior written consent of Analinear. Analinear expressly disclaims any liability arising out of your use of the Documentation. Analinear reserves the right, at its sole discretion, to change the Documentation without notice at any time. Analinear assumes no obligation to correct any errors contained in the Documentation, or to advise you of any corrections or updates. Analinear expressly disclaims any liability in connection with technical support or assistance that may be provided to you in connection with the Information.

The documentation is disclosed to you "as-is" with no warranty of any kind. Analinear makes no other warranties, whether express, implied, or statutory, regarding the documentation, including any warranties of merchantability, fitness for a particular purpose, or non-infringement of third-party rights. In no event will Analinear be liable for any consequential, indirect, exemplary, special, or incidental damages, including any loss of data or lost profits, arising from your use of the documentation.

© Copyright 2019 Analinear Imaging Systems. All Rights Reserved.

ABBREVIATIONS

ICD	Interface Control Document
CMOS	Complementary Metal Oxide Semiconductor
LVDS	Low Voltage Differential Signaling
IR	Infrared
IRFPA	Infrared Focal Plane Array Technology
FPS	Frame Per Second
NC	Not connected
FPA	Focal Plane Array
JTAG	Joint Test Action Group
IO	Input/output
RS232	Recommended Standard 232 protocol
EXT_SYNC	External Sync
CLK	Clock
Trig in/out	Trigger In /Trigger Out
UART	Universal Asynchronous Receiver-Transmitter
1-NUC	1 Point Non-Uniformity Correction
MC	Master Clock
VGA	Video Graphics Array
QVGA	Quarter Video Graphics Array
NRST	Asynchronous Reset
AGC	Automatic Gain Control
ROI	Region of Interest
BPR	Bad Pixel Replacement
RD	Read
WR	Write
Day 1	Day Low Light
Day 2	Day Normal

1. Purpose Of the Document

This document gives a brief description of the Electrical specifications, Mechanical drawings used to Integrate the OWL-MD400 system.

2. Introduction

OWL-MD400 is a multi-Sensor system, which consists of a HD-Day Camera, Low Light Day Camera, MWIR Camera and LRF. Typical specification of the OWL-MD400 is given in the table below

3. OWL-MD400 Interfaces

OWL-MD400 interfaces are divided in to following categories

- Electrical Interface
- Communication Interface &
- Mechanical interface

3.1. Electrical Interfaces

OWL-MD400 system has three main interface connectors as shown in the picture below

1. Power, Ethernet and RS422 Interface Connector
2. HD-SDI Video Output Connector

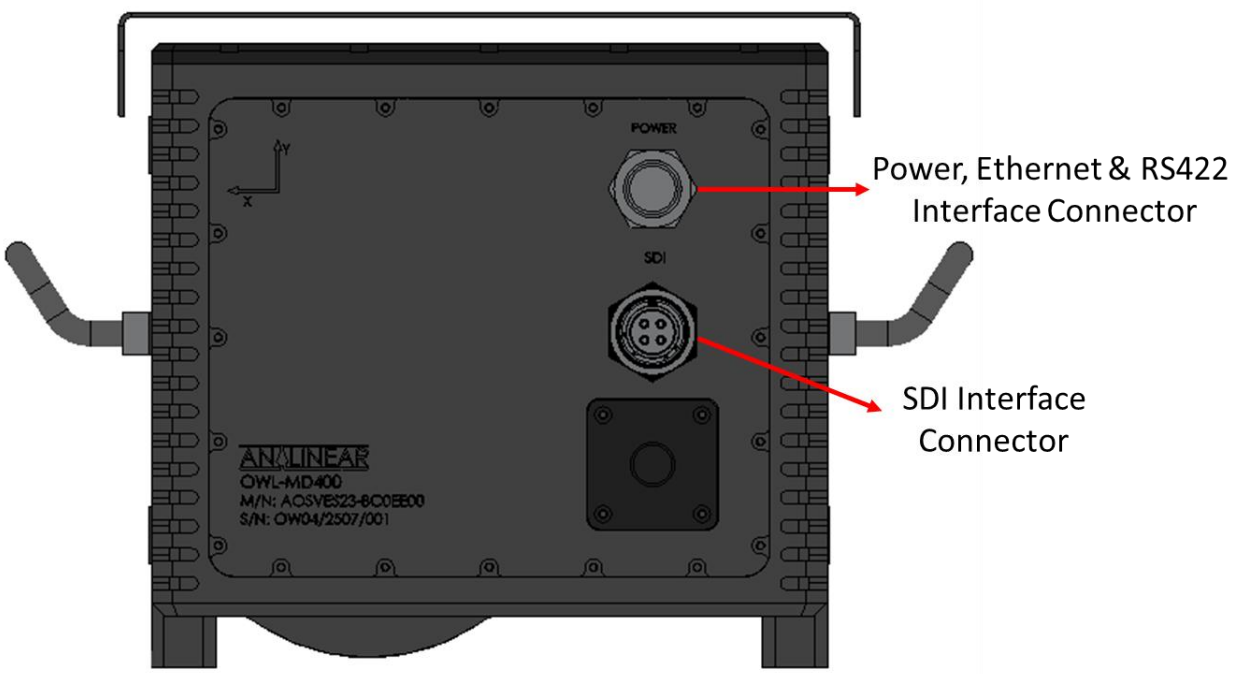

Figure 1:Electrical interfaces

3.1.1. Power, Ethernet & RS422 Interface Connector

Power, Ethernet & RS422 Interface connector has Power, Ethernet & RS-422 Connections which is given in the table below

Figure 2: Ethernet & RS422 Connector for Camera Controller

S. NO	PIN Number	Function	Colour Code	I/O	Description
1	1	DA+	Orange White	I/O	Ethernet DA+
2	2	DA-	Orange	I/O	Ethernet DA-
3	3	DB+	Green White	I/O	Ethernet DB+
4	4	DC+	Blue	I/O	Ethernet DC+
5	5	DC-	Blue white	I/O	Ethernet DC -
6	6	DB-	Green	I/O	Ethernet DB-
7	7	DD+	Brown White	I/O	Ethernet DD +
8	8	DD-	Brown	I/O	Ethernet DD -
9	9	NC		I/O	Not connected
10	10	NC		I/O	Not connected
11	11	Power	Red	I	24V
12	12	Power	Blue	I	24V
13	13	Power	Yellow	I	24V
14	14	Camera RS422_TX+	Blue(4Core)	O	RS-422 Camera TX+
15	15	Camera RS422_TX-	Red(4Core)	O	RS-422 Camera TX-
16	16	Camera RS422_RX+	Yellow(4Core)	I	RS-422 Camera RX+
17	17	Camera RS422_RX-	Black(4Core)	I	RS-422 Camera RX-
18	18	Ground	White	I	0V
19	19	Ground	White	I	0V
20	20	Ground	White	I	0V
21	21	NC		X	Not connected
22	22	NC		X	Not connected

Table 1: Power, Ethernet & RS422 Pin Description of Camera

3.1.2. HD-SDI Video Output

Pin description of **HD-SDI Video Output** connector is given in the table below

Figure 3:SDI Video Output Connector

S. NO	PIN Number	Function	I/O	Description
1	A	HD-SDI	Output	TI/Day Camera
2	B	NC		Not connected
3	C	NC		Not connected
4	D	NC		Not connected

Table 2:Pin Description of SDI Connector

4. Mechanical Drawings

Mechanical 2D drawing is shown below

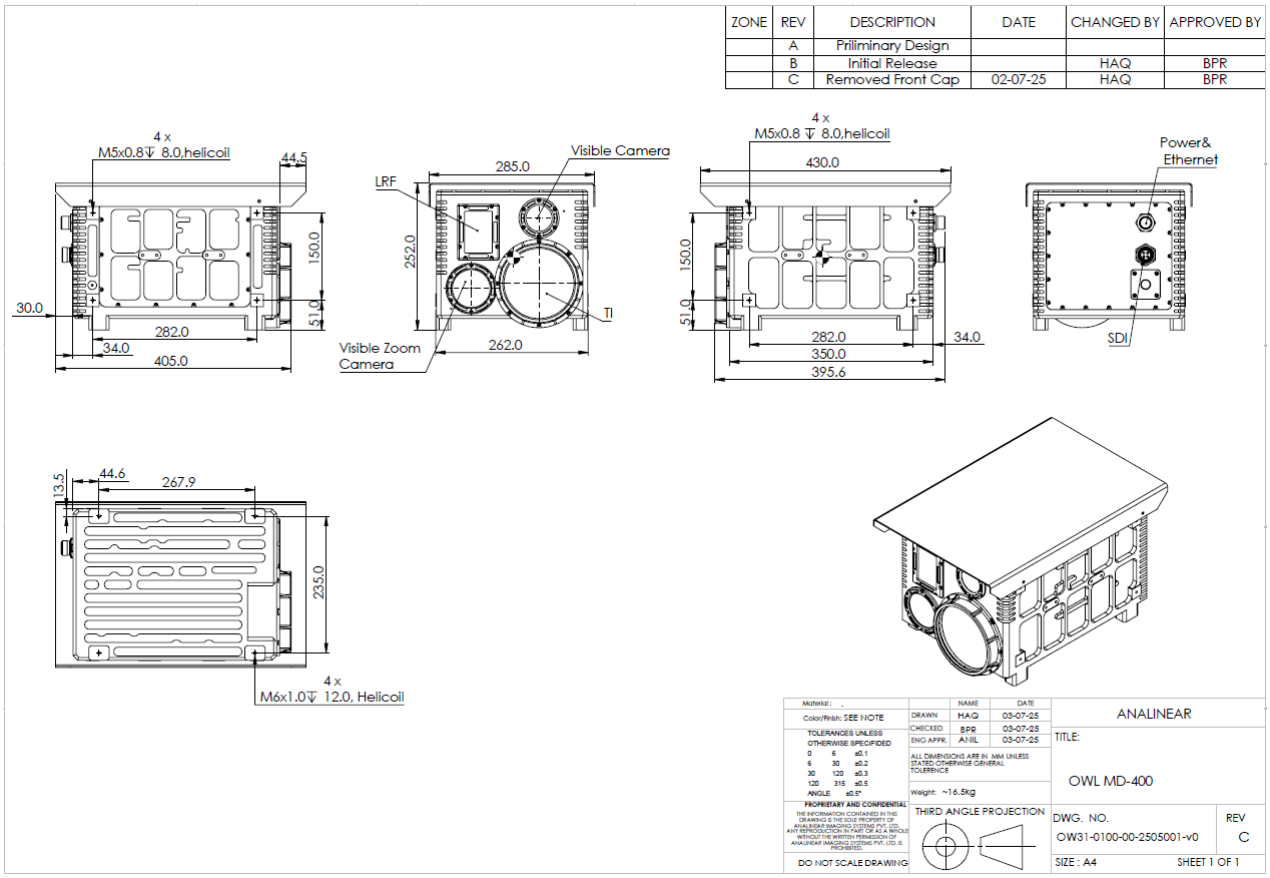

Figure 4: Mechanical Dimension

Weight – 14.8Kg (System including Sunshade)

5. Software Command Protocol

5.1.1. Command Protocol

UART Port settings like Baud Rate, No of Bits and Parity are given below

- BAUD RATE : 115200
- DATA BITS : 8
- STOP BIT : 1
- Parity : None

TCP Client socket settings like IP Address and Port are given below

- IP Address : 192.168.8.238(Default IP Address)
- Port : 8088

Before sending any commands with the camera in Normal mode, communication must be established between the host and device.

To achieve this, ***the host must send a Liveliness command to the* device *and receive the appropriate response (0x00) as a second byte.*** After this handshake occurs, the host can now send commands as described in this section.

Each command consists of 6 fields. These fields are defined in the HOST to Device table. Note that all fields have a fixed length except for the Data field. The length of the Data field depends on the Command and Address fields. In order to ensure that data is received by the camera, the camera sends a response back to the host. This response is called an acknowledgement packet. The definition of the acknowledgement packet is shown in the Device to Host table.

Host to Core				
FIELD	**DESCRIPTION**	**VALUE**	**BYTE COUNT**	**Remarks**
Header	Start of Packet	0XCC	1	
R/W	Command - Read/Write	R-0x52, W-0x57	1	R, W-ASCII
CMD/Address	Command Type and Address		3	1st Byte Defines the Interface 0x00: Control Configuration 0x01: Thermal Interface 0x03: LRF Interface 0x0A: Day Interface 2nd and 3rd Bytes define the Address to be configured
MSL	Message Length	# Of bytes in Data field	2	0-65535 This Field will be 0x0000 for the Read Command
DATA	Data to be sent	Data	1024 Max	This Field is not applicable for the Read Command
CRC	Cyclic Redundancy Check (X-Modem)	0-65535	2	

Table 3: Packet Description from Host to Core

Core to Host				
FIELD	**DESCRIPTION**	**VALUE**	**BYTE COUNT**	**Remarks**
HEADER	Start of Packet	0xCC	1	
ACK	Command - Read/Write	Status Byte	1	Refer to Status Byte Table
CMD/Address	Command Type and Address		3	1st Byte Defines the Interface 0x00: Control Configuration 0x01: Thermal Interface 0x03: LRF interface 0x05: SWIR Interface 0x0A: Day Interface 2nd and 3rd Bytes define the Address to be configured
MSL	Message Length	# Of bytes in Data field	2	0-65535
DATA	Data to be sent	Data	1024 Max	Depends on Command
CRC	Cyclic Redundancy Check (X-Modem)	0-65535	2	

Table 4: Protocol description from Core to Host

5.1.2. Status Byte

The status byte is the second byte of the response from the Core to Host. It indicates the status of the previous incoming message packet.

STATUS DESCRIPTION	
ACK(HEX)	**Description**
0x00	OK
0x01	TIMEOUT_ERROR
0x02	BAD_HEADER
0x03	CHECKSUM_ERROR
0x04	BYTE_COUNT_ERROR
0x05	BAD_RDWR
0x06	BAD_CMD
0x07	CMD_NOT_SUPPORTED
0x08	NOT_VALID
0x09	FAILED
0x0A	INVALID_RANGE
0x0B	INVALID_IP
0x0C	INVALID_SUBNETMASK
0x0D	OUT_OF_MEMORY

Table 5: Status Byte

5.1.3. Command Table

To allow data transfer between the host and the camera,

- In case of UART Interface: Make sure that the baud rate of the camera is the same as the baud rate of the host's configurations.
- In case of TCP: Make sure that TCP client is connected with correct Ip and port same as host

Each command has a function code ID which is unique. The number of bytes sent with the command packet depends on the command as specified in tables given below

If there are bits in a command marked as "Factory reserved", the values of these bits must not be modified. When writing to these registers, preserve the factory default values of these bits.

Control Configuration						
CMD ID	**Address**	**Command**	**Byte Count**	**Description**	**Read/Write**	**Default**
0x00	0x0001	Liveliness_Check	1	Check for Liveliness. Returns 01 if success	RD	-
0x00	0x0004	Telemetry_Data	1	1BYTE: 01: On, 02: Off. If Telemetry Data is on, then 40 Bytes continuous data will be streamed out on Serial port 1 Byte: Version. 2 BYTES: LRF Range. 4 Bytes: Thermal Reticle coordinates. 1 Byte: Thermal FOV. 4 Bytes: Day Reticle coordinates. 1 Byte: Day FOV. 4 Bytes: Reserved 1 Byte: Reserved. 2 Bytes: Processor Temperature. **Note: Refer** Table 15: Telemetry Data	WR	0x02
0x00	0x0009	Network_Settings	13	Network setting details. 1BYTE: Mode(0x01-DHCP/0x02-Static), 4BYTES: IpAddress. Valid only if mode set to static (for 192.168.8.177 valid input is 0xC0A808B1), if DHCP pass 0x00000000 4BYTES: Subnet Mask. Valid only if mode set to static (for 255.255.255.0 valid input is 0xFFFFFF00), if DHCP pass 0x00000000 4BYTES: Gateway. Valid only if mode set to static (for 192.168.0.1 valid input is 0xC0A80001), if DHCP pass 0x00000000	RD/WR	0x02C0A808B1FFFFFF00C0A80001
0x00	0x000A	Get_RTSP_URL	256	Max Bytes 256. Byte size will be changed based on output data. Returned byte array will be ASCII equivalent hexa data.	RD	-
0x00	0x000B	Restart	1	Restart the Payload/service 1Byte: 0x01-Payload/0x02-Service	WR	-
0x00	0x000C	Date_Time	20	Returned byte array will be ASCII equivalent hexa data. Data will be separate with ';'. Sequence of data will be 'YYYY-MM-DD;HH:MM:SS;'	RD	-
0x00	0x000D	Date_Time_Setup	256	Max Bytes 256. Byte size will be changed based on output data. Byte array will be ASCII equivalent hexa data. Data will be separate with ';'. Set Date and time of camera manually or using NTP Server. 1BYTE: 0x01-Manual/0x02-NTPServer 255 BYTES: If Manual 'YYYY-MM-	RD/WR	-

				DD;HH:MM:SS;', else if NTP 'URL'(i.e., 0.in.pool.ntp.org/192.168.8.10)		
0x00	0x000F	Product_Info	256	Max Bytes 256. Byte size will be changed based on output data. Returned byte array will be ASCII equivalent hexa data. Data will be separate with ';'. Sequence of data will be Product_Name;Location;Manafacturer;HardwareId;Model,Firmware_Version;SerialNumner; Thermal_FV;SWIR_FV;	RD	-
0x00	0x0010	Temperature	2	Read Temperatures, Divide output values with 100. 2BYTE: System Temperature.	RD	-
0x00	0x0013	Sync_Mode	1	Set/Get Sync Mode. 1Byte:0x01-ON;0x02-Off	RD/WR	0x02
0x00	0x0014	Sync_Mode_Fov	1	Set Sync Mode FOV. Range 1 to 5 Note: Valid only if Sync_Mode is enabled	WR	0x01
0x00	0x0019	Pwr_Ctrl_Day	1	Set/Get Day Camera ON/OFF/Reboot;1Byte: 0x01-ON,0x02-OFF,0x03-Reboot	RD/WR	0x01
0x00	0x001A	Pwr_Ctrl_Mwir	1	Set/Get MWIR Camera ON/OFF/Reboot;1Byte: 0x01-ON,0x02-OFF,0x03-Reboot	RD/WR	0x01
0x00	0x002E	OSD	1	Set/Get OSD.1Byte:0x01-On,0x02-Off	RD/WR	0x02
0x00	0x002F	PIP	1	Set/Get PIP.1Byte:0x01-On,0x02-Off	RD/WR	0x02
0x00	0x0030	PIP_Location	1	Set/Get PIP.1Byte: 0x01-Top Left, 0x02-TopRight, 0x03-Bottom Left, 0x04-Bottom Right		

Table 6: Command Table

Thermal Interface						
CMD ID	**Address**	**Command**	**Byte Count**	**Description**	**Read/Write**	**Default**
0x01	0x0002	Config_Control	1	Camera Configuration Control. Save the current configurations as default configurations for next Power ON. 0x01 to Save the Configuration	WR	0x00
0x01	0x0003	Int_Time	2	Integration Time in microseconds. Multiply value with 1000 and pass as input (i.e, to set 0.005 send 5). Range 1ms to 16ms in steps of 0.001. **Note: By default, calibration is done for 5 and 8ms** **Note: In case if the integration time is other than above mentioned value, then it is mandatory to do one-point NUC.**	RD/WR	0x05
0x01	0x0005	Video_Polarity	1	Set/Get polarity of Image. White_Hot/Black_Hot. 1BYTE: Polarity (White_Hot/Black_Hot) 0x01-White_Hot, 0x02-Black_Hot	RD/WR	0x01
0x01	0x0006	UnSharpenEn	1	Set/Get Sharpen of Image 1Byte: 0x01-Enable,0x02-Disable	RD/WR	0x01
0x01	0x0007	Noise_Filter	1	Set/Get Smoothen of image. 1BYTE: Mode (True/False) 0x01-True, 0x02-False	RD/WR	0x02
0x01	0x0008	Do_1NUC	1	Do 1-NUC on Image. 1BYTE: 0x01 to Do-INUC **Note: User should provide a constant uniform field covering the complete lens to do the 1-NUC** **Note: Make sure Enable_1NUC (i.e., 0x000F) bit is enabled to reflect the one NUC corrected image.**	WR	0x00
0x01	0x0009	AGC_Type	1	AGC Algorithm 1BYTE: Type (Auto/Manual) 0x01- Reserved, 0x02- Reserved, **0x03- Local DRC**, 0x04-Reserved 0x05-Reserved **0x06-Auto-Bright** 0x07- Reserved 0x08-Reserved 0x09-Reserved 0x0A-Reserved **0x0B-Enhance** **0x0C-Normal** **0x0D- Local Enhance** **In Local DRC:** User can adjust the contrast using Plateau Register(i.e.,0x000A)	RD/WR	0x0C

				In Auto-Bright Mode: User can adjust the contrast using Contrast Register(i.e.,0x000C) **In Enhance Mode:** User can set ROI using ROI_EnhanceMode Register (0x0024), it will change the contrast based on selected ROI **In Normal Mode:** User can adjust the contrast using NormalModeTh Register(i.e.,0x0022)		
0x01	0x000A	Plateau	2	Set/Get Plateau value of image. Range 1 to 510 in steps of 1. Valid only if AGC Type is set to Clahe Mode	RD/WR	0x46
0x01	0x000B	Brightness	1	Set/Get Brightness value of image. Range 1 to 255 in steps of 1 **Note: Recommended value is between 100-128. Valid only if the ITT mean(0x001B) is enabled**	RD/WR	0x7F
0x01	0x000C	Contrast	1	Set/Get Contrast value of image. Range 1 to 255 in steps of 1. Valid only if AGC Type is set to Auto-Bright and Once-Bright modes	RD/WR	-
0x01	0x000F	Enable_1NUC	1	Set NUC Enable 1BYTE: Mode (True/False) 0x01-True, 0x02-False.	RD/WR	0x02
0x01	0x0015	ALL_NUC	1	Set NUC for all FOVS; 1 Byte:0x01 **Caution**: User should keep the uniform source in front of Thermal Camera. This process takes more than 3 minutes and no other commands should be sent in between during the process. This Process does the 1-NUC calibration for different Gains, Different Integration Times and for all the 9 FOV's	WR	0x00
0x01	0x001B	ITT_Mean_En	1	Set/Get ITT_Mean_En. 1Byte: 0x01-Enable, 0x02-Disable	RD/WR	0x02
0x01	0x001D	UnSharpening Filter Weight	1	Set/Get Sharpening Weight. Range:0-255 Valid only if UnSharpenEn Register(0x0006) is enable	RD/WR	0x1E
0x01	0x001F	Brightness_Bias	2	Set/Get Brightness_Bias;Range = -255 to +255 Valid only if AGC Type is set to Once-Bright Mode	RD/WR	0x00

0x01	0x0020	AGCFilterMode	1	Set/Get AGCFilter En/Dis 1Byte:0x01-Enable;0x02-Disable	RD/WR	0x01
0x01	0x0021	AGCFilterValue	1	Set/Get AGC Filter Value; 1Byte:0-255	RD/WR	0x7F
0x01	0x0022	NormalModeTh	1	Set/Get NormalMode Threshold Value; 1Byte:0-255 Valid only if AGC Type is set to Normal Mode	RD/WR	0x0D
0x01	0x0029	DigitalZoom	1	Set/Get DigitalZoom 1Byte:10-80 for 1x-8x continuous zoom	RD/WR	0x01
0x01	0x0024	ROI_EnhanceMode	8	Set/Get ROI_EnhanceMode 8Bytes:2Bytes TopX,2Bytes TopY,2Bytes BottomX,2Bytes BottomY Valid only if AGC Type is set to Enhance Mode	RD/WR	0x00640064016400E4

Table 7: Thermal Camera Command Table

Thermal Lens Control						
CMD ID	**Address**	**Command**	**Byte Count**	**Description**	**Read/Write**	**Default**
0x01	0x0100	Zoom	3	Zoom command by Passing mode. 1BYTE: Mode (Continuous/Manual) 0x01-Continuous, 0x02-Manual. 1BYTE: (In/Out) 0x01-In, 0x02-Out. 1BYTE: Reserved (i.e., send 0x01) **Note: Lens_Stop Command need to send to stop the continuous Zoom In/Out**	WR	-
0x01	0x0101	Focus	3	Focus command by Passing mode. 1BYTE: Mode (Continuous/Manual) 0x01-Continuous, 0x02-Manual. 1BYTE: (Far/Near) 0x01-Far, 0x02-Near. 1BYTE: Reserved(i.e., send 0x01) **Note: Lens_Stop Command need to send to stop the continuous Focus Far/Near**	WR	-
0x01	0x0102	Lens_Stop	1	Stop command for Lens control by Passing mode. 1BYTE: Mode (Zoom/Focus) 0x01-Zoom, 0x02-Focus	WR	-
0x01	0x0103	AutoFocus	1	Set Auto Focus. 1Byte:0x01	WR	-
0x01	0x0104	FOV	1	Set/Get FOV. Range 1 to 9	RD/WR	0x01
0x01	0x0105	Lens_StepVal	2	Set/Get lens step value. Range 1 to 12000. Valid only for Manual Zoom/Focus.	RD/WR	0x64
0x01	0x0108	Lens_Temp	1	Get Lens Temperature. 1 Byte: -127 to 128; If the value is >128 indicate negative value(i.e., if value is 0xFE indicate -2deg)	RD	-
0x01	0x0109	Zoom_Speed	1	Set/Get Zoom Speed. Range:0-7 Note: Speed range is valid for only Continuous zoom	RD/WR	0x04

0x01	0x010A	Focus_Speed	1	Set/Get Focus Speed. Range:0-7 Note: Speed range is valid for only Continuous focus	RD/WR	0x04

Table 8: Thermal Lens Command Table

Day Low Light Interface						
CMD ID	**Address**	**Command**	**Byte Count**	**Description**	**Read/Write**	**Default**
0x09	0x0002	Exposure_Compensation	1	Set Exposure Compensation On/Off 1BYTE: 0x01-On,0x02-Off	WR	02
0x09	0x0003	Exposure_Comp_Level	1	Set Exposure Up/Down/Reset, Valid only if Exposure_Compensation set to ON. 1BYTE: Exposure Level (Up/Down/Reset) 0x01-Up, 0x02-Down, 0x03-Reset	WR	NULL
0x09	0x0004	ICR_Mode	1	Auto ICR. 1BYTE: Auto ICR (Auto/Manual) 0x01-Auto, 0x02-Manual.	RD/WR	01
0x09	0x0005	Ircut_Filter	1	Set/Get Ircut Filter Mode, Is valid only if ICR_Mode is set to Manual 1BYTE: Mode (On/Off) 0x01-On, 0x02-Off.	RD/WR	02
0x09	0x0006	Noise_Reduction	1	Set Noise Reduction 1BYTE: 0-5:Noise levels	RD/WR	00
0x09	0x0007	Video_Orientation	1	Set Video Orientation 1BYTE: 0x01-Normal,0x02-Invert,0x03-Revert,0x04-Invert_Revert	RD/WR	01
0x09	0x0008	White_Balance_Mode	1	Set/Get White Balance Mode 1BYTE: 01:Auto ; 02: Outdoor	RD/WR	01
0x09	0x000A	WDR_Mode	1	Set/Get WDR Enable/Disable 1BYTE: 0x01-On, 0x02-Off	RD/WR	01
0x09	0x000B	Auto_Exposure	1	Set/Get Auto_Exposure_Modes. 1BYTE: Mode 01:Auto;02:Manual;03:Shutter_Priority;04:Iris_Priority;05:Bright	RD/WR	01
0x09	0x000C	Exposure_Mode	2	AutoExposure Mode Setting for Day Camera. Valid only if Auto_Exposure set to Manual. 1BYTE: Mode (Iris/Gain/Shutter) 0x01:Iris;0x02:Gain;0x03:Shutter; 1BYTE: 0x01:Up,0x02-Down,0x03-Reset	WR	NULL
0x09	0x000D	Defog	1	Set/Get Defog On/Off 1BYTE: Defog 0x01-Low,0x02-Mid, 0x03-High,0x04-Off	RD/WR	02
0x09	0x000E	Gamma_En	1	Set/Get Gamma Mode Enable/Disable 1BYTE: 0x01-On, 0x02-Off	RD/WR	01

Table 9: Day Low Light Command Table

Day Low Light Lens Control						
CMD ID	**Address**	**Command**	**Byte Count**	**Description**	**Read/Write**	**Default**
0x09	0x0100	Zoom	3	Zoom command by Passing mode. 1BYTE: Mode (Continuous/Manual) 0x01-Continuous, 0x02-Manual. 1BYTE: (In/Out) 0x01-In, 0x02-Out. 1BYTE: Speed 1 to 7. Note: Presently we are supporting only Continuous Zoom	WR	-
0x09	0x0101	Focus	3	Focus command by Passing mode. 1BYTE: Mode (Continuous/Manual) 0x01-Continuous, 0x02-Manual. 1BYTE: (Far/Near) 0x01-Far, 0x02-Near. 1BYTE: Speed 1 to 7 Note: Presently we are supporting only Continuous Focus	WR	-
0x09	0x0102	Lens_Stop	1	Stop command for Lens control by Passing mode. 1BYTE: Mode (Zoom/Focus) 0x01-Zoom, 0x02-Focus	WR	-
0x09	0x0103	Focus_Type	1	Set Auto focus. 1BYTE: Type (Auto/Manual) 0x01-Auto,0x02-Manual	RD/WR	0x01
0x09	0x0104	FOV	1	Range 1 to 9	RD/WR	0x01
0x09	0x0106	Focus_Mode	1	Set Focus Mode, Valid only if Focus Type is set to Auto. 1BYTE: Mode (Normal/Interval/ZeroTrigger) 0x01-Normal,0x02-Interval,0x03-ZeroTrigger **Valid only if Focus_Type(0x0103) in Auto Mode**	RD/WR	0x01
0x09	0x0107	Focus_Senstivity	1	Set/Get Focus Sensitivity as Normal/Low 1Byte: Mode 0x01-Low,0x02-Normal **Valid only if Focus_Type(0x0103) in Auto Mode**	RD/WR	0x01
0x09	0x0108	DZoom_En	1	Set/Get Digital Zoom Enable/Disable 1Byte:0x01-Enable,0x02-Disable	RD/WR	0x02
0x09	0x010B	DZoom_Direct	1	Range 1 to12 **Valid only if DZoom_En(0x0108) is enabled and DZoom_Mode(0x010C) is configured as Separate**	RD/WR	0x01
0x09	0x010C	DZoom_Mode	1	Set/Get DZoomMode,1Byte:0x01: Combine,0x02-Separate **Valid only if DZoom_En(0x0108) is enabled**	RD/WR	0x02

Table 10: Day Low Light Lens Command Table

Day Normal Controls						
CMD ID	Address	Command	Byte Count	Description	Read/Write	Defaults
0x0F	0x0001	Auto_Exposure	1		RD/WR	
0x0F	0x0002	Integration_Time	2		RD/WR	
0x0F	0x0003	Integration Time Minimum	2		RD/WR	
0x0F	0x0004	Integration Time Maximum	2		RD/WR	
0x0F	0x0005	Orientation	1	0x00 : Normal 0x01 : Vertical Flip 0x02 : Horizontal Mirror	RD/WR	
0x0F	0x0006	AutoWhiteBal	1	0x00:Outdoor;0x01:Indoor	RD/WR	
0x0F	0x0007	TargetLuma	2	Set/Get Target Luma value,2Bytes-4000 to 8000	RD/WR	7000
0x0F	0x0008	AutoGain	1	Set/Get Auto Gain, 0x01-En,0x02-Dis	RD/WR	0x01
0x0F	0x0009	AnalogGain	1	Set/Get AnalogGains,1Byte:1x/2x/3x/4x	RD/WR	1x

Table 11 : Day Normal Command Table

Day Normal Lens Controls						
CMD ID	Address	Command	Byte Count	Description	Read/Write	Defaults
0x0F	0x0100	Zoom	3	Zoom command by Passing mode. 1BYTE: Mode (Continuous/Manual) 0x01-Continuous, 0x02-Manual. 1BYTE: (In/Out) 0x01-In, 0x02-Out. 1BYTE: Speed 1 to 7. Valid for Continuous Zoom, send 0 for manual zoom	WR	Null
0x0F	0x0101	Focus	3	Focus command by Passing mode. 1BYTE: Mode (Continuous/Manual) 0x01-Continuous, 0x02-Manual. 1BYTE: (Far/Near) 0x01-Far, 0x02-Near. 1BYTE: Speed 1 to 7. Valid for Continuous Focus, send 0 for manual Focus	WR	Null
0x0F	0x0102	Lens_Stop	1	Stop command for Lens control by Passing mode. 1BYTE: Mode (Zoom/Focus) 0x01-Zoom, 0x02-Focus	WR	Null
0x0F	0x0104	FOV	1	Set/Get FOV. Range 1 to 11	RD/WR	1
0x0F	0x0107	Abs_Focus	2	Set/Get lens focus value	RD/WR	1-2848
0x0F	0x0108	Abs_Zoom	2	Set/Get lens zoom value	RD/WR	1-1000
0x0F	0x0109	Zoom_Speed	1	Set/Get Zoom Speed. Range:1-5	RD/WR	
0x0F	0x010A	Focus_Speed	1	Set/Get Focus Speed. Range:1-5	RD/WR	

Table 12: Day Normal Lens Command Table

LRF Control						
CMD ID	**Address**	**Command**	**Byte Count**	**Description**	**Read/ Write**	**Default**
0x03	0x0001	Range_Measurement	1	Single Range Measurement. 1BYTE: Mode (SMM/CH1/CH2) 0x01-SMM, 0x02-CH1(Quick SMM1: Duration Max 0.35 secs), 0x03-CH2 (Quick SMM2: Duration Max 0.65 secs). SMM Mode will run in a loop and range get updated once in 5sec. Use Break_Cmd(0x0003) to stop SMM Mode CH1/CH2 are On demand	WR	0x01
0x03	0x0002	Continuous_Range_Measurement	1	Continuous Measurement. 1BYTE: Mode 0x01-1Hz 0x02-4Hz 0x03-10Hz 0x04-20Hz 0x-05-100Hz Use Break_Cmd(0x0003) to stop	WR	0x01
0x03	0x0003	Break_Cmd	1	Break command to stop the Continuous Measurement. Valid only if Continuous_Range_Measurement/SMM Mode is set 1BYTE: 0x01	WR	-
0x03	0x0007	Align_Pointer	1	Set Align_Pointer. 1BYTE: Mode (True/False) 0x01-True, 0x02-False	WR	0x02
0x03	0x0008	Target_Range	2	Get Target Range. Ex: If Data received is 0x03E8. Then Convert 0x03E8 to decimal which is 1000 i.e., Target is at 1000 meters	RD	0

Table 13: LRF Command Table

Tracker Controls						
CMD ID	**Address**	**Command**	**Byte Count**	**Description**	**Read/Write**	**Defaults**
0x07	0x0001	Tracker	6	Set/Get Tracker coordinates. 1BYTE: CamID (0x01-Thermal, 0x02-Day1,0x03 – Day2), 2BYTES: object X-position (Position should be with in Search_Area window) 2BYTES: object Y-position (Position should be with in Search_Area window) 1BYTE: Mode Start/Stop (0x01-Start, 0x02-Stop)	RD/WR	-
0x07	0x0002	Box_Size	3	Set/Get Tracker box size. Width and Height range 1 to 250 in steps of 1. 1BYTE: CamID (0x01-Thermal, 0x02-Day1,0x03 – Day2). 1Bytes: width. 1Bytes: height.	RD/WR	-
0x07	0x0003	Detection_Mode	2	Set/Get Detection mode. 1BYTE: CamID (0x01-Thermal 0x02-Day1 0x03- Day2), 1BYTE: Mode (0x03-Drone 0x04-Aircrafts 0x05-None 0x06-All 0x07-Bird 0x08-FighterJet)	RD/WR	0x05(Mode) Note: If auto detection enabled, send None(0x05) to disable auto tracking
0x07	0x0008	Auto_Tracking(Tracking Mode)	4	Set/Get Auto tracking Mode 1BYTE: CamID (0x01-Thermal 0x02-Day1 0x03-Day2), 1BYTE: Mode (0x01-None 0x05-Drone 0x06-Bird 0x07-FighterJet 0x08-All), 1BYTE: 0x01(Reserved)	RD/WR	0x01(Mode) Note: If auto tracking enabled, send None(0x01) to disable auto tracking

				1BYTE: 0x01(Reserved)		
0x07	0x000E	TrkCamSwitch	1	Set/Get Tracking Camera Switching 1BYTE: CamID (0x01-Thermal/0x02-Day1/0x03-Day2)	RD/WR	0x01
0x07	0x000F	Tracking_Type	2	Set/Get Tracking mode, Person/Vehicle/Drone. 1BYTE: CamID (0x01-Thermal/0x02-Day1/0x03-Day2), 1BYTE: Type (0x01-Correlation/0x02-Edge)	RD/WR	0x01(Type)
0x07	0x0010	Search_Area	2	Set/Get Max Track Fail Count. 1BYTE: CamID (0x01-Thermal, 0x02-Day1/0x03-Day2), 1BYTE: Search Area in Percentage from center. Range 0-100	RD/WR	0x3C (Search Area)
0x07	0x0011	Track_ConfidenceValue	2	Set/Get TrackConfidenceValue 1BYTE: CamID (0x01-Thermal, 0x02-Day,0x03-Day2), 1BYTE: Threshold. Range 0-1 in steps of 0.1. Multiply value with 10 and pass as input (i.e., to set 1 send 0A)	RD/WR	0x02(Threshold)

Table 14: Tracker Commands Table

APPENDIX – I

Command examples for different functionalities.

1. Telemetry Data

If user wants to enable telemetry data, User has to send the below command.

Telemetry Write Command

Command to Camera → CC 57 00 0004 0001 01 00D4

Response from Camera → CC 00 00 0004 0000 F8BE

A 175-byte UDP packet consisting of a 5-byte header, 2-byte data byte count and 168 bytes of telemetry data will be streamed over UDP port 8005.

Device	NumBytes	Data	Remarks
Telemetry Version	1	1 Byte for version Id of telemetry protocol	
PT	10	Factory Reserved	
LRF	5	2 Bytes LRF Range; 3 Bytes Reserved	
Thermal	20	4 Bytes Reticle Coordinates (2 Bytes X Coordinates, 2 Bytes Y Coordinates); 1 Byte FOV; 4 Bytes FOV in Degrees; 11 Bytes Reserved	4 Bytes FOV in Degrees – Floating point representation
Day1	20	4 Bytes Reticle Coordinates (2 Bytes X Coordinates, 2 Bytes Y Coordinates);1 Byte FOV; 4 Bytes FOV in Degrees;11 Bytes Reserved	4 Bytes FOV in Degrees - Floating point representation
Day2	20	4 Bytes Reticle Coordinates (2 Bytes X Coordinates, 2 Bytes Y Coordinates);1 Byte FOV; 4 Bytes FOV in Degrees;11 Bytes Reserved	
Tracker	20	1 Byte Tracker Mode(0x01-Enable,0x02-Disable); 2 Bytes X_Postion; 2 Bytes Y_Position; 2 Bytes Tracker Width;2 Bytes Tracker Height; 2 Bytes Pan error; 2 Bytes Tilt error;1 Byte TrackCamId;1Byte TrackMode;1Byte TrackType;1Byte DetectionMode; 3 Bytes Reserved	4 Bytes Pan Speed and 4 Bytes Tilt Speed in Floating point representation
Factory Reserved	20	20 Bytes Reserved	

Temperature	2	2 Bytes for System;	Value Should be divided by 100
GPS	45	45 Bytes Reserved	
Power_Controls	5	1Byte Day Cam ON/OFF(0x01-ON,0x02-OFF); 1Byte Thermal Cam ON/OFF(0x01-ON,0x02-OFF); 1Byte PLCB ON/OFF(0x01-ON,0x02-OFF); 1Byte LRF ON/OFF(0x01-ON,0x02-OFF); 1Byte- Total System Power (in watts);	

Table 15: Telemetry Data

Note: If Telemetry Data is on, then 177 Bytes continuous data will be streamed out over UDP port 8005

Example: Telemetry Data received from UDP port

cc0000000400a8070000000000000000000000007d00000000280016801f7e2b141000000000000000000000000
003c0021c019a9975420000000000000000000000003c0021d01987ee541000000000000000000000000000
000000000000000000000001050101000000000000000000000000000000000000000000000000000151100000
000000000000000000000000000000000000000000000000000000000000000000000000000000000000000000
0101010120647c

Header (5 Bytes):
CC00000004

Byte Count (2 Bytes):
00a8
- 0x00a8 → 168 Bytes

Telemetry Version (1 Byte):
07
- 0x07 → 7

PT (10 Bytes):
- 00000000000000000000 -> Reserved

LRF (5 Bytes):
07d0000000
- 0x07d0 → 2000 meters
- 0x000000 - Reserved

Thermal (20 Bytes):
0280016801f7e2b14100000000000000
- 0x0280 → 640 X Coordinate
- 0x0168 → 360 Y Coordinate
- 0x01 → FOV1
- 0x f7e2b141 → 22.236 FOV in Degrees (floating point precision)
- 0x00000000000000000000 – Reserved

Day1 (20 Bytes):
03c0021c019a9975420000000000000000000000
- 0x03c0 → 960 X Coordinate,
- 0x021c → 540 Y Coordinate
- 0x01 → FOV1
- 0x9a997542 → 61.4 FOV in Degrees (floating point precision)
- 0x00000000000000000000 – Reserved

Day2 (20 Bytes):

03c0021d01987ee5410000000000000000000000

- 0x03c0 → 960 X Coordinate,
- 0x021D → 541 Y Coordinate
- 0x01 → FOV1
- 0x987ee541 → 28.687 FOV in Degrees (floating point precision)
- 0x00000000000000000000 – Reserved

Tracker (20 Bytes):

00000000000000000000000000001050101000000

- 0x00 →Tracker Enable (0x01-Enable,0x02-Disable);
- 0x0000 → 0 2 Bytes X_Postion;
- 0x0000 → 0 2 Bytes Y_Position;
- 0x0000 → 0 2 Byte Tracker Width;
- 0x0000 → 0 2 Byte Traker Height;
- 4 Bytes → 0 Reserved;
- 1 Byte → 0x01 TrackCamId
- 1 Byte → 0x05 TrackMode
- 1 Byte → 0x1 TrackType
- 1 Byte → 0x01 Detection Mode

Factory Reserved:

- **20 Bytes Reserved**

Temperature:

- 0x1511 → 53.93°C System Temperature

GPS (45 Bytes):

- 45 Bytes Reserved

Power Controls:

0101010120

- 0x 01 - Day Camera ON
- 0x 01 - Thermal Camera ON
- 0x01 - PLCB ON
- 0x01 - LRF ON
- 0x20 – 32W (Total System Power)

CRC:

647c

Note: If LRF Range received 0x00FF, then Convert 0x00FF to decimal which is 255 i.e., LRF range is at 255 meters.
Hexadecimal to decimal conversion is applicable to Thermal Reticle Coordinates, Day Reticle Coordinates, Thermal FOV and Day FOV and Temperature values also.

2. THERMAL CONTROLS

1-NUC

If user wants to do 1 – NUC, User has to send the below command.

1-NUC Write Command

Command to Camera → CC 57 01 0008 0001 01 0A46

Response from Camera → CC 00 01 0008 0000 278E

Continuous Zoom Out

If user wants to do Continuous Zoom Out with speed 1, User has to send the below command.

Continuous Zoom Out Write Command

Command to Camera → CC 57 01 0100 0003 010201 E9C1

Response from Camera → CC 00 01 0100 0000 F89B

Continuous Zoom In

If user wants to do Continuous Zoom In with speed 1, User has to send the below command.

Command to Camera → CC 57 01 0100 0003 010101 BC92

Response from Camera → CC 00 01 0100 0000 F89B

Zoom Lens Stop

If user wants to do Zoom Out Lens Stop, User has to send the below command.

Command to Camera → CC 57 01 0102 0001 01 C8BC

Response from Camera → CC 00 01 0102 0000 96FB

Manual Zoom Out

If user wants to do Manual Zoom Out, User has to send the below command.

Command to Camera → CC 57 01 0100 0003 020200 A0B0

Response from Camera → CC 00 01 0100 0000 F89B

Manual Zoom In

If user wants to do Manual Zoom Out, User has to send the below command.

Command to Camera → CC 57 01 0100 0003 020100 F5E3

Response from Camera → CC 00 01 0100 0000 F89B

3. LRF CONTROLS

Pointer Enable/Disable

If user wants to do pointer enable/disable, User has to send the below command

Pointer Enable Write Command

Command to Camera → CC 57 03 0007 0001 01 A722

Response from Camera → CC 00 03 0007 0000 4F3C

Pointer Disable Write Command

Command to Camera → CC 57 03 0007 0001 02 658B

Response from Camera → CC 00 03 0007 0000 4F3C