Development of a Cyber-Physical Model and Emulation of an Oil and Gas Compressor Station for Cybersecurity Research and Development

Adam J. Beauchaine
Sandia National Laboratories
Albuquerque, NM
ajbeauc@sandia.gov

Titus A. Gray
Sandia National Laboratories
Albuquerque, NM
tagray@sandia.gov

Andrew S. Hahn
Sandia National Laboratories
Albuquerque, NM
ashahn@sandia.gov

Lee T. Maccarone
Sandia National Laboratories
Albuquerque, NM
lmaccar@sandia.gov

Scott T. Bowman
Idaho National Laboratory
Idaho Falls, ID
Scott.Bowman@inl.gov

***Abstract*—Significant research and development efforts are underway to ensure the cybersecurity of critical infrastructure and other operational technology (OT) systems. Given the high demand for safety and availability of OT systems, novel OT tools and systems must be designed and tested in a consequence-aware environment. This requires the seamless integration of high-fidelity physics simulations with emulations of OT devices and networks. This paper introduces a modular simulation environment for an oil and gas compressor station and its local networks. This environment will be used to support the development of novel tools to predict, detect, and mitigate cyber threats on critical infrastructure. This paper also describes future plans to expand the scale of the environment and its use cases.**

***Index Terms*—Cybersecurity, industrial control systems, operational technology, data analytics, modeling, simulation**

I. Introduction

Development of novel operational technology (OT) such as field devices and controllers has regularly outpaced the development of OT cybersecurity technology. Developing tools and techniques to detect, delay, and respond to novel threats is challenging without a holistic, consequence aware, research and development (R&D) environment. Historical OT cyber-attack evidence is static and relies on future novel attacks against critical infrastructure to expand the datasets. While historical data should be leveraged to hone cyber threat detection and mitigation systems, dependence on this data source results in reactive cybersecurity R&D. A platform for modeling OT systems that provides unparalleled transparency and physics-validated consequence modeling is imperative for proactive cybersecurity R&D.

The modeling and simulation environment developed in this work aims to address these current R&D challenges. This environment offers a high fidelity, modular, physics informed simulation testbed in which OT devices and network components are emulated and interfaced with a dynamic physics simulation. Unlike alternative simulation/emulation platforms, the developed platform enables high-fidelity control system, physics, and network coupled dynamics which captures low level indicators of compromise (IOCs) and is scalable to measure national infrastructure level phenomena. The environment additionally features data collection features, and analytical model support for anomaly detection and classification. This paper details the application of cyber and physical modeling and simulation tools for a natural gas compressor station.

II. Physics Simulation Engine

A physics model is essential for comprehensive system-specific OT cybersecurity R&D. The physics simulation is one piece of a system-of-systems model that can determine the systemic consequences, produce compromise signatures, and inform mitigation strategies for any given component vulnerability. In this section, the currently leveraged physics simulation modeling is detailed, including the modular and customizable aspects of Simulink integration.

The programmatic focus for these efforts is oil and gas infrastructure, and a natural gas compressor station was selected to be modeled. The physics model of the gas compressor station with its distributed control system is depicted in Figure 1. The Simulink Simscape package was selected to model the compressor station physics in a modular and flexible fashion. Scalability and modularity are key criterion in the design of the physics model. Each sub-system within the model is expected to become part of a library of critical infrastructure systems that can be used to provide rapid modeling of facilities. Previously modeled components can be reused or easily revised as the modeling and simulation development expands to encompass larger oil and gas pipeline infrastructure.

Figure 2 details the Brayton cycle gas turbine which was modified to become a methane-fueled turbine-driven gas compressor [1]. This turbine design is employed in the current

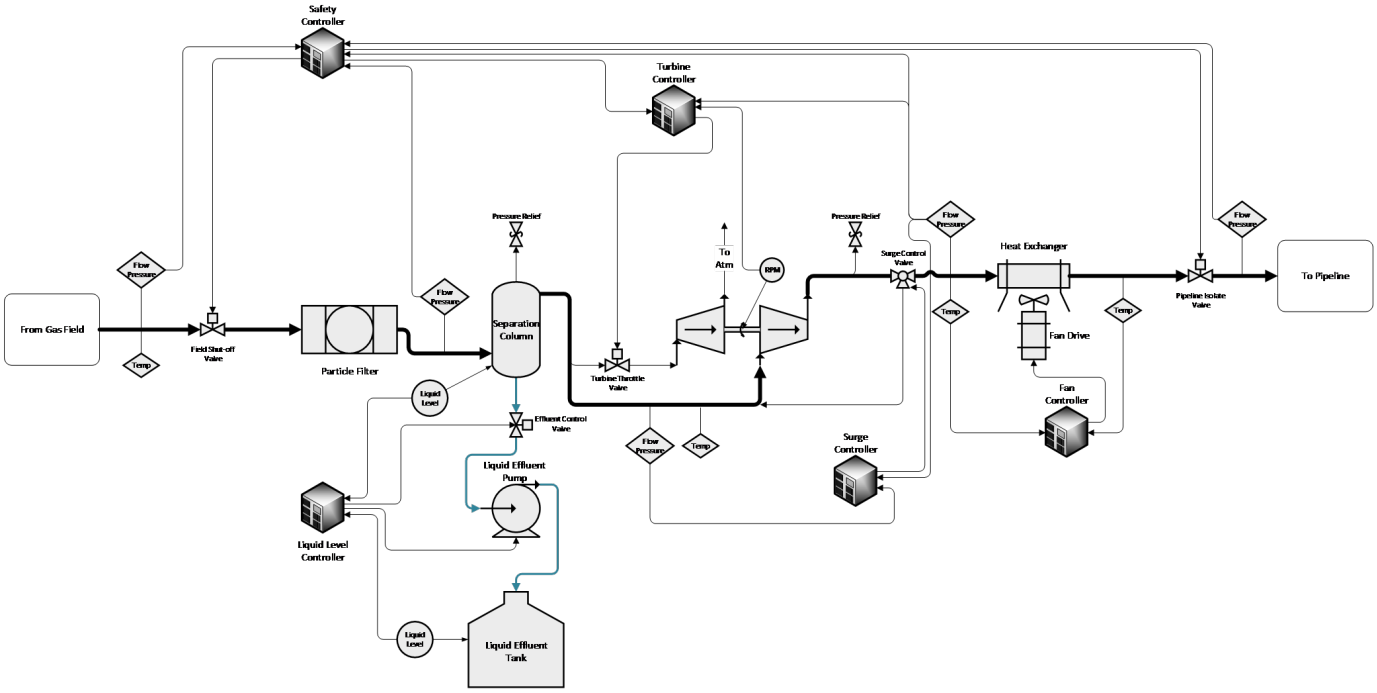

Fig. 1: Diagram of the Compressor Station Physics Model

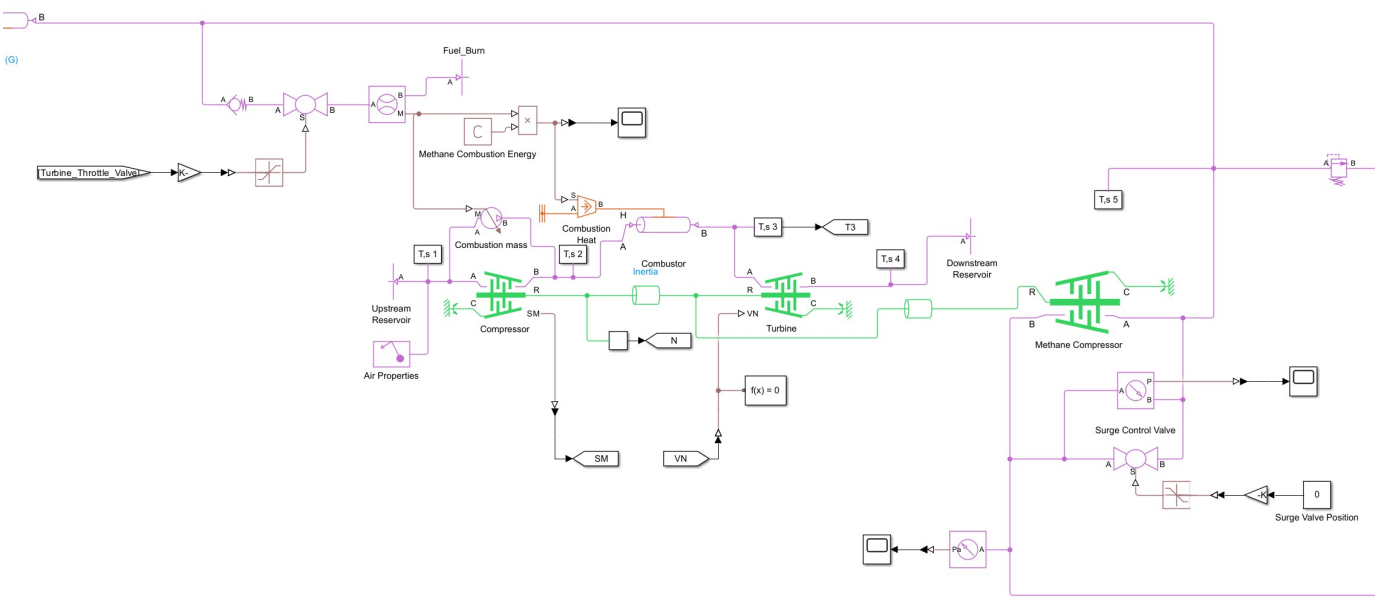

Fig. 2: Turbine Simscape Architecture

compressor station model. Using the Simulink Simscape package allows for expedient development of simulation system components, allowing systems to be easily visualized and designed with a greater degree of modularity between system components. The solution parameters of each component (e.g., pipe diameter, tank size) are defined by external configuration files, allowing rapid customization and tuning. The process of simulation configuration is further orchestrated through scripted input preparation across a wide range of components.

Large scale initialization of model parameters is a common goal in emulation environments. Simulink model callbacks allow for Matlab script execution at predetermined points in simulation runtime. Scripts may be used to initialize and append values to component objects before each run begins. Even in instances of static parameter variables, the usage of these scripts allows for the centralization and readability of

simulation properties. The current compressor turbine model script allows for rapid customization of control surfaces, turbine parameters, and gas model properties. The usage of these scripts may additionally be extended across novel environments derived from current simulation modeling.

Physics simulation data is provided from a Simulink instance and distributed to the rest of the emulated network environment via the DataBroker [2]. The DataBroker leverages a shared memory instance for real-time exchange of control system response data into the physics model and physics sensor data out to the distributed control system. It establishes a high speed physics data network which leverages distributed computing techniques to ensure extremely low latency. Distributed nodes in the system, known as "Endpoints", allow highly customizable communication methods to interface with the majority of OT devices and emulations.

The DataBroker's shared memory structure allows for an environment in which downstream systems are agnostic to the source of live physics data. Physical data values are converted into generic C data types by the DataBroker before being passed to downstream systems. While Simulink has been leveraged for the reasons detailed in this section, future implementations are not bound to Simulink as a physics simulation platform. For example, the DataBroker system has also been used to interface with Flownex as an alternative physics emulation platform [3], [4]. This connection of the physics model to a broader emulation system additionally allows for expansive customization of control system and network conditions.

III. Network Simulation Engine

The network emulation is central to the holistic representation of cyber-risk in the OT system. With emulated programmable logic controllers (PLCs), human-machine interfaces (HMIs), and hardware-in-the-loop (HIL) capabilities, the breadth of available testing and analysis increases greatly. Figure 3 shows a network diagram of an example compressor station, detailing the PLCs, HMIs, and historians that would be found in a compressor station.

While there are multiple software options with PLC simulation capabilities, there are very few software options with PLC emulation capabilities. PLC simulations run the PLC software in an environment that is not congruent with firmware of the real PLC and are often used for development and education applications. Simulations allow for testing the PLC logic, but lack fidelity in replicating the PLC's full software stack and consequently limit the scope of cybersecurity R&D using the simulated device. In contrast, an emulation runs the PLC software as if it were running in the real hardware with the real firmware. An emulation is almost never a perfect copy of the real system, but it allows for much higher-fidelity and greater depth of cyber analysis than a simulation.

Two PLC emulation options were considered: Siemens S7-PLCSIM Advanced and Rockwell Automation's Studio 5000 Logix Emulate. When evaluating these two options, it was discovered that the Siemens S7-PLCSIM Advanced software does not allow for many of the security features of the PLCs to be implemented [5]. The Rockwell Automation Studio 5000 Logix Emulate tool does not allow for external communication from within the simulated environment [6]. Siemens S7-PLCSIM Advanced was selected as the emulation platform for initial experimentation because of its external communication capabilities. These challenges indicate that greater support from vendors is needed to improve the scope of future PLC emulations.

The network emulation system in which the OT devices, such as the PLCs, will be virtualized and interconnected must be capable of: instantiating large numbers of virtual machines (VMs), managing the network emulations interconnecting these VMs, and capturing real time network data. Minimega, a tool developed by Sandia National Laboratories, is well suited to meet these needs. Minimega was developed for the purpose of launching and managing VMs in an emulated network topology [7]. Minimega allows for rapid, repeatable, and automated deployment of large scale network topologies. This high scalability is a key feature leveraged to enable rapid expansion of the emulated network based on experimental need. Minimega may additionally scale to simulate multiple independent topologies allowing for multiple concurrent simulations, provided computational resources exist to do so. Sandia-developed tools such as Miniweb and Phenix allow for graphical, user-friendly resource management of complex networks with large numbers of nodes [7], [8].

One example study that demonstrated Minimega's scalability used Minimega to simulate a global internet-like network connecting multiple autonomous systems [9]. Networked devices in this scenario leveraged standard TCP/IP protocol stacks in the same manner as a real Internet service provider network. The authors further indicate that Minimega may scale to tens of thousands of devices assuming hardware requirements are met.

One of Minimega's most important features for this work is system transparency. Minimega allows for all network traffic to be monitored and captured through network taps and integrated network capture tools. This feature is essential for evaluating the effects of a cyber attack against a network. One core Minimega tool that assists with network traffic generation is Protonuke [10]. Protonuke is a lightweight IP network traffic generator that can be used to inject both normal and anomalous network traffic to the modeling and simulation environment. Protonuke can be configured to trigger a Denial-of-Service (DoS) attack, SQL injections, or other adversarial actions that might occur on an IP network. This allows for comprehensive analysis of the effects that a cyber attack may have in OT environments, including simulated attacks against the controllers, HMIs and other network components.

One example study of a complex network engineering testbed leveraged network traffic generation coupled with Minimega's capacity for supporting high fidelity network simulations [11]. Their system included several topological schemes, implementation of Quality of Service (QoS) features, and a custom layer 2 traffic forwarding engine within a virtualized

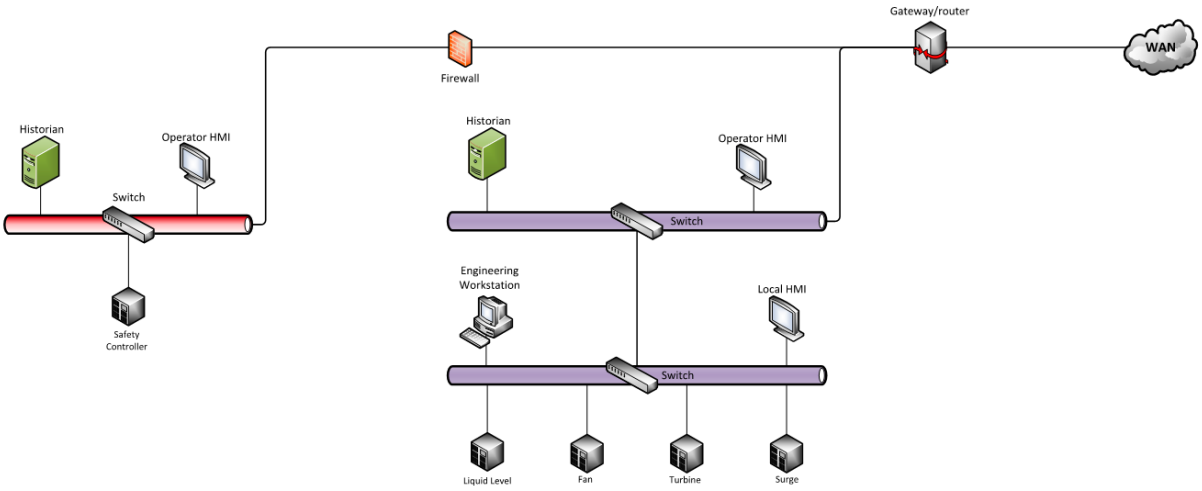

Fig. 3: Example Network Architecture of ONG Compressor Station

switching device. The researchers noted Minimega's capacity for nuanced link emulation in endpoint devices, suite of traffic generation tools, and simplified, configuration file based orchestration. These evaluative efforts provide confidence in Minimega's capacity to simulate large, complex OT networks as those needed for the experimentation detailed in this work.

Minimega has been used for cyber analysis of other energy systems including nuclear power. Cyber analysis has been performed for both reactor designs belonging to the existing fleet [12], [13], and advanced reactors in the early stages of design [14]–[16]. These analyses also demonstrated the ability for HIL integration with Minimega, thereby enabling testing of physical components with the high-fidelity emulated controllers in a virtual environment. Figure 4 shows a network map of a Minimega environment for a nuclear power plant's control system and the experiment management network, with multiple VLANs logically separating the network. This network map demonstrates how Minimega allows for VLANs within a network and has the ability to configure separate networks simultaneously to emulate different security zones.

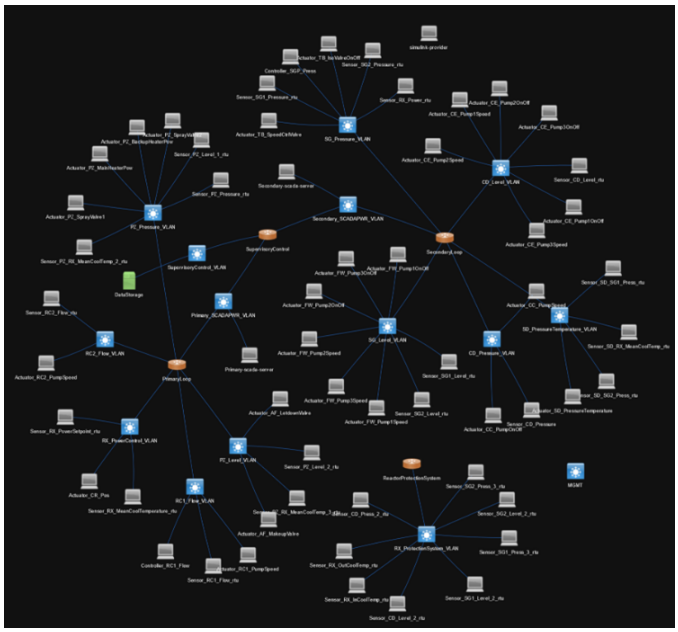

Fig. 4: Minimega Emulated Network Map

IV. Data Analysis

The cyber-physical modeling and simulation platform allows for the extraction and formalization of a wide range of internal simulation observables, both within the physics engine and virtualized Minimega network. This data includes both network and system events, physical simulation alerts, and high level user observable events. The data collection capabilities of the modeling and simulation platform are well suited to interface with analytical cybersecurity tools and artificial intelligence (AI) and machine learning (ML) approaches to data analysis. All systems described in this section may leverage unique input parameters, but such inputs may be rapidly and programmatically generated through the data gathering capabilities of Minimega. MiniCCC allows for rapid data gathering from simulated Minimega systems [17]. While such data may require additional formatting for model compatibility, MiniCCC allows for automation of the most challenging parts of these workflows. The remainder of this section will discuss applications of the modeling and simulation environment for cybersecurity tools developed by the Cybersecurity for the Operational Technology Environment (CyOTE) program [18].

A. Bayesian Attack Model (BAM)

The Bayesian Attack Model (BAM) is a CyOTE tool developed to enhance the comprehension of cyber attack observables across the experiences of different OT roles and responsibilities, and to provide actionable decision intelligence to respond to cyber attacks [19], [20]. Bayesian networks are frequently leveraged for observable event analysis and are a

convenient method to graphically represent a joint probability distribution over a large number of states. Cyber observables are provided as input to the network, and evidence flows throughout the network to enable inferences to be made about the state of the cyber attack. For ease of interpretation, BAM leverages the MITRE ATT&CK® for ICS taxonomy of techniques and tactics [21], and broad phases of cyber attack progressions to characterize the state of the attack.

Additional data from a modeling and simulation environment would be valuable for refining and testing BAM. Most conditional probability tables (CPTs) were defined using a combination of OT security expert elicitations and historical data. Additional cyber attack data would provide further information for updating the values of CPTs as needed. Modeling and simulation could also be used to assist in the interpretation of BAM's output. Factors such as the cyber attack type, asset complexity, and organizational cybersecurity capabilities and maturity are likely to affect BAM's output. Exposure to a diverse set of simulated cyber attacks and OT systems is necessary to advance BAM's technology readiness level.

B. Collection and Analysis of Telemetry for CyOTE Heuristics (CATCH)

Collection and Analysis of Telemetry for CyOTE Heuristics (CATCH) is a tool designed to interface with OT systems to provide a structured method for collection and analysis of OT system data [22]. First, collection engines gather pertinent telemetry data. Numerous analysis modules then analyze the data to identify anomalous activity and characterize likely adversarial techniques.

CATCH's architecture enables it to be integrated with the virtualized simulation structure of the environment. Implementation has not yet been performed, but data collection modules may be implemented seamlessly throughout a Minimega simulation environment, and data retrieval is already a core component of the simulation workflow. CATCH is likely to be an implementation target for near future development work.

C. Operational Process for Trigger Identification and Comprehension (OPTIC)

The Operational Process for Trigger Identification and Comprehension (OPTIC) is a tool that enables human observers of anomalous OT events to gather evidence of potential cyber attacks [23]. Observables recorded by an OPTIC user could range from host-based observables such as unexpected cursor movement on an HMI to environment-based observables such as anomalous behavior of the controlled process. In the current modeling and simulation environment, OPTIC users could learn to identify cyber attack observables through simulated training scenarios custom to their OT systems.

D. Artificial Intelligence

The development of AI-enabled systems has long been prevalent within the domain of information security, however, current approaches may not sufficiently address OT network needs. This is due in part to the high data demands of AI techniques to achieve effective results. The architecture of this modeling and simulation system allows for the generation of such large-scale OT data sets. This data is amenable to a wide range of AI techniques within the multiple domains. The simulation system is also expected enable key validation pathways for AI/ML and advanced cybersecurity tools (Figure 5).

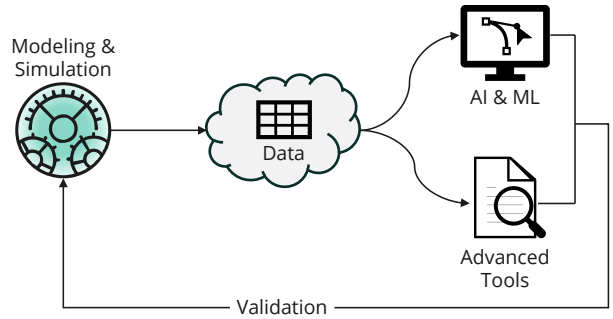

Fig. 5: Example AI Verification Workflow

Validation and verification (V&V) will be an essential but difficult process for novel tools which expect to be used in high consequence domains such as critical infrastructure. AI/ML provide an even greater challenge in these domains, as the V&V techniques for AI/ML in safety critical systems are still an emerging field [24]. It is clear, however, that these novel tools will need at a minimum, vast amounts of data, a consequence aware testbed, and an environment for integration testing. The developed simulation environment is expected to meet all these key needs while providing a flexible digital twin which can be leveraged for a variety of critical infrastructure cybersecurity R&D activities. Several of these potential AI V&V methods are detailed in this section.

Unsupervised learning techniques are natural candidates for implementation, given the unstructured nature of system data generation. For example, Aussel et al. present an optimized model of log anomaly detection leveraging semantic vectorization techniques of natural language log files [25]. In this model, log files are tokenized and leveraged in topic assigned flags that can be used to create a labeled dataset. Such a dataset may be used in supervised learning algorithms to predict system failure based on novel messages. Given the nature of system output data, such unsupervised modeling approaches will need to be leveraged in AI V&V services.

Smaller sets of labeled data may be generated naturally from system outputs. One simple example is network traffic captured during a DoS attack on a network router. Such data may be temporally labeled with respect to whether or not an attack occurred at that time, or through human labels applied after experimentation. This data may be directly leveraged in the training of supervised learning models for system state analysis. The resulting output data may be verified against classical approaches, including statistical analysis tools such as Dakota [26], or labels gained by expert opinion on system state. Such comparisons will be crucial in verifying AI approach accuracy and capacity for generalization in the future.

V. Future Work

Near-term goals for enhancing the oil and gas modeling and simulation environment include more complex modeling of real-world physics systems, and further verification of simulation fidelity in comparison to physical testbeds. After completion of initial development work, the physics model and OT emulation will be expanded to a pipeline infrastructure of seven compressor stations and pipeline control centers. This integration will serve to demonstrate the scalability of the modeling and simulation environment and the capacity for rapid development using modular component structure. The expanded model and simulation outputs will be compared against existing physical systems and testbeds for verification and validation. Further integration with analytical models and tools as described in Section IV will occur after expanded modeling and simulation is complete.

Acknowledgments

This research was funded by the U.S. Department of Energy's Office of Cybersecurity, Energy Security, and Emergency Response (DOE CESER).

This article has been authored by an employee of National Technology & Engineering Solutions of Sandia, LLC under Contract No. DE-NA0003525 with the U.S. Department of Energy (DOE). The employee owns all right, title and interest in and to the article and is solely responsible for its contents. The United States Government retains and the publisher, by accepting the article for publication, acknowledges that the United States Government retains a non-exclusive, paid-up, irrevocable, world-wide license to publish or reproduce the published form of this article or allow others to do so, for United States Government purposes. The DOE will provide public access to these results of federally sponsored research in accordance with the DOE Public Access Plan https://www.energy.gov/downloads/doe-public-access-plan.

This document was prepared by Idaho National Laboratory (INL) under an agreement with and funded by the U.S. Department of Energy. INL is a U.S. Department of Energy National Laboratory operated by Battelle Energy Alliance, LLC.

References

[1] MathWorks, "Brayton Cycle (Gas Turbine) with Custom Components - MATLAB & Simulink," 2023. [Online]. Available: https://www.mathworks.com/help/simscape/ug/brayton-cycle-gas-turbine-with-custom-components.html

[2] A. S. Hahn and R. E. Fasano, "OT Emulation Data Broker," Sandia National Laboratories, Albuquerque, NM, Tech. Rep., 2021.

[3] Aug 2022. [Online]. Available: https://flownex.com/

[4] A. S. Hahn, A. J. Beauchaine, and T. A. Gray, "Cyber Security Consequence Prioritized Design Via Simulation," in *INMM Annual Conference*, Portland, OR, 2024, pp. 1–13.

[5] Siemens, "SIMATIC S7-1500 S7-PLCSIM Advanced Function Manual," Siemens, Tech. Rep., 2022. [Online]. Available: https://cache.industry.siemens.com/dl/files/153/109739153/att_895955/v1/s7-plcsim_advanced_function_manual_en-US_en-US.pdf

[6] Rockwell Automation, "Studio 5000 Logix Emulate Getting Results Guide," Rockwell Automation, Tech. Rep., 2022. [Online]. Available: https://literature.rockwellautomation.com/idc/groups/literature/documents/gr/lgem5k-gr016_-en-p.pdf

[7] J. Crussell, J. Erickson, D. Fritz, and J. Floren, "minimega v. 3.0, version 00," 12 2015. [Online]. Available: https://www.osti.gov//servlets/purl/1312788

[8] A. Dnkcom, "Phenix documention." [Online]. Available: https://phenix.sceptre.dev/latest/

[9] V. Urias, B. Van Leeuwen, W. Stout, and B. Wright, "Emulytics at sandia national laboratories," *MODSIM World*, vol. 2015, 2015.

[10] Sandia National Laboratories, "Protonuke - Simple Traffic Generation," 2024, accessed: 2024-08-15. [Online]. Available: https://www.sandia.gov/minimega/protonuke-simple-traffic-generation/

[11] B. Kocoloski, A. Hussain, M. Troglia, C. Ardi, S. Cheng, D. DeAngelis, C. Symonds, M. Collins, R. Goodfellow, and S. Schwab, "Case studies in experiment design on a minimega based network emulation testbed," in *Proceedings of the 14th Cyber Security Experimentation and Test Workshop*, ser. CSET '21. New York, NY, USA: Association for Computing Machinery, 2021, p. 83–90. [Online]. Available: https://doi.org/10.1145/3474718.3474730

[12] A. S. Hahn, M. Higgins, D. R. Sandoval, R. E. Fasano, and C. C. Lamb, "Automated Cyber Security Testing Platform for Industrial Control Systems," in *2021 ANS NPIC & HMIT*, Virtual Online Meeting, 2021, pp. 915–924.

[13] M. T. Rowland, L. T. Maccarone, and A. J. Clark, "Using the Information Harm Triangle to Identify Risk-Informed Cybersecurity Strateges for Instrumentation and Control Systems," *Nuclear Technology*, vol. 209, pp. 471–487, 2023.

[14] L. T. Maccarone, A. S. Hahn, and M. T. Rowland, "System-Level Design Analysis for Advanced Reactor Cyebrsecurity," Sandia National Laboratories, Albuquerque, NM, Tech. Rep. SAND2023-11782, 2023.

[15] A. S. Hahn, L. T. Maccarone, and M. T. Rowland, "Simulation Based Analytical Approaches to Cyber Risk Mitigation in Advanced Nuclear Reactors," in *2024 ANS Annual Conference*, Las Vegas, NV, 2024, pp. 308–311.

[16] A. S. Hahn, M. Higgins, L. T. Maccarone, M. T. Rowland, and R. Valme, "Lessons Learned from Advanced Reactor Cyber Analysis and Development Environment (ARCADE)," in *2023 ANS NPIC & HMIT*, Knoxville, TN, 2023, pp. 1232–1240.

[17] [Online]. Available: https://www.sandia.gov/minimega/module-28-miniccc-and-the-cc-api/

[18] U.S. Department of Energy, "Cybersecurity for the Operational Technology Environment (CyOTE) Methodology," accessed: 2024-08-15. [Online]. Available: https://www.energy.gov/sites/default/files/2023-03/CyOTE-Methodology-Overview.pdf

[19] L. T. Maccarone, D. M. Buede, S. T. Bowman, C. D. Burdick, M. C. Bracken, J. M. Jones, and G. A. Weaver, "Development of a Bayesian Network to Model Malicious Cyber-Activity in Operational Technology Environments," in *Proceedings of the Sixteenth UAI Bayesian Modeling Applications Workshop*, Eindhoven, Netherlands, 2022, pp. 1–4.

[20] U.S. Department of Energy, "Bayesian Attack Model (BAM)," accessed: 2024-08-15. [Online]. Available: https://cyote.inl.gov/cyote/bam

[21] The MITRE Corporation, "ICS Matrix," https://attack.mitre.org/matrices/ics/, 2024, accessed: 2024-08-15.

[22] U.S. Department of Energy, "Collection and Analysis of Telemetry for CyOTE Heuristics (CATCH)," accessed: 2024-08-15. [Online]. Available: https://cyote.inl.gov/cyote/catch

[23] ——, "CyOTE Operational Process for Trigger Identification and Comprehension (OPTIC)," accessed: 2024-08-15. [Online]. Available: https://cyote.inl.gov/cyote/optic

[24] J. Zhang and J. Li, "Testing and verification of neural-network-based safety-critical control software: A systematic literature review," *Information and Software Technology*, vol. 123, p. 106296, 2020. [Online]. Available: https://www.sciencedirect.com/science/article/pii/S0950584920300471

[25] N. Aussel, Y. Petetin, and S. Chabridon, "Improving Performances of Log Mining for Anomaly Prediction Through NLP-Based Log Parsing," in *2018 IEEE 26th International Symposium on Modeling, Analysis, and Simulation of Computer and Telecommunication Systems (MASCOTS)*, Milwaukee, WI, 2018, pp. 237–243.

[26] B. Adams et al., "Dakota, A Multilevel Parallel Object-Oriented Framework for Design Optimization, Parameter Estimation, Uncertainty Quantification, and Sensitivity Analysis: Version 6.15 User's Manual," Sandia National Laboratories, Albuquerque, NM, Tech. Rep. SAND2020-12495, 2020.