AI Assisted Portable ECG for Fast and Patient Specific Diagnosis

Md. Hafizul Islam Chowdhuryy, Dept. of EEE, Chittagong University, Chittagong, Bangladesh reyad010@gmail.com

Maliha Sultana, Dept. of EEE, Chittagong University, Chittagong, Bangladesh malihasultana1616@gmail.com

Rajib Ghosh MBBS, FCPS (medicine), MCPS (medicine), MD (cardiology), Consultant of Medicine, Sadar Hospital, Bandarban, Bangladesh rajib119@gmail.com

Jamal Uddin Ahamed PhD, Associate Professor, Dept. of EEE, Chittagong University, Chittagong, Bangladesh ahamed.jamal@cu.ac.bd

MAI Mahmood PhD*, Associate Professor, Dept. of EEE, Chittagong University, Chittagong, Bangladesh arif.im@cu.ac.bd

***Abstract*—Human errors, unavailability of patient history, lack of demographic data, lack of expert supervisors for time sensitive diagnosis etc. often lead to fatal errors in Cardiovascular Disease diagnostics (CVD). In our current work, we incorporated machine learning through deep convolutional neural network and wireless bio-sensing to make an ultraportable ECG (Electro Cardiogram) module that will help reduce these errors. We've verified our system and algorithm using MIT-BIH and PTB database of 40 patients with an accuracy of 84%. As we trained our system with more patients, our accuracy improved from 58% for 10 patients to 84% for 80 patients. The preliminary system showed 92.3% accuracy with 7.69% false positives. Our wireless sensor nodes utilized low power/ low bandwidth MQTT protocol to mimic a very low latency wired equivalent real-time system with ultra-portability.**

Keywords— STEMI detection, AI assisted ECG, MQTT, IoT

I. Introduction

Nearly one-third (31%) of deaths worldwide is caused by heart diseases and the situation is projected to get worse until at least 2030 [1]. 42.5% of such deaths are due to Ischemic Heart Disease (IHD) which is caused when arteries supplying blood to the heart gets clogged. ST Elevation Myocardial Infarction (STEMI) is the most common occurrence of IHD. In STEMI, quick, pre-hospital interpretation of ECG is crucial to prevent any tissue damage and thus to ensure optimal treatment. Although, most ECG machines are equipped with ECG interpretation algorithms, there are listed cases that are often misinterpreted by the machines and even medical staffs [2]. The technology also falls short to adopt the modern tools/algorithms that can incorporate knowledge of risk factors like age, sex, genetic susceptibility, hypertension, smoking and family history of premature CVDs etc. As a result, the diagnosis without an experienced cardiac expert looking over can be seriously flawed. In our current project we've attempted to address these issues using tools like AI and IoT.

Machine learning processes along with increased computational capability have enabled us to solve complex problems. Several recent studies like Wavelet-based signal analysis [3], Support Vector Machine (SVM) based approach [4] have implemented some form of machine learning algorithm to classify ECG signals in order to detect abnormalities. A more recent study was able to utilize the deep convolutional neural network to detect Myocardial Infraction at an accuracy of over 90% [5]. We used this principle to facilitate ECG diagnostic.

A wireless sensor node system was developed to collect ECG signals. This poses few challenges and benefits. Wireless systems are inherently vulnerable to noise and signal drops. To create a plug-n-play experience, some extra background work is necessary. Also providing power to a wireless node requires extra effort. However such system has the benefit of enabling tests like Exercise Tolerance Test (ETT) without being confined in a room. Also for a prolonged test, wireless nodes is convenient from a patient's perspective as he/she can move around with the nodes attached to the body. Some heart problems like intermittent arrhythmia can go unnoticed in a short ECG recording. In those cases both the patient and the physician will be benefited from ECG recoding collected for an extended period, remotely.

Low power, low latency wireless systems have taken giant leaps in recent years. Wi-Fi and Bluetooth brings convenience and portability that wired systems don't provide. Emergence of low overhead protocols such COAP or MQTT ensures no perceivable latency in the system with great reliability. We used MQTT as it is fast, reliable and works with low bandwidth and fragile connections. It runs on top of TCP/IP stack making it to seamlessly connect via Wi-Fi or cellular internet with publish-subscribe architecture. This also makes possible to monitor ECG signal in real-time using a subscriber device from anywhere in the world. Along with this, cloud connectivity can provide the facility to update the system with latest research results to better diagnostic accuracy. The system can always learn without any fatigue and can only get better.

We incorporated these tools from disciplines ranging from wireless bio-sensing to artificial intelligence to build a complete

* Corresponding Author

system which is simple and economical, gives diagnostic results in real time and provides direction for next to-do, pre-hospital.

II. Method

The system which analyzes the ECG signal has to be particularly good at complex pattern recognition to determine any abnormality. Fig. 1 shows the basic block diagram of our system. A bio sensing module is designed with an Analog Devices AD8232 and Espressif ESP-32 Wi-Fi + BLE module. A pre trained Linux based compute module (we've used both Linux PC and single board computer like Raspberry Pi) along with a suitable display for easy readability. The neural network is based on the Inception V3 algorithm and utilizes deep convolutional neural network to work as a multi-level feature extractor. It was trained [6] in a separate powerful server with the initial data from PTBDB database after preprocessing them to suit the algorithm.

A. Wireless Sensor Module

We used the AD8232 signal lead ECG front end to acquire the signal. It is a fully integrated ECG front-end that requires very low supply current (~170 µA) and provides an analog signal that represents subject's ECG signal. To wirelessly transfer the acquired data to the classifier unit, we used an ESP-32 module with Tensilica core. The sensor node (Fig. 2) works as an MQTT client for low latency data communication. A small lithium battery was used to power the device. Sampling rate of 1 KHz was used with 12 KBps data rate including connection overhead.

B. The Classifier Unit

The monitoring and classification task is accomplished using a Raspberry Pi unit. When the device is in Monitor mode, it subscribes to the same MQTT topic where the ESP unit publishes. The ECG signal is plotted in real-time at a sampling rate of 1 KHz. The working process of this section is shown in Fig. 3.

The compute module classifies the ECG signal using the neural network we trained (explained in the next section). When the device is in Analyze mode, it records the ECG data for 5 seconds and then generates JPEG image of one complete ECG cycle using Hamilton Segmenter [6]. Then this image of a complete ECG cycle is classified using the neural network trained in the next step. The application can run on any Linux/Android based devices. Fig. 4 shows a working demo of the application classifying ECG signal of a healthy person.

C. Training Deep Neural Network

The first step before training a deep neural network is to collect enough labeled data. These data will be used as reference for the classifier. Using the training data, the classifier balances it's weights in all layers and save these result in a neural network which we will use to label ECG signal of Healthy or MI patient. The training data should include a good variety of patient of different age, gender, disease history and others. Also, the records should be properly classified (based on heart condition) and should have minimal external noise. We have used the PTB Diagnostic ECG Database [7] as the source of initial training data. To use the database as training resource in our algorithm, we needed to convert it to a suitable format. The ECG records were plotted in time domain and were saved in JPEG image format. Each of image included only one heart beat and featured the full ECG signal, including P wave, PR interval, QRS wave complex, ST segment and T wave. This process also used the Hamilton Segmenter to detect the R-peak of the ECG signal. In our system, we used the signal from Lead II to generate training data. Fig. 5 shows the preprocessed training data using a modified version of open source BiosPPy [8] library.

We have used the TensorFlow [9] library as the backbone of our image classifier. Instead of conventional machine learning methods for classifying ECG which uses various algorithms for detecting one or more of R-peak detection, QRS complex detection, R-R interval detection etc., we opted to use deep convolutional neural network, the Inception V3 model specifically.

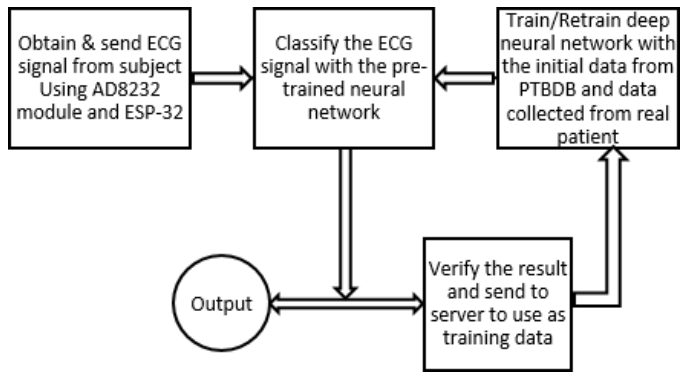

Fig. 1. Overview of the working process starting with ECG signal collection from subject to classifying and reusing the signal to improve the neural network

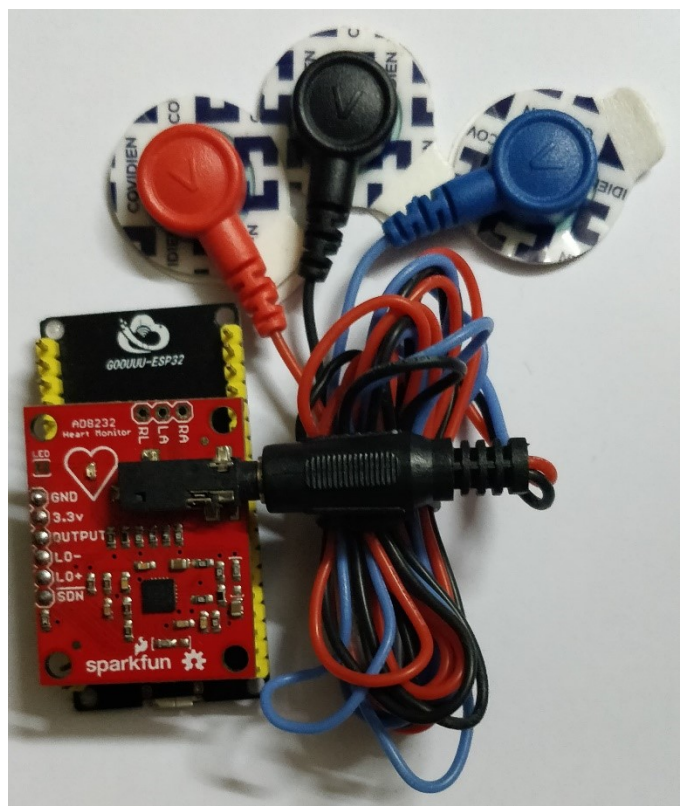

Fig. 2. Prototype of wireless bio-sensing module (2.2" x 1.1" x 0.8")

The Inception model generates bottleneck file for each of the training image which is used for the layer just before the final output layer that actually does the classification. The accuracy of the model increases as the number of training data increases as well as the quality of the training data. Fig. 6 visualizes the accuracy of the learning process over 4000 training steps. Once the training process is complete, the trained "graph" file is transferred to the compute module to classify the ECG signal from subject's body. ECG signal collected by the compute module is sent to a remote server where the neural network is retrained using this data. The incremental update of the neural network is sent back to the compute unit over the air. The accuracy of the system continuously improves as more data is collected using this system.

III. Results and Discussion

We have used the PTB database as the source of our training data. For verifying that the neural network in our system works we tested it with data from PTB and MIT-BIH [7] database as well as real patient wearing our system. TABLE I shows a comparative study of R Peak detection, Myocardial Infraction and Healthy patient prediction between proposed system and the decision of a physician.

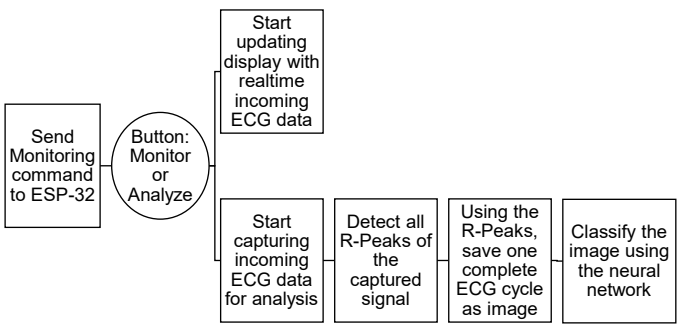

Fig. 3. ECG monitoring and analysis process

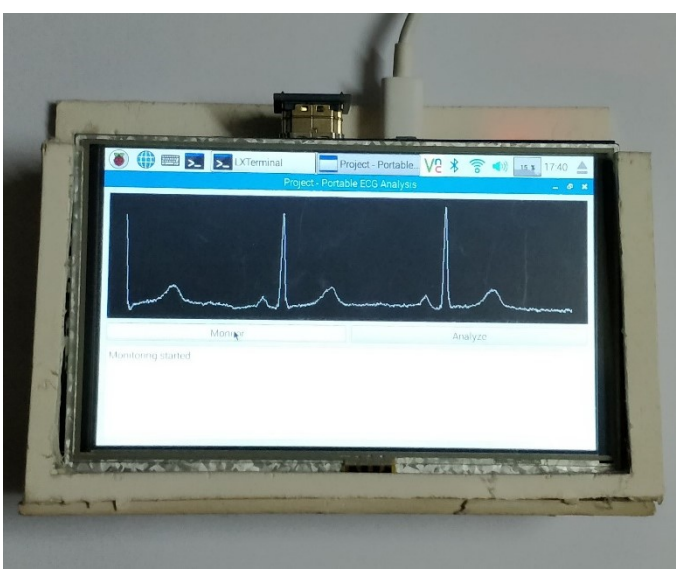

Fig. 4. GUI application for Monitor & Analyze

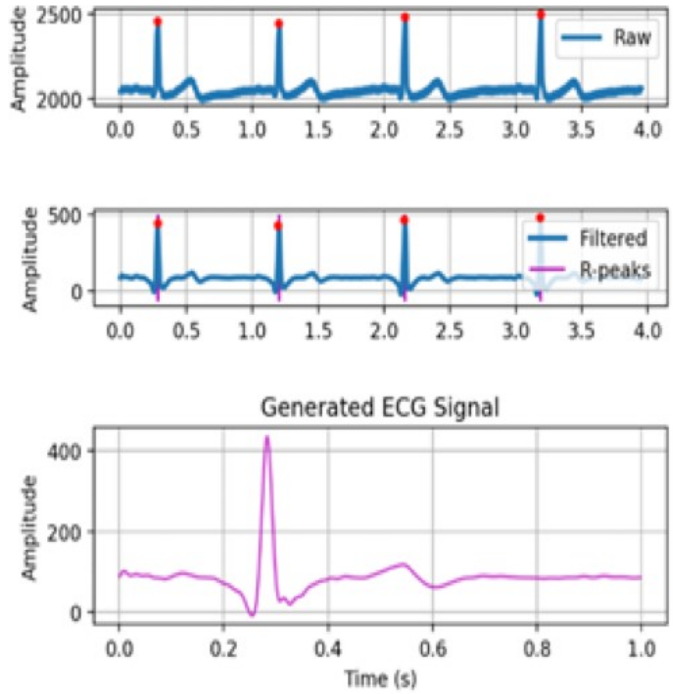

Fig. 5. Training data generation process (Using Hamilton Segmenter)

Fig. 6. Accuracy of the learning process (4000 training steps)

TABLE I. Accuracy of Detection of R Peak, Myocardial Infarction and Healthy Control

Source		R-Peak	Myocardial Infraction	Healthy
MIT-BIH	*Actual*	986	18	13
	Detected	972	13	10
	Accuracy	98.58%	72.22%	76.92%
PTB	*Actual*	1685	36	25
	Detected	1679	29	21
	Accuracy	99.64%	80.56%	84%
Real Patient	*Actual*	518	-	7
	Detected	489	-	7
	Accuracy	94.4%	-	100%

The neural network continues to improve overtime as we collect more data from our system and train the network with those. Fig. 7 shows how classification accuracy improved gradually to 84% as number of patient in training data increased from 10 patients to over 80 patients.

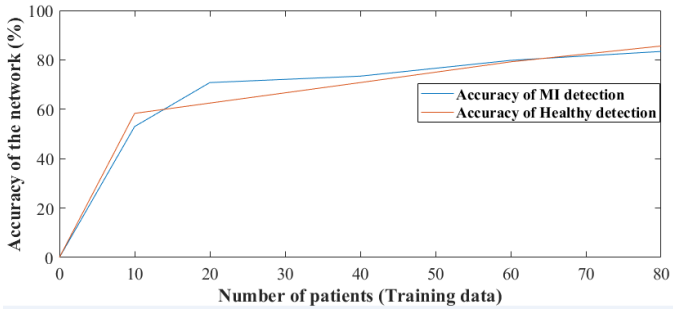

Fig. 7. Accuracy increases with the number of patient

To validate the performance of MQTT while transmitting ECG signal sampling at a rate of 1 KHz, we have tested the system latency and packet loss over a period of 10 minutes. We used two MQTT brokers, one running on the same network (a Raspberry Pi unit) as the wireless sensor module and one remote broker hosted in a server in Singapore (TABLE II).

TABLE II. MEASUREMENT OF PACKET LOSS AND LATENCY WHILE TRANSMITTING ECG SIGNAL OVER LOCAL AND REMOTE MQTT BROKER (DATA RATE – 8KBPS)

Broker	**Test duration (seconds)**	**No. of packets**			**Latency**		
		Sent	***Received***	***Loss (%)***	***Min. (ms)***	***Max. (ms)***	***Avg. (ms)***
Local	***60***	1001	1001	0	0.05	0.12	0.07
	300	5006	5006	0	0.04	0.12	0.06
	6000	10003	10003	0	0.04	0.18	0.07
Remote	***60***	996	996	0	13	46	26.3
	300	4993	4993	0	13	55	28.7
	6000	9987	9987	0	12	68	27.3

IV. CONCLUSION

This is a work in progress and the preliminary results are promising. The accuracy of the system improves overtime as more and more data gets fed into the neural network. In coming days we will incorporate variables such as Age, Race, Sex, History etc. as patient variables to get better diagnostic accuracy. We also plan to extend the system to be able to use 3 lead and 5 lead ECG signal which will make the system capable of detecting other variations of Myocardial Infraction too. We believe that a portable system utilizing all modern tools will help save many lives by providing fast diagnosis and prehospital recommendations.

ACKNOWLEDGMENT

We would like to thank Labaid group for their assistance.

REFERENCES

[1] B. Cannon, "Cardiovascular disease: Biochemistry to behaviour," Nature, vol. 493, no. 7434, pp. S2-S3, 31 January 2013.

[2] N. Bosson, "Causes of Prehospital Misinterpretations of ST Elevation Myocardial Infarction," Prehospital Emergency Care, vol. 21, no. 3, pp. 282-290, 2016.

[3] R. J. Martis, C. Chakraborty and A. K. Ray, "Wavelet-based Machine Learning Techniques for ECG Signal Analysis," Machine Learning in Healthcare Informatics , vol. 56, pp. 25-45, 2014.

[4] Q. Li, C. Rajagopalan and G. D. Cliffordb, "A machine learning approach to multi-level ECG signal quality classification," Computer Methods and Programs in Biomedicine, vol. 117, no. 3, pp. 435-447, December 2014.

[5] U. R. Acharya, H. Fujita, S. L. Oh, Y. Hagiwara, J. H. Tan and M. Adam, "Application of deep convolutional neural network for automated detection of myocardial infarction using ECG signals," Information Sciences, vol. 415–416, pp. 190-198, November 2017.

[6] N. Silberman and S. Sergio , "TensorFlow-Slim image classification model library," 13 January 2016. [Online]. Available: https://github.com/tensorflow/models/tree/master/research/slim. [Accessed 12 September 2017].

[7] P. S. Hamilton, "Open Source ECG Analysis Software," E.P.Limited, Somerville, 2002.

[8] A. L. Goldberger *et al*, "PhysioBank, PhysioToolkit, and PhysioNet: Components of a new research resource for complex physiologic signals," Circulation, vol. 101, no. 23, p. e215–e220, June 2000.

[9] PIA-Group, "BioSPPy - Biosignal Processing in Python," PIA-Group, 30 December 2016. [Online]. Available: https://github.com/PIA-Group/BioSPPy/. [Accessed 19 August 2017].

[10] M. Abadi *et al*, "TensorFlow: learning functions at scale," Association for Computing Machinery (ACM), vol. 51, no. 9, pp. 1-1, 2016.