A Deep Learning Based ECG Segmentation Tool for Detection of ECG Beat Parameters

Muhammad Salman Haleem
School of Engineering
University of Warwick
Coventry, UK
salman.haleem@warwick.ac.uk

Leandro Pecchia
School of Engineering
University of Warwick
Coventry, UK
l.pecchia@warwick.ac.uk

2022 IEEE Symposium on Computers and Communications (ISCC) | 978-1-6654-9792-3/22/$31.00 ©2022 IEEE | DOI: 10.1109/ISCC55528.2022.9912906

***Abstract*—The role of ECG segmentation tool has been pivotal in automated analysis of real-time ECG signals for detection of non-invasive cardiovascular and physiological conditions. Most of the existing approaches focus on traditional signal processing and/or traditional machine learning based approaches which are highly dependent on signal noise, inter/intra subject variability, etc. With the advent of deep learning based networks, it is possible to design and develop the classification model based on local features along with spatial and temporal context of the physiological signals. In this paper, we developed the attention based Convolutional Bidirectional Long Short Term Memory (Conv-BiLSTM) architecture network based on local beat features and temporal sequencing while correlating ECG beat across different positions. The performance of our ECG segmentation tool has been evaluated against the state-of-the art approaches in terms of ECG segmentation and fiducial point detection accuracy. The ECG segmentation accuracy was 95% whereas fiducial point detection accuracy was 99.4%.**

Keywords—Deep learning, ECG segmentation, ECG parameter detection, fiducial point detection

I. Introduction

The accurate segmentation of ECG beats and detection of fiducial points is pivotal for the analysis of ECG signals and detection of certain cardiac conditions [1]. In the current clinical practice, the ECG signals are manually analysed by the clinicians for the determination of these cardiac conditions. Besides with the advancement of digital technology and the wearables for ECG and other physiological monitoring, recent studies suggest the analysis of ECG signals for non-invasive detection of glycaemic events [2, 3] as well as monitoring of mental stress [4]. However, the manual analysis of ECG signals is not only time consuming but also subject to the clinical expertise and experience. Therefore, the design and development of automated ECG segmentation tool has been of great interest.

The changes in ECG signal can be detected based on changes in waves of an ECG beat (such as P, QRS and T waves) (See Figure 1) which can be quantified by ECG parameters. These include shortening in P-R interval, ST-segment depression, T-wave flattening etc. [5, 6]. These ECG parameters require accurate detection of fiducial points (starting, peak and end points of P, QRS and T waves). The accurate detection of fiducial points is highly dependent on the accurate segmentation of ECG beat waves. There are several automated tools based on signal processing and traditional machine learning based approaches which have been offered for the detection of these fiducial points [7]. However, their accuracy, robustness and adaptability to other datasets have been questionable.

In the recent years, the design and development of deep learning and big data methods has now become pivotal for the analysis of ECG as well as other physiological signals [2, 8]. Deep Learning approaches have the capability to capture the complex patterns of physiological signals based upon their spatial as well as temporal context [9]. Besides, traditional machine learning approaches may require computationally extensive feature selection procedures which may be incompatible to analyse patterns from big data of physiological signals.

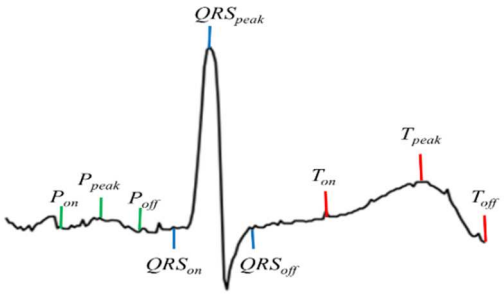

Figure 1. An example of ECG with fiducial points location

In this study, we designed and developed Deep Learning based ECG segmentation tool for automatic segmentation of ECG beat waves and detection of the fiducial points. We designed and validated our ECG segmentation tool on public available QT Database [10]. Our methodology outperformed most of existing state-of-the-art approaches which are based on traditional signal processing and machine learning techniques.

The paper is organised as follows: Section II discusses the existing literature on the ECG segmentation tool. Section III

Authorized licensed use limited to: Abhishek Pillai. Downloaded on September 20,2025 at 06:59:17 UTC from IEEE Xplore. Restrictions apply.

discusses our proposed methodology. Section IV presents the result and Section V outlines the conclusion.

II. Literature

We classified the state-of-the-art methods into two different categories i.e. i) *fiducial point detection* methods and ii) *segmentation* methods. *Fiducial point detection* methods are related to locate ECG related landmarks (such as starting, ending and peak points of P, QRS and T waves). On the other hand, *segmentation* methods perform segmentation of the waves, resulting in extracting individual beats.

Among *fiducial point detection* methods, most of the existing are based on traditional signal processing methods [7]. These include low pass differentiation [11], discrete wavelet transform (DWT) [12] where methodology was improved using phasor transform [13] and multi-scale morphological transform [14]. The signal processing methods were further advanced using band-pass Butterworth filtering followed by continuous wavelet transform (CWT) for noisy signals [15]. Besides, with the advancement of machine learning methods, Hughes et al. [16] deployed Hidden Markov Model (HMM) for detecting fiducial points based on features obtained from DWT. However, these methods are less robust in detecting and featuring ECG segments across different heart conditions [17].

Among ECG segmentation methods, the Deep Learning approaches have shown promising results [7, 18]. However, most of these techniques have been designed to locate and segment the waves present in an ECG beat. Out of these based approaches, Convolutional Neural Networks (CNN) have been quite successful in localization and segmentation of ECG waves as they are able to extract their local features [19]. Besides Long Short Term Memory (LSTM) have also been deployed to segment the ECG beats due to their ability to train features based on temporal context. Nevertheless, Wang et al. [20] designed and developed knowledge based deep learning encoder-decoder networks in order to detect the fiducial points.

Our study followed the two-step procedure. In the first step, we designed and developed CNN-BiLSTM based network with attention mechanism for ECG segmentation based on time variant and local wave features while self-correlating the ECG sequences. In the second step, we determined the fiducial points based on segmentation results while removing the misclassifications. The details are provided in the following sections.

III. Methods

The block diagram of ECG segmentation and fiducial point detector tool is mentioned in Figure *2*. We used the fiducial points clinically annotated in the QT Database [10] in order to train the segmentation tool. The ECG signals were then preprocessed followed by training the Attention based Conv-BiLSTM network.

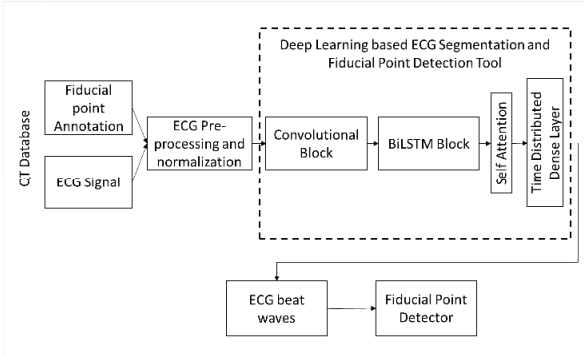

Figure 2. Block Diagram of ECG Segmentation and Fiducial Point Detector Tool

A. Datasets

This study was carried out using PhysioNet's QT database, a dataset of 105 2-lead ambulatory ECG recordings with P, QRS and T waves clearly annotated by their peaks, starting point and ending point [10]. The records were chosen from existing ECG databases, including the MIT-BIH Arrhythmia Database, the European Society of Cardiology ST-T Database, and several other ECG databases collected at Boston's Beth Israel Deaconess Medical Center. Further information can be accessed here https://physionet.org/content/qtdb/1.0.0/. Out of 105 subjects, 11 subjects were excluded as there were no annotations for either of P, QRS or T wave.

B. ECG Segmentation Tool

Our ECG segmentation tool was based on two main steps: 1) ECG pre-processing and 2) Attention based Conv-BiLSTM network.

1) ECG pre-processing: The pre-processing of the ECG was performed in order to remove noise and to standardize across all training examples. Firstly we removed the baseline wander in order to remove the variable isoline occurred due to subject movement or electrical noise. We performed the signal decomposition using Daubechies wavelet transform (db8) and removed the lowest energy subband (cA8) [21]. We then standardized each ECG signal at zero mean and unit variance.

2) Attention based Conv-BiLSTM network: The idea behind the attention based Conv-BiLSTM was three fold: Firstly, we aimed to train on the basis of local wave features. Secondly, we needed to provide the temporal context of the ECG beats. Thirdly, we provided the attention mechanism to the training model based on temporal correlation. We had 4 blocks present in the attention based Conv-BiLSTM network:

a) Convolution Block: It is one-dimensional convolutional layer which convolves the signal x_{1d} with the kernel initialized by 'glorot_uniform' in temporal dimension. The kernel weights W_{1d} are updated after every iteration.These can be represented as:

$$y_{1d} = [\![W_{1d} \otimes x_{1d} + b)$$

Authorized licensed use limited to: Abhishek Pillai. Downloaded on September 20,2025 at 06:59:17 UTC from IEEE Xplore. Restrictions apply.

b) BiLSTM Block: It involves training the signal based on the temporal context. We have added Bi-directional LSTM network in order to train the temporal context in both directions of the time. This can be represented as:

$$h_t = Dropout\left(\left[LSTM\left(y_{1d_t}, \vec{h}_{t-1}\right), LSTM\left(y_{1d_t}, \overleftarrow{h}_{t+1}\right)\right]\right)$$

where $\vec{h}_t$ are $\overleftarrow{h}_t$ are forward and backward LSTM outputs

c) Self Attention Block: This block correlates the ECG sequences temporally in order to compute abstractive representation based on bidirection temporal context. The attention weights can be represented as

$$\sigma_{max}(z)_i = \frac{e^{dot(h_{t_i}, h_{t_i})}}{\sum_{j=1}^{J} e^{dot(h_{t_j}, h_{t_i})}}$$

where $dot(h_{t_i}, h_{t_i})$ is attention score which is the dot product of LSTM output by itself; J is the total number of LSTM outputs, σ_{max} the softmax function representing the attention weights.

d) Time Distributed Dense Layer: It returns the sequences with segments of the labels.

After the detection of ECG waves, we determine the fiducial points such as P_{on}, P_{off}, QRS_{on}, QRS_{off}, T_{on}, and T_{off} which are starting and ending points of P, QRS and T waves.

IV. Result

We compared the performance of our ECG segmentation tool as a two-fold process. In the first fold, we compared our attention based Convolutional-BiLSTM architecture with state-of-the-art approaches and common deep learning based architectures in terms of segmentation accuracy. In the second fold, we compared our method with existing approaches based on signal processing and traditional machine learning methods in terms of fiducial points detection accuracy. In order to evaluate the fiducial point detection accuracy, we calculated absolute differences of each fiducial point detected by our segmentation tool compared to clinical annotations and was considered detected if it had absolute difference of less than 120 ms. We performed subject-wise classification accuracy across 94 subjects obtained from QT database, which contains the ECG signals from different databases that collect patients with several types of heart conditions.

TABLE I. Accuracy performance comparison (in %) of our Attention based Conv-BiLSTM network with other deep learning architectures and existing state-of-the-art approaches with traditional machine learning approaches

State-of-the-art	P	QRS	T	All Segments
HMM on raw ECG data [16]	5.50	79	56.03	51.43
HMM on wavelet encoded ECG [12]	74.20	94.40	88.23	86.80
BiLSTM [22]	93.83	95.74	90.30	93.64
Conv-BiLSTM	94.69	96.04	91.78	94.44
Conv-BiLSTM-Attention	**94.77**	**97.05**	**91.77**	**94.89**

The comparative results in terms of ECG segmentation accuracy have been presented in Table I. The results show that the deep learning architectures have significantly better performance in terms of segmenting the ECG beat waves compared to existing approaches based on traditional Hidden Markov Model and wavelet based methods [12, 16]. Besides, Adding the convolutional layer before the BiLSTM architecture also improved the performance significantly compared to ECG segmentation performance based on BiLSTM layer only. This shows that ECG segmentation is highly dependent on the features representing the local features as well as temporal context. Adding the attention mechanism on the top of Conv-BiLSTM layer introduced the abstractive representation based on bidirectional temporal context; resulting in improved segmentation performance.

The comparative results in terms of fiducial point detection accuracy has been presented in Table II. The results show that the proposed method had outperformed most of the existing approaches especially in terms of detecting P-wave and T-wave fiducial points. Our all fiducial-point detection sensitivity was 99.4%, to which, the deep learning method proposed by Wang et. al [20] was the nearest due to involvement of deep learning with domain knowledge. This shows that deep learning approaches are more reliable to determine the ECG beat segments and fiducial point detection for ECG measurements compared to the methods based on traditional machine learning and signal processing methods.

TABLE II. Performance comparison (in %) based on fiducial point detection accuracy of our architecture with other state of the art approaches based on signal processing and traditional machine learning technques

State-of-the-art	*Pon*	*Poff*	*QRSon*	*ORSoff*	*Ton*	*Toff*	*Overall*
Laguna [11]	94.0	98.0	99.9	99.7	95.1	94.5	96.9
Martinez [12]	98.9	98.8	100.0	100.0		100.0	99.9
Sun [14]	97.2	94.8	100.0	100.0	99.8	99.6	98.6
Martinez [13]	98.7	98.7	99.9	99.9	99.2	99.2	99.2
Vazquez [15]	98.9	99.7	100.0	100.0	93.5	90.6	97.1
Hughes [16]	96.5	98.5	100.0	99.5		95.3	81.6
Wang [20]	99.4	99.4	100.0	100.0	99.6	99.7	99.6
Our Method	**100.0**	**99.8**	99.8	98.5	98.5	**100.0**	**99.4**

V. Conclusion

In this paper, we presented the deep learning based approach for segmentation of the ECG waves and detection of the fiducial points. The automated tool can be used to monitor real-time ECG signal in order to detect different physiological conditions such as cardiovascular conditions, glycaemic event detection, mental stress etc. The deep learning based segmentation tool was composed of 3 main blocks i.e. bidirectional LSTM block, convolutional neural network block and attention based mechanism. The bidirectional LSTM block has been used to determine the features based on temporal context. The convolutional neural network was used to extract the spatial features at specific time point. The attention based mechanism was used to

Authorized licensed use limited to: Abhishek Pillai. Downloaded on September 20,2025 at 06:59:17 UTC from IEEE Xplore. Restrictions apply.

compute the abstractive representation based on bidirectional temporal context.

We compared the performance of our ECG segmentation tool in terms of ECG segmentation accuracy and fiducial point detection accuracy. Our ECG segmentation tool achieved the ECG segmentation accuracy of 95% and fiducial point detection accuracy of 99.41%. In terms of both measures, our tool outperformed most of the existing state-of-the-art approaches which were based on traditional machine learning and signal processing based approaches. This demonstrates the significance of deep learning for automated real-time detection of physiological signal parameters. Besides, the results also showed that the combination of these blocks significantly improved the ECG segmentation performance compared to the deep learning based architectures representing just spatial features or temporal context only. Our future study involves signal processing methods to the deep learning based architectures for improved performance of ECG segmentation and fiducial point detection on ECG signals. Besides we also aim to utilize our segmentation tool for detection of physiological events based on changes in ECG beat parameters.

REFERENCES

[1] M. S. Haleem *et al.*, "Time adaptive ECG driven cardiovascular disease detector," *Biomedical Signal Processing and Control,* vol. 70, p. 102968, 2021.

[2] M. Porumb, S. Stranges, A. Pescapè, and L. Pecchia, "Precision medicine and artificial intelligence: a pilot study on deep learning for hypoglycemic events detection based on ECG," *Scientific reports,* vol. 10, no. 1, pp. 1-16, 2020.

[3] M. Porumb, C. Griffen, J. Hattersley, and L. Pecchia, "Nocturnal low glucose detection in healthy elderly from one-lead ECG using convolutional denoising autoencoders," *Biomedical Signal Processing and Control,* vol. 62, p. 102054, 2020.

[4] R. Castaldo, L. Montesinos, P. Melillo, C. James, and L. Pecchia, "Ultra-short term HRV features as surrogates of short term HRV: a case study on mental stress detection in real life," *BMC medical informatics and decision making,* vol. 19, no. 1, pp. 1-13, 2019.

[5] L. L. Nguyen, S. Su, and H. T. Nguyen, "Identification of hypoglycemia and hyperglycemia in type 1 diabetic patients using ECG parameters," in *2012 Annual International Conference of the IEEE Engineering in Medicine and Biology Society*, 2012: IEEE, pp. 2716-2719.

[6] L. Nguyen, S. Su, and H. T. Nguyen, "Effects of hyperglycemia on variability of RR, QT and corrected QT intervals in Type 1 diabetic patients," in *2013 35th Annual International Conference of the IEEE Engineering in Medicine and Biology Society (EMBC)*, 2013: IEEE, pp. 1819-1822.

[7] I. Beraza and I. Romero, "Comparative study of algorithms for ECG segmentation," *Biomedical Signal Processing and Control,* vol. 34, pp. 166-173, 2017.

[8] E. Martinez-Ríos, L. Montesinos, M. Alfaro-Ponce, and L. Pecchia, "A review of machine learning in hypertension detection and blood pressure estimation based on clinical and physiological data," *Biomedical Signal Processing and Control,* vol. 68, p. 102813, 2021.

[9] O. Faust, Y. Hagiwara, T. J. Hong, O. S. Lih, and U. R. Acharya, "Deep learning for healthcare applications based on physiological signals: A review," *Computer methods and programs in biomedicine,* vol. 161, pp. 1-13, 2018.

[10] P. Laguna, R. G. Mark, A. Goldberg, and G. B. Moody, "A database for evaluation of algorithms for measurement of QT and other waveform intervals in the ECG," in *Computers in cardiology 1997*, 1997: IEEE, pp. 673-676.

[11] P. Laguna, R. Jané, and P. Caminal, "Automatic detection of wave boundaries in multilead ECG signals: Validation with the CSE database," *Computers and biomedical research,* vol. 27, no. 1, pp. 45-60, 1994.

[12] J. P. Martínez, R. Almeida, S. Olmos, A. P. Rocha, and P. Laguna, "A wavelet-based ECG delineator: evaluation on standard databases," *IEEE Transactions on biomedical engineering,* vol. 51, no. 4, pp. 570-581, 2004.

[13] A. Martínez, R. Alcaraz, and J. J. Rieta, "Application of the phasor transform for automatic delineation of single-lead ECG fiducial points," *Physiological measurement,* vol. 31, no. 11, p. 1467, 2010.

[14] Y. Sun, K. L. Chan, and S. M. Krishnan, "Characteristic wave detection in ECG signal using morphological transform," *BMC cardiovascular disorders,* vol. 5, no. 1, pp. 1-7, 2005.

[15] C. R. Vázquez-Seisdedos, J. E. Neto, E. J. Marañón Reyes, A. Klautau, and R. C. Limão de Oliveira, "New approach for T-wave end detection on electrocardiogram: Performance in noisy conditions," *Biomedical engineering online,* vol. 10, no. 1, pp. 1-11, 2011.

[16] N. Hughes, L. Tarassenko, and S. J. Roberts, "Markov models for automated ECG interval analysis," *Advances in Neural Information Processing Systems,* vol. 16, pp. 611-618, 2003.

[17] Y. Xiang, Z. Lin, and J. Meng, "Automatic QRS complex detection using two-level convolutional neural network," *Biomedical engineering online,* vol. 17, no. 1, pp. 1-17, 2018.

[18] A. N. Londhe and M. Atulkar, "Semantic segmentation of ECG waves using hybrid channel-mix convolutional and bidirectional LSTM," *Biomedical Signal Processing and Control,* vol. 63, p. 102162, 2021.

[19] H. Abrishami, M. Campbell, C. Han, R. Czosek, and X. Zhou, "P-QRS-T localization in ECG using deep learning," in *2018 IEEE EMBS International Conference on Biomedical & Health Informatics (BHI)*, 2018: IEEE, pp. 210-213.

[20] J. Wang, R. Li, R. Li, and B. Fu, "A knowledge-based deep learning method for ECG signal delineation," *Future Generation Computer Systems,* vol. 109, pp. 56-66, 2020.

[21] C. Vonesch, T. Blu, and M. Unser, "Generalized Daubechies wavelet families," *IEEE Transactions on Signal Processing,* vol. 55, no. 9, pp. 4415-4429, 2007.

[22] H. Abrishami, C. Han, X. Zhou, M. Campbell, and R. Czosek, "Supervised ecg interval segmentation using lstm neural network," in *Proceedings of the International Conference on Bioinformatics & Computational Biology (BIOCOMP)*, 2018: The Steering Committee of The World Congress in Computer Science, Computer …, pp. 71-77.

Authorized licensed use limited to: Abhishek Pillai. Downloaded on September 20,2025 at 06:59:17 UTC from IEEE Xplore. Restrictions apply.