ResearchGate

See discussions, stats, and author profiles for this publication at: https://www.researchgate.net/publication/329714550

Wireless ECG Monitoring System: Design, Construction and Analysis

Article · April 2018

CITATION
1

READS
10,037

4 authors, including:

Nazneen Akhter
Swami Vivekananda College of Computer Science
38 PUBLICATIONS **244** CITATIONS

SEE PROFILE

A. R. Khan
Maulana Azad College
43 PUBLICATIONS **135** CITATIONS

SEE PROFILE

Gulam Rabbani
Maulana Azad College
79 PUBLICATIONS **548** CITATIONS

SEE PROFILE

All content following this page was uploaded by Nazneen Akhter on 17 December 2018.

The user has requested enhancement of the downloaded file.

Wireless ECG Monitoring System: Design, Construction and Analysis

R. H. Sayyed[1] , Nazneen Akhtar [2], A. R. Khan [3], Gulam Rabbani [4]
[1]Asst. Prof, Department of Electronic Science, Abeda Inamdar Sr. College, Pune, India
[2]Asst. Prof, PG Dept. of Computer Science, Maulana Azad College, Aurangabad, India
[3] Head PG Dept. of computer Science, Maulana Azad College, Aurangabad, India
[4] Director, Dr. Rafiq Zakaria Centre for Higher Learning and Advanced Research, Aurangabad, India
Email - [1]sayyed.rabia76@gmail.com; [2] ark5230@yahoo.com ; [3] dr_grabbani@yahoo.com

Abstract: *The accurate Electrocardiogram (ECG) and heart rate information is one of the fundamental aspects for the different kinds of heart functioning disorder identification. The work proposed is a* ***universal simple portable, low cost system to acquire ECGs****.This paper deals with the step by step analysis of the ECG system. This ECG system is able to acquire display and record the patient's real time Electrocardiogram (ECG) data. System hardware comprises of an electrode as part of signal input, signal conditioning component for manipulating signal, the ARM Cortex M3 LPC1768 unit to perform signal processing and a wireless communication module GSM/GPRS and internet together in Wireless sensor Network under HTTP protocol to database server containing clinic data which can be accessed through web application. Software is developed in embedded C language to record and visualise ECG signal in real time. Digital Storage Oscilloscope is used to monitor ECG for real time and will display Heart Rates, Cardiac Cycle and intervals of some critical components, which helps the* ***physicians in heart disease diagnosis****. In addition the system is easy to use in different environments.*

KEYWORDS: *Electrocardiogram, Signal Processing, Hypertext Transfer Protocol, Wireless Sensor Network,*

1. INTRODUCTION:

Today Wireless Technology is used almost everywhere with devices being available for sending audio, video, security as well as human physiological data. An Electrocardiogram is a graphical record of bioelectrical signal generated by the human body during cardiac cycle. ECG graphically gives useful information that relates to the heart functioning by means of a baseline and waves representing the heart voltage changes during a period of time, usually a short period. In medical field, it plays an important role because of its ability to transmit and receive information over long distances. Post examination treatment recommended by the doctors can be communicated to patients located anywhere in the world. With the technological, it has become possible to design and develop low cost, home based healthcare ECG monitoring system. This portable ECG is monitoring the patients with 3-electrodes that measures the body information which helps for routine diagnostic applications in cardiology. As ECG signal is of very low amplitude, instrumentation amplifier is used to amplify it at the beginning stage so that ECG signal should not get loaded and also by using filter circuit the signal to noise ratio is improved.

After amplification and filtering the information is saved in a data base and data is sent over wireless communication to a monitoring system, where the data is examined, and if it is out of health limits a message is sent to notify the doctor. This simple low cost ECG system significantly reduces the length of the stay among those patients who have had an acute episode, with medical requirements of continual monitoring. This research paper is based on design, implementation and step by step analysis of ECG system which will be useful to monitor the recorded parameters for diagnosis of patient's health.

1.1 Waves and vectors generated in the heart muscle

The various waves and vectors generated in the heart muscles during each heartbeat are shown in figure1.1.1. The "P" wave is the representation of the electrical activity associated with depolarization of atrias. Thus, the "P" wave vector represents a depolarisation wave travelling from the Sinoatrial node toward the atrioventricular node. As the wave propagates the area around the atrioventricular becomes electrically positive and the area near the sinoatrial node becomes negative. During this the lower part of the body becomes positive and the upper part negative. This results into positive 'P' wave. At the outset of 'P' wave, atrias contract. Then they repolarize. Atrial depolarization takes place in one general direction. The depolarisation of ventricles has three directions .Immediately, after the delay period, the depolarization of the ventricle begins in the septal area just below the atrioventricular node and the depolarization wave moves towards the right side. This is because the walls of the right ventricle are thin compare to the left ventricle. Here the depolarization wave travels from left side to the right side. Due to this the left side of the body becomes negative and the right side becomes positive. This movement or vector is recorded as 'Q' wave. The amplitude of 'Q' wave is less than 'P' wave and is not seen in some recordings (Ajithkumar, 2003) .

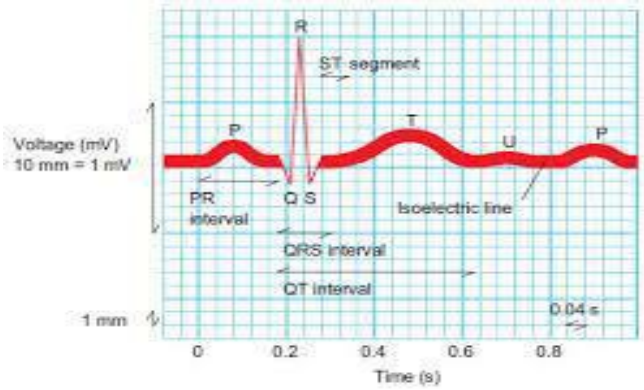

Figure 1.1.1: ECG Waveform

The 'R' Vector represents the depolarization of most of the remaining ventricular muscles. The ventricular muscles are massive compared to the atrial muscles; hence the 'R' wave vector has large amplitude or length. Its direction being similar to the 'P' wave, it appears positive. The 'R' wave is the most prominent feature in the ECGs. This normal amplitude of 'R' wave is approximately 1mv when measured at the surface of the body and about 40 millivolts when measured inside the heart. Figure 1.1.2 shows all the vectors associated with the Electrocardiogram.

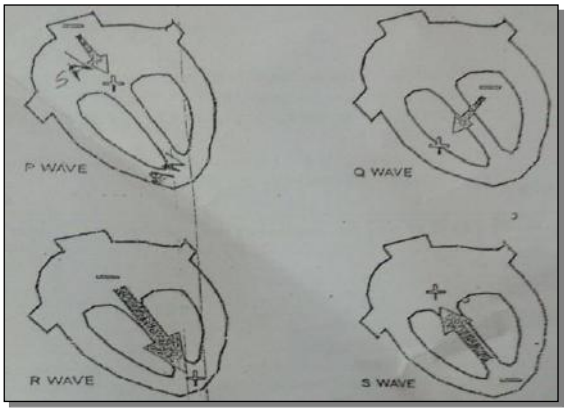

Figure 1.1.2: Vectors associated with the Electrocardiogram

The 'S' Wave vector represents the depolarization of the remaining portion of the ventricles. For 'S' wave the apex area of the heart becomes negative and the atrioventricular node area becomes positive. Thus, the recorded 'S' wave appears negative. The amplitude of 'S' wave is greater than the amplitude of the 'Q' wave. The 'QRS' complex is the combined result of depolarisation of the ventricles. Atria are in repolarisation prior to this time interval and the amplitude of the atrial repolarization wave is very small. Therefore, the base line of the ECG waveform between the end of 'P' wave and the start of the QRS complex normally becomes flat. As the ventricles begin to depolarise they contract, then they repolarize. Ventricular repolarization is represented by the 'T' wave. The 'U' wave, if present, is generally believed to be the result of after potentials in the ventricular muscle. During the QT interval ventricles are refractory.

The following table 1.1.3 shows the typical amplitudes and timing details of an ECG waveform.

Table 1.1.3: Typical Amplitudes and Timing details of an ECG waveform

ECG Wave	Peak Amplitude in mV	Intervals/Segments	Time in Seconds
P wave	0.2	PR Interval	0.12 to 0.20
Q wave	0.1	QRS Interval	0.06 to 0.10
R wave	0.5 to 1.5	ST Interval	0.18 to 0.30
S wave	0.2	QT Interval	0.35 to 0.40
T wave	0.1 to 0.5	PR Segment	0.04 to 0.08
		ST Segment	0.12 to 0.16

Typically the total time required for one complete cycle of the heart's electrical activity ranges from approximately 0.4 to 0.6 second. The inverse of the time difference between the normal heart beats gives the Heart Rate. Heart Rate is expressed in beats per minute (bpm) unit.

HR (bpm) = 60 / RR continuation interval (sec)

1.2 ECG Sensors/Electrodes

The electrical signals generated inside our body are not in a pure electrical form. They are ionic currents or migration of positive and negative ions from one point to another. The bioelectric signals, before they can be put into the amplifier for subsequent record or display, have to be picked up from the surface of the body. This is done by using electrodes. Electrodes make a transfer from the ionic conduction in the tissue to the electronic conduction, which is necessary for making measurements.

There are two types of electrodes used in practice

1. Surface electrodes or disc electrodes and
2. Deep- seated electrodes or needle electrodes

In this wireless ECG system the suction cup electrodes are used. The surface electrodes picks up potential from the tissue surface when placed over it, without damaging the live tissue, whereas the deep-seated electrodes senses the potential difference arising inside the live tissue or cell.

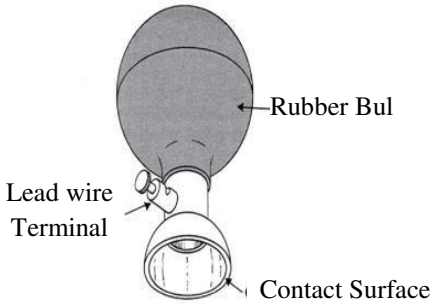

Figure1.2.1: Suction Electrode

Electrodes play important role in patient monitoring. The electrodes used for sensing biopotentials must be comfortable to the patient and should not produce unacceptable artifacts. Surface electrodes are very commonly used in patient monitoring. In order to obtain clear contact or low impedance and avoid movement artifacts, an electrolyte or conductive jelly is usually employed as an interface between the electrode and the surface of the body (Ajithkumar, 2003).

2. METHODS:

Wireless ECG monitoring system consists of 5 blocks, signal input, signal conditioning, signal processing, wireless communication using GSM/GPRS and computer software using embedded C language. Furthermore, the block diagram of wireless ECG monitoring system is shown in Figure2.1.

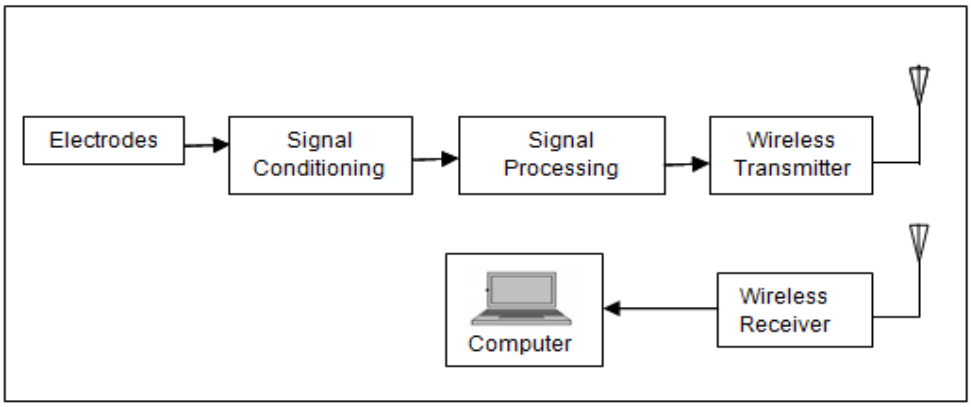

Figure 2.1: Block Diagram of Wireless ECG Monitoring System

2.1 Signal Input

The Electrocardiogram is a valuable aid in the diagnosis of a wide range of cardiac conditions. The electrocardiogram (ECG) is the recording of the potentials at selected location of the body surface and is related to the electrical activity of heart. The heart performs its function of pumping blood through the circulatory system which in turn is related to this ECG. Electrode is used for sensing bioelectric potential caused by muscle cells as a result of

mechanical events inside heart muscle are a certain sequence of electrical activity or ECG signal. The 3-lead ECG is generally used in pre-hospital care, for continuous monitoring of a patient having had some form of cardiac event. Einthoven's Triangle is formed when the three ECG leads are placed on the patient's body. Most of the Electrocardiogram machines use12-Lead system, whereas in this paper a 3-lead system is used. Both feature 3 electrodes placed on the limbs. If the heart's electrical activity is viewed as a simple dipole, these three leads verify the projection of this dipole onto the sides of the 'Einthoven Triangle' (Figure 2.1.1).

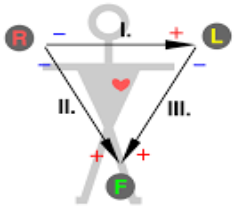

Figure 2.1.1: The Einthoven Triangle and 3- lead electrode

ECG signal is totally valuable, making it a conventional system used in hospitals by both doctors and nurses. The aim of this work is to develop a wireless system to provide a more user-friendly device. By removing the long cables between nodes, the patient is easily able to move around without the inconvenience of wires, while also being able to place the electrodes on themselves without being long delayed by leads. Similarly it serves the doctor or nurse with a trouble-free way to the patient's ECG signal. In addition, software could permit ECG signals to be saved and sent possibly by using Internet and cloud to other distant places globally. In fact, for patients in rural areas and remote places difficult to reach an ECG record could be sent via electronic mail to a doctor for examination.

2.2 Signal Conditioning

Typically, ECG signal obtained from an electrode is very small in amplitude, and ranged around ± 2.5mV, is a very weak signal. To amplify low amplitude ECG (Electrocardiogram) signals this system uses variable gain amplifiers. Gain of the amplifiers is adjusted according to the specifications of the in built analogue to digital converter. This system uses two stages to provide gain of 1001. It has been decided that the instrumentation amplifier provides gain of 7 and the inverting amplifier provides gain of 143. So the total gain provided by the system is 1001. The AD620 is a low cost, high accuracy instrumentation amplifier. This instrumentation amplifier offers advantages such as high CMRR, adjustable gain and high input impedance. High CMRR of the AD620 greatly reduce the interference caused due to common mode voltages.

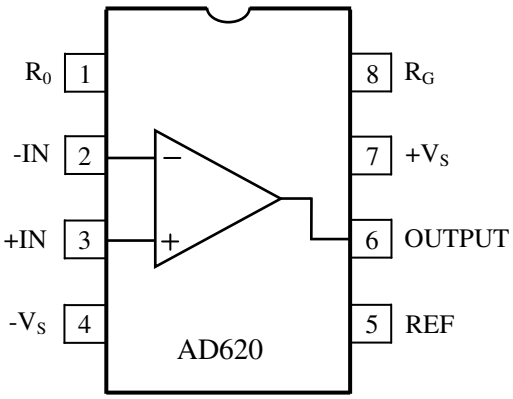

Figure 2.2.1: Top View of AD620

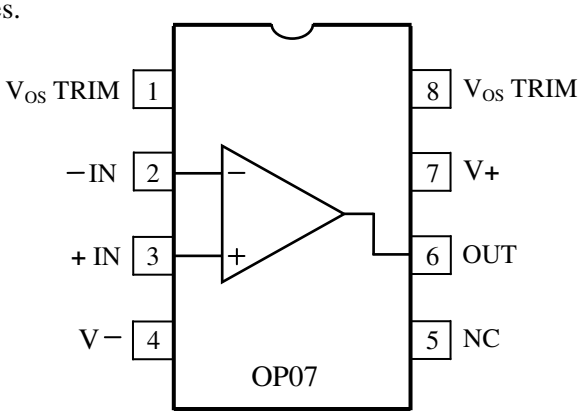

NC = No Connect

Figure 2.2.2: Pin Configuration of OP07

The OP07 has low offset and high open-loop gain which makes it particularly useful for high gain instrumentation applications.

2.3 Microcontroller

For this system we are using ARM Cortex M3 LPC1768 which is considered as heart of the system. This controller has an in built ADC for converting analog to digital converter operation. From microcontroller the digital samples are sent via UART to GPRS module.

Programming of the microcontroller is done in embedded C language code. The LPC1768 processor is highly configurable enabling a wide range of application from those requiring memory protection and powerful trace technology to cost sensitive devices requiring minimal area. For converting analog signals of ECG into digital the

LPC1768 has an in built 12-bit successive Approximation ADC which is multiplexed among 8 input pins. It has several features which are useful to us. It is very useful for digitizing the bipolar ECG signals. It gives parallel 12-bit output for further processing.

2.4. GPRS Communication

In this paper we are using SIM900A for GPRS communication. SIM900A uses GPRS to transmit the data on remote server. The communication protocol between SIM900A and server is HTTP. We have used HTTP post method for sending ECG data to server or cloud. Because of remote server the communication range is unlimited.

2.5 Cloud / WEB Application

In order to standardize, the hardware and associated software and provide basic and bare minimum hardware units required to have an embedded system work, standard embedded boards are developed with on board hardware components like voltage regulatoe, A / D converter and so on.These boards are tailored made of particular application like medical Electronics (Grasshopper.iics,2014).The internet of Things(IOT) is the interconnection of mainly identifiable embedded computing devices within the existing internet infrastructure. So Internet of Things basically is connecting embedded system to internet.The most standard protocol by far is the Hypertext Transfer Protocol(HTTP), the protocol of the world wide web(Cuno Pfister,2011). HTTP describes how a client interacts with a server, by sending request messages and receiving response messages over TCP/IP as Shown below in Figure 2.5.1.

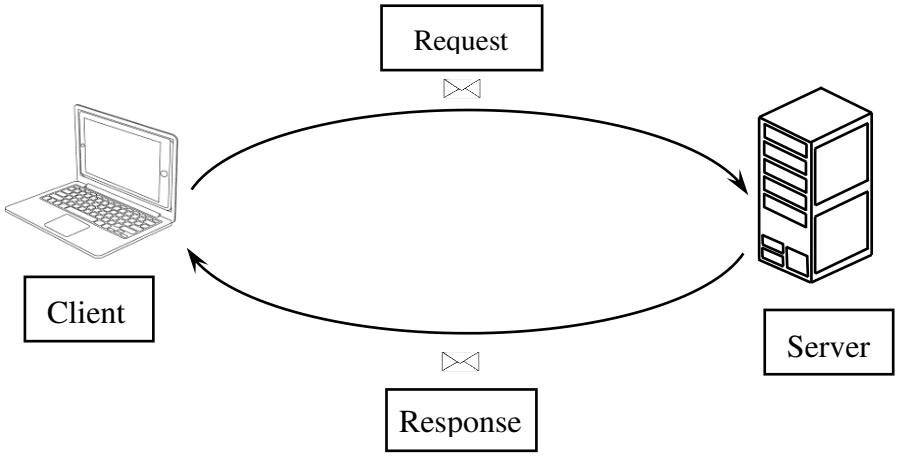

Figure 2.5.1: Client sends request message, Server answers with response

Web browser are the most popular HTTP clients, but we can easily write our own clients and our own servers. If we use a web browser to access a device, the device has the role of a web browser, providing a web service over the internet. HTTP uses uniform Resource Identifiers (URIs) to tell the server which resource the client wants to read, write, create or delete. For the HTTP protocol, port 80 is used by default unless another port is chosen explicity, perhaps for testing purposes.The path is called request URI in HTTP; it denotes the target resource of an HTTP request.Web browsesr mostly issue GET requesst, which make up the vast majority of HTTP requests.

In Monitoring Applications, a device produce data, that is measurements from its attached sensors. for such applications, the interaction patterns are suitable: data flows from the device to another computer; the device is either client or server.

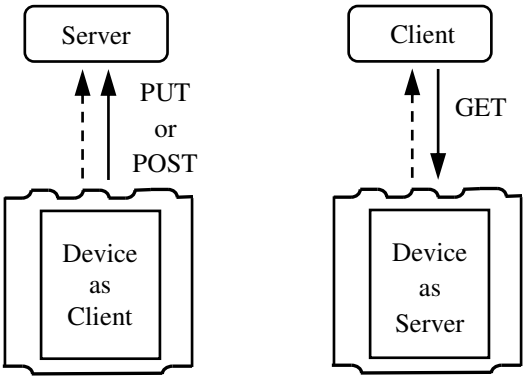

Figure 2.5.2: Web Interaction Pattern

In this system digital signals are captured through GPRS and stored on the server and displayed on the web browser and all over the world the doctor can access the ECG graph anywhere anytime.

3. HARDWARE DESIGN:

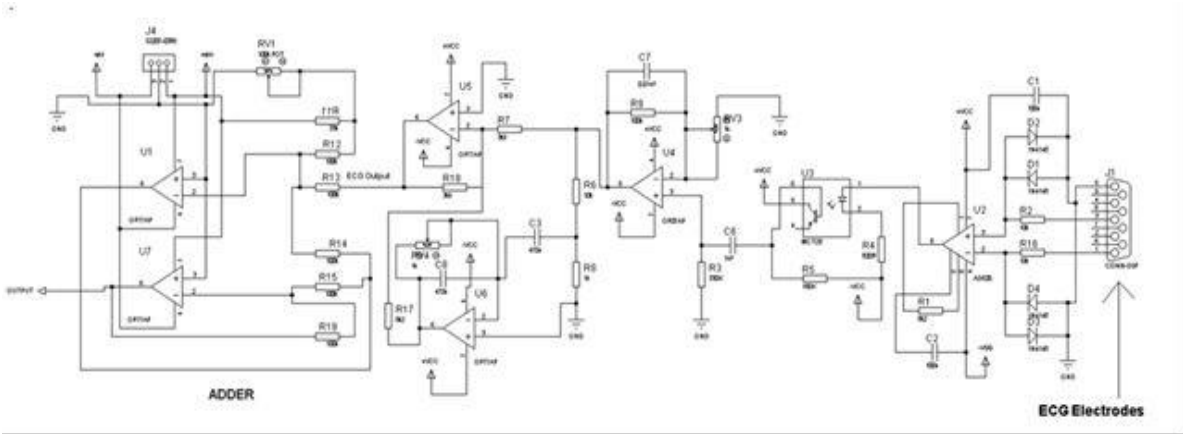

Figure 3.1: Hardware Design of ECG Circuit

A. Waveforms Observed at Each Stage of ECG Module on Digital Storage Oscilloscope

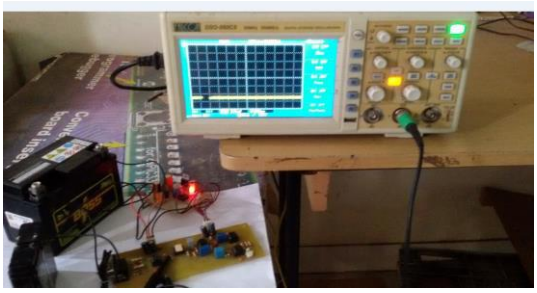

Figure 3.2: Waveform of AD620

Figure 3.3: Waveform of MCT2E

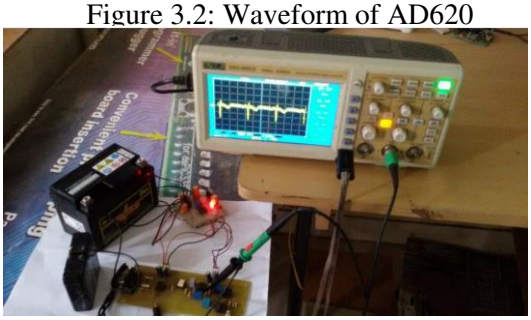

Figure 3.4: Waveform of Non Inverting Amplifier

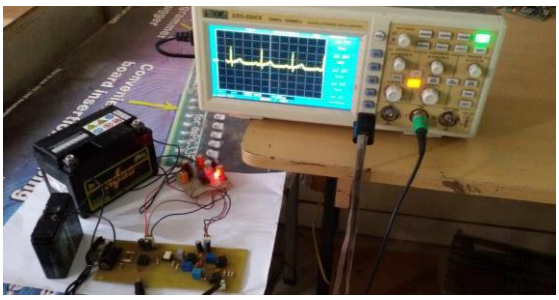

Figure 3.5: Waveform of Notch Inverting Amplifier

Figure 3.6: ECG Waveform at Adder Inverting

4. RESULT:

This wireless device is designed to monitor ECG of a patient, who is far apart. The device analyzes ECG for real time and displays the Heart Rate, and R – R intervals of some critical components. The ECG data is also sent to remote server / terminal using wireless network.

1.Transmitter
2. Receiver

Transmitter

The transmitter will keep on reading the sensor data at fixed interval. If any signal receieved then connection will be established. The electrodes will be connected to the body and going through preamplifier. ECG signals captured by electrodes are processed and filtered by signal conditioning block. Filtered signals are given to the ARM CORTEX M3 LPC 1768 which has an in built ADC for conversion into 12 – bit digital data. SIM900A uses GPRS to transmit the data on remote server. The communication protocol between SIM900A and server is HTTP. We have used HTTP post method for sending ECG data to server or cloud. Because of remote server the communication range is unlimited.

Receiver

The digital signals are captured through GPRS and are stored on the server and displayed on the web browser and all over the world the doctor can access the ECG graph anywhere anytime. GUI is designed for visualizing the ECG data.

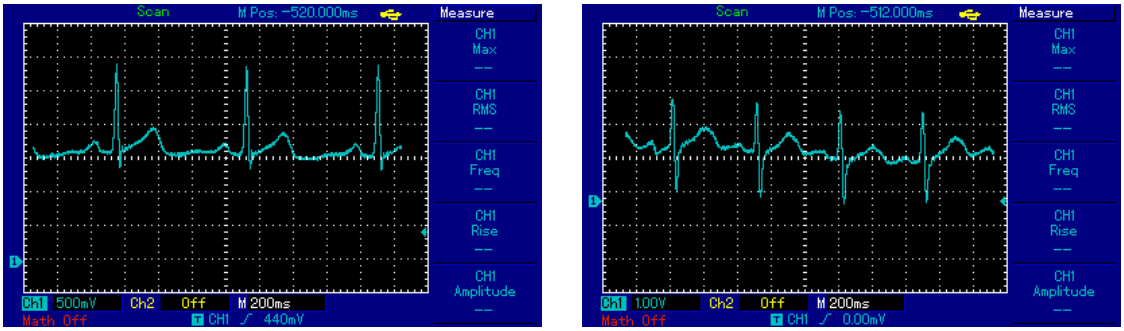

Figure 3.7: Typical ECG waveforms recorded for two different subjects using the ECG monitoring system designed and constructed, the images are displayed through the Digital Storage Oscilloscope

Results

Wireless ECG Monitoring System is successfully designed, constructed and tested on two subjects. The calculated heart rates are 71 and 81 beats per minute. ECG waveforms are observed on Digital Storage Oscilloscope and are comparable with the actual expected waveforms obtained using standard instruments.

5. CONCLUSION:

This paper presented the wireless ECG monitoring system to acquire real – time ECG signal data which is designed and implemented successfully. This system can acquire ECG signals of a patient even from remote place and the signals can be recorded and analyzed at receiver side. This system provides an alternative to the current system, as it reduces cables avoiding problems for patients. The benefits of this remote monitoring system are wide ranging; the patients can continue their normal lives being continuously monitored, also they do not need a PC all the time. The risk of infection is reduced, the hospital over head expense will be significantly less and the data collected/ received can be checked in short time by doctors/ chemical technicians. The system can measure ECG parameters like R-R interval and Heart Rate in real time.

6. FUTURE ENHANCEMENT:

Using the concept and principles the design can be modified for a 12 -lead ECG system for better accuracy and by using Cloud Monitoring System, the real-time data can be shared with physician or research community anywhere anytime.

REFERENCES:

1. Ajithkumar G. Patil (2013)., "Medical Electronics," First Edition. New Delhi.
2. Grasshopper.iics, (2014). "Stage 1-Introduction to the Internet of Things,"
3. Cuno Pfister(2011)., "Getting Started With the Internet of Things," First Edition. United States of America.
4. Thanapong Chaichana, Yutthana Pititeeraphab, Manas Sangworasil, and Takenobu Masuura,(*June 2016*) "Implementation of Wireless Electrocardiogram Monitoring System," *International Journal of Electronics and Electrical Engineering Vol.4, No.3,*

View publication stats