IoT

MDPI

Article

Healthcare Monitoring Using an Internet of Things-Based Cardio System

Galya Georgieva-Tsaneva [1,*], Krasimir Cheshmedzhiev [1], Yoan-Aleksandar Tsanev [2], Miroslav Dechev [1] and Ekaterina Popovska [1]

[1] Institute of Robotics, Bulgarian Academy of Science, 1113 Sofia, Bulgaria; cheshmedzhiev@gmail.com (K.C.); miroslav.dechev@gmail.com (M.D.); ekaterina.popovska@gmail.com (E.P.)
[2] Faculty of Computing and Automation, Technical University of Varna, 9010 Varna, Bulgaria; joan.al2001@gmail.com
* Correspondence: galitsaneva@abv.bg

Abstract: This study describes an IoT-based health monitoring system designed to notify attending physicians when necessary. The developed IoT system incorporates sensors for ECG, PPG, and temperature; a gyroscope/accelerometer; and a microcontroller. A critical analysis of existing components in these areas was conducted to ensure the IoT system's good performance, reliability, and suitability for continuous cardiac monitoring and data processing. This study addresses the challenge of monitoring cardiac activity in patients with arrhythmias, focusing on the differences in heart rate variability (HRV) parameters between healthy individuals and those with extrasystolic arrhythmia. The purpose of this research is to evaluate the effectiveness of IoT-based systems using PPG and ECG sensors for cardiac data registration and HRV analysis. The system leverages time domain and frequency domain methods for HRV analysis to assess the states of the autonomic nervous system. Significant differences were observed in HRV parameters, such as the SDNN, SDANN, RMSSD, and the LF/HF ratio. The results demonstrated that both the PPG and ECG methods provide comparable HRV measurements, despite PPG's higher susceptibility to noise. This study concludes that IoT-based monitoring systems with PPG and ECG integration can reliably detect arrhythmias and offer real-time data for cardiac care.

Keywords: internet of things; health monitoring; wearable devices; sensors; heart rate variability; telemedicine; cardiovascular disease

check for updates

Academic Editor: Amiya Nayak

Received: 29 December 2024
Revised: 27 January 2025
Accepted: 30 January 2025
Published: 6 February 2025

Citation: Georgieva-Tsaneva, G.; Cheshmedzhiev, K.; Tsanev, Y.-A.; Dechev, M.; Popovska, E. Healthcare Monitoring Using an Internet of Things-Based Cardio System. *IoT* **2025**, *6*, 10. https://doi.org/10.3390/iot6010010

Copyright: © 2025 by the authors. Licensee MDPI, Basel, Switzerland. This article is an open access article distributed under the terms and conditions of the Creative Commons Attribution (CC BY) license (https://creativecommons.org/licenses/by/4.0/).

1. Introduction

According to a report by the World Health Organization [1], there has been a growing need for home care for the elderly population in recent years, as this demographic frequently suffers from chronic non-communicable diseases. This poses a significant challenge to healthcare systems, which must develop new approaches to provide adequate healthcare services to an increasingly aging population while ensuring an improved quality of life. Many countries are actively working to increase life expectancy, while the number of patients requiring medical monitoring continues to rise [2]. This necessitates a re-evaluation of healthcare delivery methods. The difficulties elderly individuals face in traveling to and accessing medical facilities highlight the critical need for remote healthcare services. Such services could include preserving and improving health status through disease prevention, treatment, and the rehabilitation of existing conditions.

Modern communication technologies must be leveraged to transmit medical and health information, enabling the provision of clinical services remotely. Beyond the elderly

population, remote healthcare services can also be applied to patients in remote or underserved regions. Telemedicine represents an innovative approach to healthcare, enabling the delivery of medical services at a distance through digital technologies such as the internet, video conferencing, mobile applications, and telemedicine devices. This includes consultations with physicians, remote patient monitoring, diagnosis, and prescribing treatments without requiring physical visits to healthcare facilities.

Remote patient monitoring is facilitated through devices such as wearable sensors that measure vital signs, including blood pressure, heart rate, blood oxygen levels, and temperature. The recorded data are transmitted to medical teams, who respond appropriately when necessary. Telemedicine serves as a means to ensure equitable access to healthcare for all individuals, regardless of their location, age, mobility, or ability to visit a medical facility in person.

Internet of things (IoT) is a technology and approach that employs interconnected devices and sensors to collect, analyze, and exchange data via the internet, aiming to automate and enhance the efficiency of data collection and analysis across various domains of science and life. In the field of telemedicine, IoT enables the integration of smart devices and sensors that gather, analyze, and transmit real-time health data from patients to medical professionals. IoT devices, such as wearable monitors for tracking heart rate, blood pressure, or blood oxygen levels, facilitate remote monitoring and diagnosis. Telemedicine leverages this infrastructure to provide access to quality healthcare services to patients regardless of their location. Connected IoT devices automate data collection, improve diagnostic accuracy, and enable predictive analytics through cloud platforms and artificial intelligence, leading to a more effective management of chronic diseases and emergencies.

The contemporary advancements in technology, internet connectivity, telemedicine, IoT, sensor miniaturization, cloud computing, and the widespread adoption of artificial intelligence pave the way for the development of efficient remote healthcare systems for monitoring, prevention, and treatment. These systems are particularly valuable for applications involving cardiac activity monitoring. Cardiovascular diseases account for one-third of global deaths, with over half a billion people currently suffering from heart-related conditions [3].

Internet of Medical Things (IoMT) is a subset of the broader internet of things (IoT) concept, specifically tailored for healthcare applications. IoMT encompasses connected devices, wearable sensors, mobile applications, and cloud platforms that collect, analyze, and share health-related data [4]. In practice, IoMT is transforming healthcare by improving the efficiency, personalization, and accessibility of medical services [5]. One of its key applications is remote patient monitoring (RPM), where connected devices such as wearable sensors (smartwatches, fitness bands) or medical instruments (glucometers, blood pressure monitors) collect biometric data in real time. These data are transmitted to cloud platforms for analysis and shared with healthcare providers [6]. For instance, a patient with chronic heart failure can wear a device that monitors heart rate and transmits data to a cardiologist overseeing the condition.

This article proposes a model of a healthcare IoT system consisting of biosensors for recording various health parameters and a local device for preprocessing the collected signals and transmitting the data to a cloud-based platform for data analysis and decision-making.

1.1. The Purpose of This Article

The main objectives of this article are as follows:

To present a portable IoT-based sensor system for cardiac monitoring.

To provide a comparative review of the key components that can be used to construct the portable device.

To present an HRV (heart rate variability) analysis of records with extrasystolic arrhythmia using HRV metrics.

Section 1 provides a review of the existing literature regarding the use of the internet of things to create cardio systems. Section 2 describes the developed data recording device for monitoring, a typical healthcare IoT system infrastructure, signal preprocessing methods, and heart rate variability analysis techniques. Section 3 presents the results obtained from this study. Section 4 is dedicated to discussions and interpretations of the findings.

1.2. Related Work

In telecardiology systems, electrocardiography (ECG) remains a primary method for evaluating patients with cardiovascular disorders [7]. The established practice of heart activity monitoring via Holter devices (recording 12 leads) continues to be widely used and effective [8]. However, Holter monitoring has limitations: restricted usage duration (up to 2 days or up to a week with newer Holter models) and patient discomfort due to the attachment method of electrodes to the skin.

Gradually, systems for extended ECG monitoring are being developed [9], such as single-lead ECG patches equipped with self-adhesive dry electrode technology [10]. Technologies for recording and analyzing cardiac activity using mobile phones are also advancing [11], representing a step forward in simplifying the process of ECG monitoring and analysis.

However, the authors of [12] highlight the unreliability of single-lead ECG recordings from smartwatches in detecting more complex cardiac events such as ECG signs of ventricular pre-excitation, Brugada syndrome, long QT syndrome, hypertrophic cardiomyopathy, or arrhythmogenic right ventricular cardiomyopathy. This underscores the limitations of single-lead ECG recordings from smartwatches and indicates the necessity for suitable methods for home-based and long-term ECG monitoring. Researchers hope that developing new miniature ECG sensors will address these challenges.

The authors of [13,14] emphasize the advantages of IoT-based systems for ECG recording, including their ability to transmit data in real time to the attending physician. The authors of [15] suggest using cloud computing to optimize ECG data processing, addressing the challenges posed by the massive volume of data generated by biosensors. The principles of Fog computing [16,17] offer solutions for managing data generated by IoMT devices, enabling information transmission to a Fog node, which reduces system latency and improves data handling efficiency.

The authors of Ref. [18] propose a remote health monitoring system that includes the collection of ECG signals; body temperature measurement; and blood pressure, oxygen saturation, and respiratory rate monitoring. However, this system is limited to monitoring individuals in a lying position.

Ensuring the protection of data transmitted via Wireless Sensor Networks (WSNs) from unauthorized access through effective encryption and authentication is critical, as addressed in [19]. Advances in modern biotechnology have led to the miniaturization of sensors, enabling their integration into body sensor networks (BSNs). An overview of suitable sensors for healthcare monitoring is presented in [20]. An IoT-based system utilizing the MAX30100 sensor for measuring blood oxygen levels and heart rate is described in [21], where neural networks are employed to analyze biomedical data.

A health monitoring system using an ECG sensor and the Arduino platform is detailed in [22], though the authors provide limited information about its design and functionality. Emergency ECG diagnostics may become essential in disaster scenarios [23], where timely

and accurate medical opinions can save lives. In such situations, an established health record with remote access capabilities [24] could prove invaluable.

An IoT-based system combined with neural networks for heart disease risk prediction is presented in [25] to enhance healthcare strategies. The authors of Ref. [26] offer a comprehensive approach to remote patient monitoring; the authors of Ref. [27] provide an in-depth review of IoT-based healthcare systems, concluding that there is a pressing need to develop improved wearable health devices to address the challenges posed by IoT implementations.

This review highlights some research gaps based on the analysis of the literature, which will be discussed in this article:

1. IoT systems predominantly depend on cloud processing, increasing reliance on internet connectivity and potentially causing delays in health data analysis and decision-making during critical situations. Hybrid solutions effectively combining local and cloud processing are notably lacking.
2. Many of the analyzed systems fail to provide detailed descriptions of the sensor elements used in local nodes, limiting researchers' ability to replicate such IoT systems and conduct comparative studies.
3. While numerous online cardiac databases exist, registering and analyzing real new cardiac data under the supervision of a cardiologist remain invaluable.
4. This study offers a comparative analysis of cardiac recordings from healthy individuals and those with extrasystolic arrhythmia (EA), demonstrating the feasibility of using IoT systems for monitoring EA patients.

2. Materials and Methods

2.1. Datasets

The cardio data we processed for the research purposes of this paper were obtained from an online database (http://hrvdata.vtlab.eu/, accessed on 20 December 2024), which was created by the team of authors of this study for the purposes of a scientific project. The registration of biomedical signals was carried out in the morning, with patients and healthy volunteers not consuming alcohol or coffee and not smoking for 8 h before the registration of the signals; they did not eat in the last 2 h before the examination. The subjects studied did not declare any concomitant chronic diseases, were not overweight, did not actively exercise, and did not take antidepressants in the days before the examination. Patient records were pre-anonymized, and no tracing back to the individual is possible. Each record is accompanied by a diagnosis made by a cardiologist. The data registration was conducted in a medical institution in the city of Varna, Bulgaria, under medical supervision. The records were collected from citizens of the city of Varna, all of whom signed a declaration of informed consent. The database thus created was uploaded to the internet so that it can be used by other researchers if desired. For this study, two groups of data records were selected: 24 healthy individuals and 26 patients with extrasystolic arrhythmia. To test the operation of the created device, PPG (photoplethysmographic signal) and ECG records were collected via the participation of one of the authors of this study.

2.2. Data Logging Device

Each IoT-based healthcare system consists of a plurality of sensor nodes, each of which registers vital signs. Each sensor node contains several biomedical sensors that are located on the patient's body or can be implanted in it or located in close proximity. Each sensor node performs the following main tasks:

- The registration of biomedical signals;
- Signal discretization;

- The digital processing of the registered signals (filtering, feature extraction, local buffering, compression);
- The transmission of the processed signals to external devices.

To solve these main tasks, each sensor node must include the following components:

- Physical sensors;
- Signal filtering circuit;
- Analog-to-digital converter;
- Processor unit;
- Local memory;
- Communication unit;
- Power supply (batteries).

An example of a sensor node diagram is shown in Figure 1.

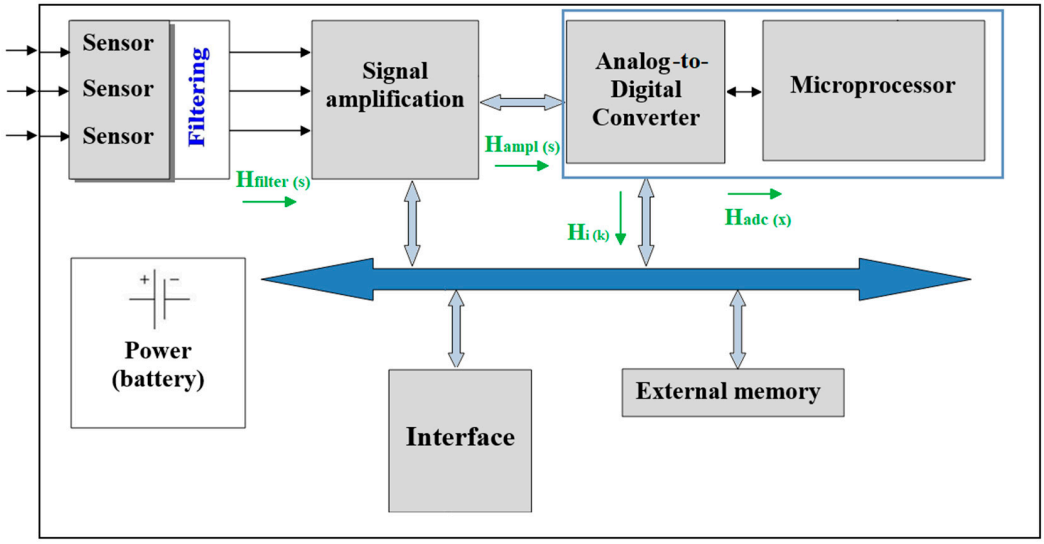

Figure 1. Sensor node diagram.

Functional relationships between sensor units are described by transfer functions with the following general form:

A filter function $H_f(s) = \frac{\omega_c}{s+\omega_c}$, where

s—complex variable in the frequency domain;

ω_c—filter cutoff frequency.

A signal amplification function (increases the amplitude of input signals for effective processing): $H_f(s)$ = K, where K is the gain coefficient.

A digital conversion function (ADC) converts the analog signal to a digital one for processing via the microprocessor. A quantization function may be used in this step:

$H_{adc}(x) = Q(x)$, where $Q(x)$ is the quantization function that converts the continuous signal into a discrete one.

Interface function—the interface serves for communication between the processing elements and external devices. A protocol transfer function can be used: $H_i(k) = \frac{1}{1+\tau k}$, where τ is the time constant (delay or response time) of the interface;

k is the complex variable in the frequency domain.

The specific internal organization of each node depends on the main requirements set for the IoT-based system (functionality, physical dimensions, implementation principles, communication reliability, security of transmitted data, compatibility of operation in the IoT system).

The sensor node aims to register the studied biomedical signals, perform the preprocessing of the registered signals, and deliver them to the next device, where their processing will be continued.

The created sensor module (Figure 2) for the internet of things-based cardiac health monitoring system includes the following:

1. PPG sensor;
2. ECG sensor;
3. Temperature sensor;
4. Accelerometer;
5. Gyroscope;
6. Microcontroller;
7. Battery;
8. USB (Universal Serial Bus) interface;
9. Bluetooth connectivity;
10. Power supply and control scheme;
11. Scheme for charging;
12. EEPROM (Electrically Erasable Programmable Read-Only Memory).

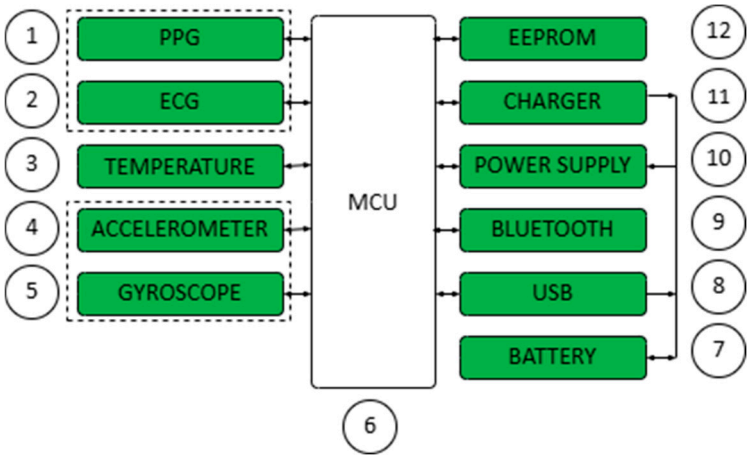

Figure 2. Block diagram of developed sensor module for IoT-based cardiac monitoring system.

The developed mobile sensor experimental device offers a comprehensive solution for monitoring and analyzing the body's vital signs, with a special focus on cardiovascular diseases. By integrating multiple advanced sensors, the system enables the real-time tracking of critical health parameters and ensures improved user safety through smart features.

The device incorporates an ECG sensor for recording cardiac signals, enabling the analysis of HRV to assess autonomic nervous system function (which is responsible for regulating heart activity). Additionally, PPG and SpO_2 (blood oxygen saturation) sensors monitor heart rate, blood oxygen saturation, and blood pressure, providing key insights into cardiovascular and respiratory health.

To enhance health monitoring, the device includes temperature sensors to measure both body temperature and environmental conditions, providing data on the body's response to external temperature changes. An accelerometer and a gyroscope are integrated to detect movement, orientation, and sudden falls, while prolonged inactivity or the loss of consciousness triggers an automatic help signal for emergency assistance. These features ensure continuous safety monitoring, particularly for at-risk individuals.

Data preprocessing is performed directly on the device, with procedures such as noise reduction, artifact removal, and baseline correction using averaging filters, DC (digital converter) component removal, and median and low-pass filters. This ensures

high-quality signal analysis and efficient data processing. A microcontroller supports real-time computation, data storage, and future system scalability.

Wireless connectivity is achieved via a Bluetooth interface, which allows for easy communication with mobile phones, tablets, and personal computers for data visualization and synchronization. A USB interface supports battery charging and data transfer. The device operates on a Li-ION/Li-POL battery managed by an intelligent charge controller, ensuring extended usage and reliability.

The power supply system (Figure 3) consists of several components:

1. USB interface.
2. Smart push-button on/off controller. This takes care of turning the system on and off.
3. The third component is a DC/DC converter, providing the necessary supply voltage for the system.
4. Battery.
5. Charger. An integrated circuit for charging the rechargeable battery contains, in addition to the necessary charging logic, the so-called power management, which allows for the simultaneous charging of the battery and powering of the device itself.

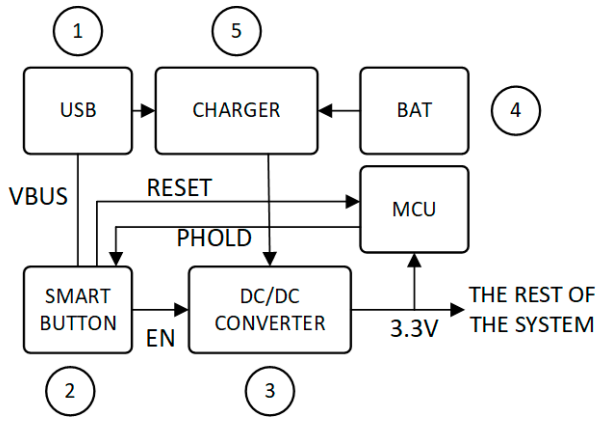

Figure 3. Scheme of power supply system.

By combining real-time data collection, analysis, and emergency signaling in a compact, portable form, the system empowers users to take proactive control of their health.

This IoT-based solution addresses the needs of patients with cardiovascular diseases and individuals prone to stress-related complications, offering continuous monitoring, early risk detection, and improved healthcare outcomes. The device's versatility and scalability make it a valuable tool for personalized health management and a step forward in modern remote health monitoring systems.

Depending on the choice of modules (based on the manufacturer), the PPG sensor and ECG sensor can be integrated into a single module or implemented as separate modules. Similarly, the accelerometer and gyroscope can be combined into one module or designed as separate modules.

2.3. IoT-Based Monitoring System

Figure 4 presents a general view of an IoT-based cardiac monitoring system. The system includes end nodes (body sensor nodes), in which vital signs are registered using biosensors (according to the scheme presented in Figure 2), passed through a microprocessor, and then transmitted via a router to a cloud application for processing and analysis, and the results obtained can be accessed by doctors and users.

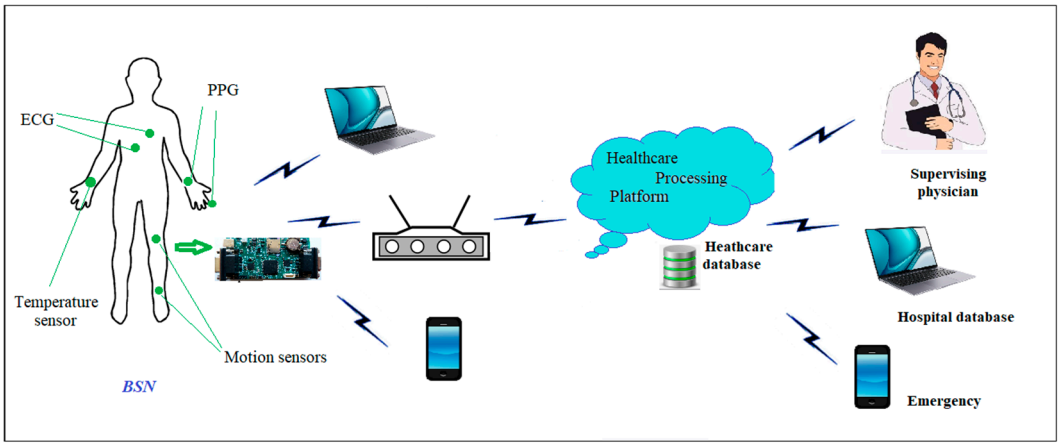

Figure 4. General schema of IoT-based cardio monitoring system.

The end nodes act as a body sensor network (BSN) designed for continuous health monitoring and data management. A BSN consists of multiple patient monitoring end nodes, consisting of the required type and number of sensors for each specific node. The sensors are placed on the patient's body, in a location suitable for registering the specific biomedical signal. These sensors capture various physiological signals, such as heart activity (ECG) and blood oxygen levels and heart rate (PPG), and detect body temperature and movement. The collected data are transmitted to a microcontroller, which acts as a local hub. This hub processes the raw registered sensor data and communicates wirelessly via Bluetooth or Wi-Fi to external devices such as smartphones, laptops (where they can be visualized on a mobile application), or routers.

From the BSN, data are transmitted to a cloud-based healthcare platform, where they undergo further processing, storage, analysis, evaluation, and integration into a comprehensive health database. The cloud platform provides access for medical professionals, enabling the attending physician to remotely monitor the patient's condition and make informed decisions based on real-time data. If any life-threatening events or anomalies are detected, the system can alert emergency services or update hospital databases to facilitate prompt medical intervention.

The platform supports interaction between the patient's BSN, healthcare providers, and emergency responders, ensuring the effective management of critical situations. This system is particularly beneficial for patients with chronic illnesses or those at high risk of cardiac events, offering personalized and proactive healthcare solutions. Through continuous monitoring and efficient communication, the system can improve patient outcomes, reduce hospital visits, and ensure timely feedback to the attending physician.

2.4. Signal Preprocessing and Heart Rate Variability Analysis

Immediately after registration, the raw ECG/PPG signal can undergo filtration (often the sensors themselves that register the signal offer filtration), is amplified (so that its characteristics can be well captured), and is then transmitted to the analog-to-digital converter (ADC), where the signal is converted to a digital one. The received signal still contains noise and artifacts, which is why it undergoes appropriate preprocessing in the microcontroller (MCU).

2.4.1. Signal Preprocessing

ECG Signal

- Noise filtering

The raw ECG signal often contains noise from various sources: muscle artifacts—high frequencies from muscle movements; mains noise (50/60 Hz)—from the electrical network; or base drift—low-frequency noise from breathing or poor electrode contact. For this reason, the first important processing step for the ECG signal is its filtering using different types of filters:

Frequency filters: Band-pass filter—passes frequencies between 0.5 and 40 Hz (in which range the useful ECG signal is located); Notch filter—removes network noise at 50/60 Hz. To filter the input signals in this study, a 4th-order Band-pass Butterworth filter was used, which is suitable for processing ECG signals in real time. This filter was implemented in C++, using a digital signal processing library (DSP Filters Library—an open-source library).

- Signal normalization and centering

The ECG signal is centered around zero to remove permanent offsets (e.g., zero-line drift).

- QRS complex detection

After signal preprocessing, the next important step in signal processing comes—the detection of its main characteristics. The ECG signal contains specific waves: P, QRS, and T. The most important part is the QRS complex, which indicates the time of ventricular depolarization, and its highest amplitude part registers the heart rate.

A number of methods for QRS complex detection are described in the scientific literature, among which the most popular are the following:

- Pan–Tompkins algorithm, which uses differentiation, squaring, and moving average to detect QRS complexes;
- Wavelet transform-based method, which analyzes the signal in different frequency ranges in order to find QRS complexes;
- FFT (Fast Fourier Transform), detecting the maximum deviations in the signal by analyzing the frequency spectrum of the signal.

In this study, a hybrid method was used for QRS complex detection, based on the use of biorthogonal spline wavelet transformation and the zero-crossing method, described in detail in [28].

- Calculation of heart rate (HR)

After the detection of QRS complexes, the RR intervals (the time between two consecutive R peaks) are calculated. The normal NN intervals are also determined, which are obtained from the RR intervals by removing ectopic beats. The heart rate (HR) is calculated using the following formula:

$$HR = \frac{60}{RRinterval}$$

where *HR* is the heart rate, measured in beats per minute (bpm);

RRinterval—RR interval is the time between two consecutive R peaks on the electrocardiogram (ECG), expressed in seconds.

PPG Signal

The PPG sensor illuminates the skin using an LED (light-emitting diode) and measures the reflected light with a photodiode. This process generates a PPG signal containing information about cardiac activity. Noise filtering begins immediately after signal acquisition, as most sensors are equipped with hardware filters to eliminate artifacts caused by ambient light and electronic noise. The data are then transmitted to the microcontroller via I^2C or SP interfaces. If the PPG sensor includes a built-in ADC, it converts and transmits the signal in

digital form, allowing for direct communication with the microcontroller without requiring additional hardware for conversion.

Within the microcontroller, primary signal processing takes place, including the following steps:

- High-Pass Filtering: Removes the DC baseline component, isolating only the pulsatile component of the signal.
- Low-Pass Filtering: Eliminates high-frequency noise (above ~4–5 Hz), preserving the primary frequency information related to cardiac activity.
- Notch Filtering: Removes 50 Hz power line interference, which can contaminate the signal.
- Motion Artifact Reduction: Adaptive filters or accelerometer data (if available) are used to minimize motion-induced artifacts.

Additionally, a 4th-order Band-pass Butterworth filter is applied to ensure a smooth amplitude–frequency response and effectively isolate the desired frequency range (typically 0.5–4 Hz) associated with cardiac activity. The high order of the filter provides steep transitions, helping eliminate low-frequency drift and high-frequency noise without signal distortion.

Signal amplification is performed in software through amplitude scaling. Following this, normalization adjusts the data to a standard range, facilitating subsequent analysis.

Finally, Peak Detection is applied to the PPG signal to identify cardiac pulsations, extracting PP intervals (analogous to RR intervals in ECG signals) for further analysis.

2.4.2. Heart Rate Variability Assessment

HRV analysis is essential for assessing the state of the autonomic nervous system. For the time domain analysis, the following parameters are used:

- MeanRR represents the average length of intervals between cardiac pulsations.
- The SDNN (Standard Deviation of NN intervals, ms) measures the overall variability in heart rhythm by reflecting variations in the intervals between adjacent R-R peaks of the ECG signal (NN intervals) and indicates the balance between the sympathetic and parasympathetic nervous systems.
- The SDANN (Standard Deviation of the Averages of NN intervals, ms) reflects long-term fluctuations in NN intervals by calculating the standard deviation of the mean NN intervals over specific time segments, such as 5 min intervals, over an extended period.
- The RMSSD (Root Mean Square of Successive Differences, ms) quantifies short-term fluctuations in intervals between heartbeats by calculating the root mean square of the differences between successive NN intervals, primarily reflecting parasympathetic activity.
- pNN50 (Percentage of NN intervals differing by more than 50 ms) calculates the percentage of consecutive NN intervals differing by more than 50 milliseconds, serving as a marker of short-term heart rate fluctuations and parasympathetic activity.
- The SDNN Index (Mean of Standard Deviations of NN intervals, ms) calculates the mean of the standard deviations of NN intervals within fixed time segments, such as 5 min intervals, for a long-term ECG recording, reflecting short-term heart rate variations.

For the frequency domain analysis, the signal power is analyzed within specific ranges: Low Frequency (LF, 0.04–0.15 Hz) corresponds to sympathetic activity, High Frequency (HF, 0.15–0.4 Hz) corresponds to parasympathetic activity, and the LF/HF ratio represents the balance between sympathetic and parasympathetic activity.

2.5. Device for Recording Cardio Data and Connecting to IoT System

An analysis of the device parameters, in relation to its various components, is conducted.

In order to create an efficient device for the IoT cardio system, analyses of suitable microcontrollers, sensors for determining heart rate and oxygen saturation, temperature sensors, and motion sensors were performed.

Table 1 presents the characteristics of a similar class of low-power microcontrollers for IoT and related applications, suitable for projects with different requirements for connectivity (Bluetooth, Bluetooth Low Energy (BLE), Wi-Fi, Zigbee), performance, and security. The comparative analysis shows that the STM32U5 is an excellent choice for an energy-efficient and secure IoT system; nRF5340 offers very good integration with BLE for wearable devices and medical IoT solutions; TI CC3235S also offers the possibility of implementation via Wi-Fi and BLE. If the main goal is to achieve low power consumption, a suitable choice is the Microchip SAM L11 or EFR32MG21.

Table 1. Comparative characteristics of Cortex-M33 microcontrollers.

Microcontroller	Core Speed	Flash Memory	RAM	Features	Application
LPC55S69 (manufacturer: NXP Semiconductors, Eindhoven, The Netherlands)	150 MHz	640 KB	320 KB	Dual-core, TrustZone, AES-256 encryption	Secure IoT and real-time systems
nRF5340 (manufacturer: Nordic Semiconductor, Trondheim, Norway)	128/64 MHz	1 MB	512 KB	Bluetooth 5.3, low power, dual core	Medical IoT and wearables
Renesas RA6M3 (manufacturer: Renesas Electronics, Trondheim, Norway)	120 MHz	2 MB	640 KB	TrustZone, Ethernet, USB	Connected secure IoT devices
Microchip SAM L11 (manufacturer: Microchip, Chandler, AZ, USA)	48 MHz	64 KB	16 KB	Ultra-low power, TrustZone	Low-power IoT systems
TI CC3235S (manufacturer: Texas Instruments, Dallas, TX, USA)	80 MHz	1 MB	256 KB	Wi-Fi, BLE, TrustZone, secure boot	IoT with wireless connectivity
EFR32MG21 (Silicon Labs, Oslo, Norway)	80 MHz	1 MB	96 KB	Bluetooth, Zigbee, Thread, low power	Wireless medical IoT devices
STM32U5 (manufacturer: STMicroelectronics, Plan-les-Ouates, Geneva, Switzerland)	160 MHz	Up to 2 MB	786 KB	TrustZone, low power, secure interfaces	Energy-efficient IoT systems

Table 2 presents the main characteristics of PPG/ECG sensors suitable for integration into a sensor node for monitoring health indicators, such as heart rate, oxygen saturation (SpO_2), etc. All of them use I^2C for communication with microcontrollers, which facilitates integration into various systems; they are designed to operate with minimal power consumption, which makes them suitable for battery-powered devices; they have compact dimensions, which is important for wearable and IoT devices; most of them have integrated analog and digital filters, LED drivers, and other components, which reduces the complexity of the developed system. Manufacturers Maxim Integrated (Analog Devices), Texas Instruments, and Silicon Labs are leaders in the development of innovative sensor technologies for IoT and healthcare.

The key differences and advantages of these PPG sensors are as follows: The MAX30102 and MAX30100 are compact and energy-efficient, making them suitable for wearable IoT and simple devices. The MAX86150 combines PPG and ECG, making it ideal for advanced health monitoring applications. The AFE4404 integrates a DSP and low-noise features, ensuring high accuracy for medical applications. The MAX86916 is ultra-compact and features multi-color PPG for more precise monitoring. The Si1144 includes UV index measurement and gesture control, making it particularly suitable for fitness trackers. Conclusion: For compact and energy-efficient applications, the MAX30102 or MAX86916 are suitable; for advanced health monitoring systems with ECG, the MAX86150 is ideal; for

medical and fitness devices, the AFE4404 is suitable; and for fitness trackers with a UV sensor, the Si1144 is the preferred choice.

Table 2. Comparative characteristics of PPG/ECG sensors.

Sensor	Functions	Dimensions (mm)	Power Consumption	Interface	SpO_2 Accuracy	Additional Features	Application
MAX30102 (Maxim Integrated, San Jose, CA, USA)	Pulse, SpO_2 measurement	5.6 × 3.3 × 1.55	600 µA (active), 0.7 µA (sleep)	I^2C	±2%	Built-in ADC, analog and digital filters	Wearable devices, IoT
MAX30100 (Maxim Integrated,) San Jose, CA, USA	Pulse, SpO_2 measurement	5.6 × 3.3 × 1.2	600 µA (active)	I^2C	±2%	Built-in LED driver, photodiode	Portable medical devices
MAX86150 (Maxim Integrated, San Jose, CA, USA)	PPG (Pulse, SpO_2) + ECG	3.5 × 3.5 × 0.88	600 µA (active), 0.5 µA (sleep)	I^2C	±1–2%	Combines ECG and PPG	Health monitoring devices
AFE4404 (Texas Instruments, Dallas, TX, USA)	Pulse, SpO_2 measurement	6.0 × 6.0 × 0.9	1.4 mA (active)	SPI/I^2C	±1–2%	Built-in DSP, LED driver, low noise	Medical and fitness applications
MAX86916 (Maxim Integrated, San Jose, CA, USA)	Pulse, SpO_2, multi-color PPG	2.0 × 2.0 × 0.6	10 µA (low power), 600 µA (active)	I^2C	±2%	Multi-LED for different light sources	Compact wearable devices
Si1144 (Silicon Labs, Austin, TX, USA)	Pulse, SpO_2, UV index	3.0 × 3.0 × 1.2	500 µA (active)	I^2C	±3%	UV sensor, gesture control	Fitness trackers, wearable devices

Table 3 presents the main characteristics of temperature sensors suitable for integration into small portable devices, offering different accuracy and measurement range. Most of them are digital sensors (I^2C or 1-Wire interfaces), with the exception of the TMP36, which is analog. They offer high measurement accuracy (for example, the TMP117 and MAX30205 have an accuracy of ±0.1 °C). The SHT31 also offers humidity measurement, which is an additional function. They have low power consumption, which makes them suitable for battery-powered devices. They are compact and easy to integrate into miniature systems. They can operate in extreme temperature conditions, e.g., from −55 °C to +150 °C for some models such as the TMP117. Most sensors have built-in temperature alarms, programmable settings, and/or noise filters.

Table 3. Comparative characteristics of temperature sensors.

Sensor	Sensor Type	Measurement Range	Accuracy	Power Consumption	Interface	Dimensions (mm)	Additional Features	Applications
TMP117 (Texas Instruments,) Dallas, TX, USA	Digital (I^2C)	−55 °C to 150 °C	±0.1 °C	3.5 µA (active)	I^2C	2.0 × 2.0 × 0.75	Low power, high accuracy	Wearable devices, IoT
LM75A (NXP Semiconductors, Eindhoven, The Netherlands)	Digital (I^2C)	−55 °C to 125 °C	±2 °C	250 µA (active)	I^2C	3.6 × 3.6	Programmable thermostat	IoT, industrial applications
DS18B20 (Maxim Integrated, San Jose, CA, USA)	Digital (1-Wire)	−55 °C to 125 °C	±0.5 °C	1 mA (active)	1-Wire	5.0 × 5.0	Waterproof option	Portable devices, IoT
MCP9808 (Microchip Technology, Chandler, AZ, USA)	Digital (I^2C)	−40 °C to 125 °C	±0.25 °C	200 µA (active)	I^2C	2.0 × 3.0	Programmable alarms	Accurate healthcare and industrial measurements
TMP36 (Analog Devices, Wilmington, MA, USA)	Analog	−40 °C to 125 °C	±2 °C	50 µA (active)	Analog	4.0 × 4.0	Easy to use	Simple sensing nodes
SHT31 (Sensirion, Stäfa, Switzerland)	Temperature + Humidity	−40 °C to 125 °C	±0.3 °C	150 µA (active)	I^2C	2.5 × 2.5	Measures humidity	Wearable devices, environmental applications
MAX30205 (Maxim Integrated, San Jose, CA, USA)	Digital (I^2C)	+0 °C to +50 °C	±0.1 °C	600 µA (active)	I^2C	2.0 × 2.0	Medical grade, high accuracy	Wearable devices, healthcare applications

The conducted studies and comparative characteristics show the following: MAX30205 is a sensor with very high accuracy (±0.1 °C), suitable for measuring body temperature in wearable equipment and healthcare applications; it is distinguished by very low power

consumption. If the measurement range requires wider temperatures, TMP117 or MCP9808 are suitable alternatives with very good measurement accuracy.

Table 4 shows the characteristics of sensors combining an accelerometer and gyroscope, suitable for integration into portable devices. They detect motion and orientation and are used in wearable devices, drones, robotics, virtual reality, and IoT. They are designed for motion tracking, gesture control, and stabilization. Many of them have built-in FIFO buffers for data acquisition. Some, such as the BNO055 and ISM330DHCX, offer built-in algorithms for orientation and data fusion. The LSM6DS3TR-C offers lower power consumption compared to the standard LSM6DS3.

Table 4. Comparative characteristics of motion sensors.

Sensor	Functions	Measurement Range	Accuracy	Power Consumption	Interface	Dimensions (mm)	Additional Features	Applications
ISM330DHCX (STMicroelectronics, Geneva, Switzerland)	3D accelerometer and 3D gyroscope	±2/±4/±8/±16 g, ±125/±250/±500/±1000/±2000/±4000 dps	High precision	0.5 mA (Low Power), 1.1 mA (High Perf)	I^2C/SPI	2.5 × 3.0 × 0.83	Built-in machine learning core, sensor hub	Industrial applications, wearable devices
MPU-6050 (TDK InvenSense, San Jose, CA, USA)	3-axis accelerometer and 3-axis gyroscope	±2/±4/±8/±16 g, ±250/±500/±1000/±2000 dps	Medium precision	3.9 mA (operating mode)	I^2C	4.0 × 4.0 × 1.0	Built-in digital temperature sensor	Smartphones, gaming controllers
LSM6DS3 (STMicroelectronics, Geneva, Switzerland)	3D accelerometer and 3D gyroscope	±2/±4/±8/±16 g, ±125/±245/±500/±1000/±2000 dps	High precision	0.9 mA (High Perf), 1.25 µA (Low Power)	I^2C/SPI	2.5 × 3.0 × 0.83	Built-in FIFO, gesture detection	Wearable devices, sports applications
LSM6DS3TR-C (STMicroelectronics, Geneva, Switzerland)	3D accelerometer and 3D gyroscope	±2/±4/±8/±16 g, ±125/±245/±500/±1000/±2000 dps	High precision	0.55 mA (Low Power), 1.1 mA (High Perf)	I^2C/SPI	2.5 × 3.0 × 0.83	Improved temperature drift, low power	Wearable IoT devices, industrial applications
BMI160 (Bosch Sensortec, Reutlingen, Germany)	3-axis accelerometer and 3-axis gyroscope	±2/±4/±8/±16 g, ±125/±250/±500/±1000/±2000 dps	High precision	925 µA (High Perf), 5 µA (Sleep)	I^2C/SPI	2.5 × 3.0 × 0.8	Built-in FIFO, motion detection	Virtual reality, gaming devices
BNO055 (Bosch Sensortec, Reutlingen, Germany)	9-axis sensor module (accelerometer, gyroscope, magnetometer)	±2/±4/±8/±16 g, ±125/±250/±500/±1000/±2000 dps	High precision	12 mA (High Perf)	I^2C/ SPI/UART	5.2 × 3.8 × 1.1	Built-in fusion algorithm for orientation	Robotics, drones, navigation

The sensors in Table 4 primarily focus on detecting motion and orientation, with each offering unique features suited to specific applications. The ISM330DHCX provides high-precision motion detection with a built-in machine learning core, making it ideal for industrial and wearable applications. The MPU-6050, though less precise, integrates a digital temperature sensor and effectively detects motion in smartphones and gaming controllers. The BMI160 offers reliable motion detection and a built-in FIFO, catering to virtual reality and gaming use cases. The BNO055, as a 9-axis sensor module, detects motion and orientation using a built-in fusion algorithm, making it ideal for robotics and drones. The LSM6DS3TR-C excels in motion detection with improved temperature drift, low power consumption (0.55 mA in low-power mode), and robust accuracy, making it particularly suitable for wearable IoT devices and industrial applications. LSM6DS3TR-C stands out with its combination of precision, energy efficiency, and enhanced performance in dynamic environments.

Based on this research and analysis, appropriate sensors and a microprocessor were selected for the development of a sensor-based IoT healthcare system. The chosen components for the IoT-based system ensure optimal performance, low power consumption, and high precision in data acquisition and processing. The STM32U5 microcontroller is ideal for IoT applications due to its ultra-low power consumption, high computational capabilities, and extensive peripheral support, enabling efficient integration with various sensors. The MAX86150 was chosen for its combination of two cardiac recording technologies (ECG and PPG) and its ability to measure heart rate and SpO_2 with high accuracy, making it suitable for wearable health monitoring applications. Complementing this, the high-accuracy temperature sensor MAX30205 provides precise body temperature measurements with medical-grade accuracy (±0.1 °C) and provides a digital output, enhancing the system's reliability for healthcare applications. The LSM6DS3TR-C was chosen for its robust motion detection capabilities, improved temperature drift, and low power requirements, making it an excellent choice for wearable and dynamic IoT environments. Together, these

components create a versatile, energy-efficient, and precise IoT system, tailored for health monitoring and motion tracking.

The MAX86150, LSM6DS3TR-C, and MAX30205 circuits selected for this implementation cannot directly transmit the recorded data wirelessly, as these sensors do not have built-in wireless communication modules. They are designed to provide data via interfaces such as I^2C or SPI to the microcontroller, in which a module for processing and transmitting the data to cloud structures is implemented.

The selected MAX30205 temperature sensor directly measures body temperature and converts the data into a digital format, providing high accuracy (±0.1 °C). It integrates a thermometer and ADC, eliminating the need for additional analog components for signal amplification and conversion. Through the I^2C interface, the sensor transmits the measurements to the microcontroller for processing. Initially, calibration is performed to ensure accuracy with respect to ambient conditions. The sensor data can be filtered in software to remove environmental noise or electronic interference. The normalization of digital values facilitates compatibility with other modules. Built-in temperature alarm functions allow for automatic notification when a set threshold is exceeded. After processing, the microcontroller can visualize the data or transmit them to a cloud-based analysis system. Its high accuracy and low power consumption make the MAX30205 suitable for medical and wearable devices.

The selected sensor LSM6DS3TR-C records linear acceleration and angular velocity data via an integrated accelerometer and gyroscope, working in sync to accurately measure motion and orientation. The raw data from these sensors are subjected to internal digital filtering to reduce noise and remove unwanted high-frequency components. The data are then transmitted in digital format to the microcontroller via an I^2C or SPI interface. A built-in FIFO buffer ensures efficiency by temporarily storing data, minimizing communication overhead. Parameters such as sampling rate, measurement range, and filtering are software-tunable for the specific application. The microcontroller receives the preprocessed signals and can directly use them for calculations such as motion analysis, gesture detection, or stabilization.

3. Results and Discussion

A sample scenario for a patient vital sign monitoring system with different numbers of devices (50, 100, 200, 1000, 2000, and 10,000 devices) was created (Table 5), and the influence of their number on latency (system response time) was studied. A study was conducted on the influence of the number of devices in an IoT-based health system, examining the latency of the system as the number of nodes increases. Possible solutions for the system architecture were shown.

Table 5. Network latency research.

Number of Devices	Network Load	Latency (ms)	Reasons for Increased Latency
50 devices	Low	100–200 ms	Light load, fast processing, and small data volume.
100 devices	Low to Moderate	200–400 ms	Increased volume of transmitted data.
200 devices	Moderate	400–700 ms	Network and server load begins to grow.
1000 devices	High	700–1500 ms	Greater delays in data processing and transmission.
2000 devices	Very High	1500–2500 ms	Overloading of cloud servers and the network.
10,000 devices	Critically High	2500–5000+ ms	Significant delays: optimization and scaling are required.

When the number of devices in the IoT system increases, latency also rises due to growing network and processing demands. With 50 devices, the load is minimal, resulting in low latency due to light data transmission and fast processing. At 100 to 200 devices, the latency increases moderately as the data volume grows, starting to burden the network and servers. For up to 200 devices, latency remains within acceptable limits

(400–700 ms), with the network and servers capable of handling real-time data processing without significant delays.

With up to 200 devices involved in the system, the use of the classic cloud-based approach is sufficient (all data are transmitted to the cloud; data analysis, machine learning, and storage can be performed entirely in the cloud infrastructure).

At 1000 devices, latency increases to 700–1500 ms, requiring network traffic optimization and more efficient cloud processing. Introducing Edge Computing for preliminary local data processing can help alleviate cloud load and reduce latency. In Edge Computing, some of the processing is conducted locally on devices (e.g., IoT hubs, gateways, or sensors with built-in computing capabilities). This reduces the amount of data sent to the cloud and reduces latency, especially in large systems. The cloud is primarily used for storage and complex analytics, but the main difference is that the preprocessing is conducted close to the data source. When scaling to 2000 devices, latency reaches 1500–2500 ms, potentially delaying critical alerts, which necessitates the use of Load Balancers and the automated horizontal scaling of cloud infrastructure. For systems with 10,000 devices, latency exceeds 2500 ms and can surpass 5000 ms, posing significant performance challenges.

Solutions include deploying Edge Computing, high-speed networks such as 5G or LoRaWAN, and optimizing data transmission intervals. Additionally, partitioning the network into subnetworks with gateways can distribute the load and improve performance. Combining these strategies ensures scalability while maintaining acceptable latency levels. Ultimately, addressing latency effectively requires a multilayered approach involving both infrastructure upgrades and architectural optimizations tailored to device density. This highlights the importance of proactive planning to ensure robust performance in large-scale IoT deployments.

A simulation of an IoT-based healthcare system containing sensor nodes (with different numbers of simulated nodes) for vital health monitoring is performed (via a Python program), including the modeling of data generation, communication, and processing. Each sensor node is represented as an entity that periodically generates data, such as heart rate, SpO_2, motion signal, and temperature, which it sends to a gateway. The gateway collects data from multiple nodes and forwards them to a cloud server for storage and analysis. Using the Python SimPy (3.11.5.) library, time-based events such as data generation, queuing, and processing delay are simulated to mimic real-world operations. Network latency and bandwidth constraints are included to analyze their impact on system performance. By gradually increasing the number of sensor nodes, the simulation evaluates the effects of node density on system latency and throughput. The results are visualized through a graph (Figure 5). This approach provides useful information for optimizing system design for scalable and efficient health monitoring applications.

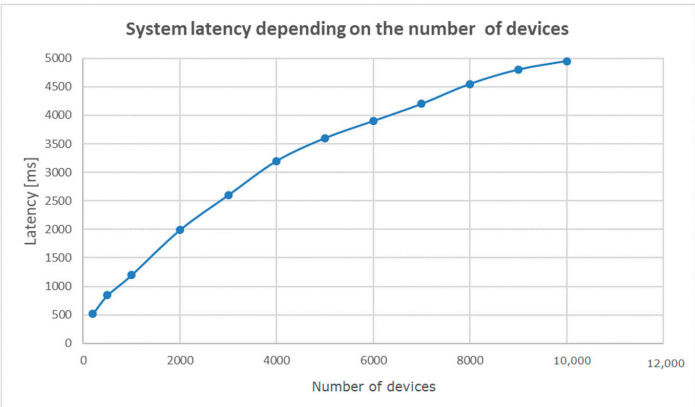

Figure 5. System latency.

3.1. Comparative Analysis Between HR Detected by ECG and PPG

Figure 6A shows the shape of the recorded PPG signal after analog-to-digital conversion. After applying an averaging filter (to remove relatively small short-term disturbances in the signal) and removing the DC component of the signal, the graph shown in Figure 6B is obtained.

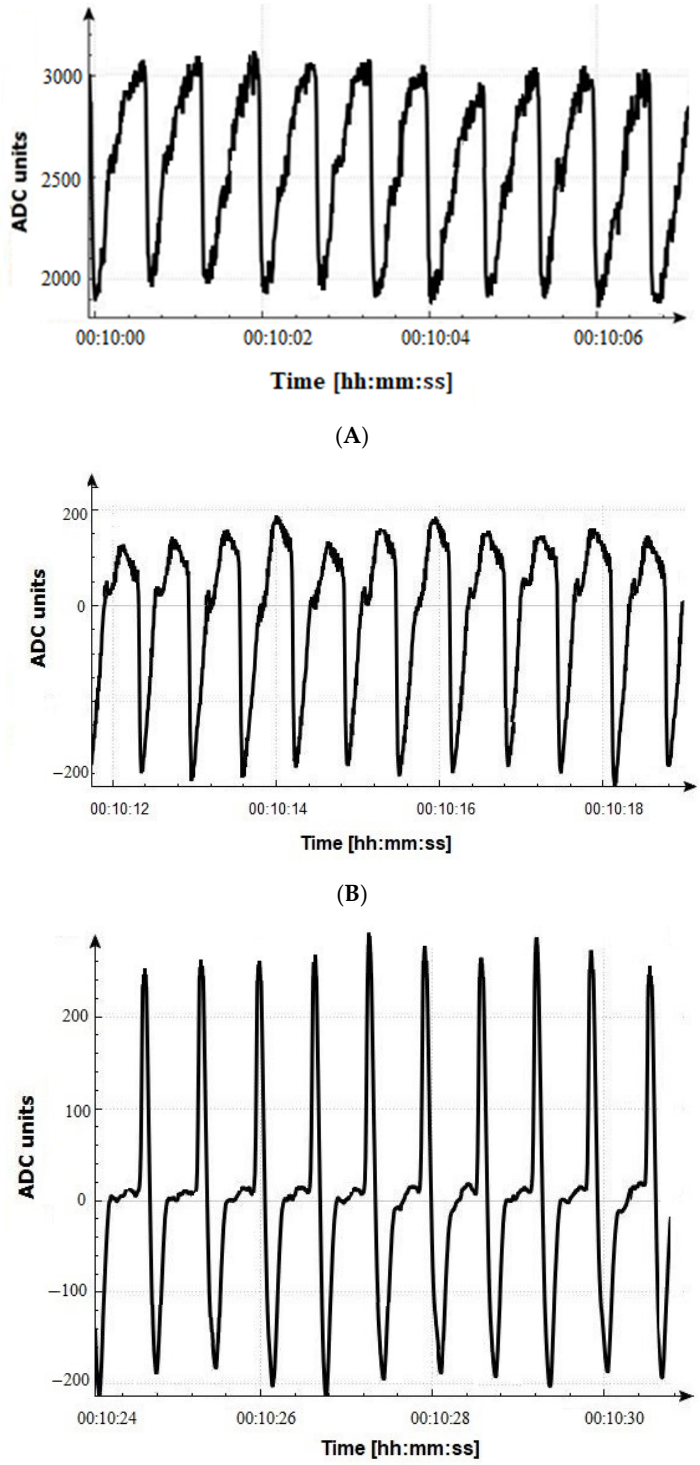

Figure 6. The shape of the PPG signal after the individual stages of noise removal: (**A**) after analog-to-digital conversion; (**B**) after applying an averaging filter and removing DC; (**C**) after applying median and low-pass filters.

A median filter was used to remove large deviations in the input data. The AC (alternating current) frequency component of the PPG signal, associated with pulsations, is usually above 0.5 Hz in healthy individuals. This corresponds to a heart rate of 30 beats per minute or more. The upper limit of the frequency range of the PPG signal is often taken to be around 10 Hz in order to include most of the frequency components associated with cardiac activity [29,30]. For this reason, the removal of high-frequency components (so that they do not affect further processing) from the input signal in this study was performed with a low-pass filter with an upper frequency limit of 10 Hz (Figure 6C).

Figure 7 shows the registered ECG signal after filtration to remove high-frequency noise, baseline drift, and network interference (through low-pass and high-pass filters) and the suppression of muscle and respiratory artifacts (through adaptive filtration and nonlinear filters).

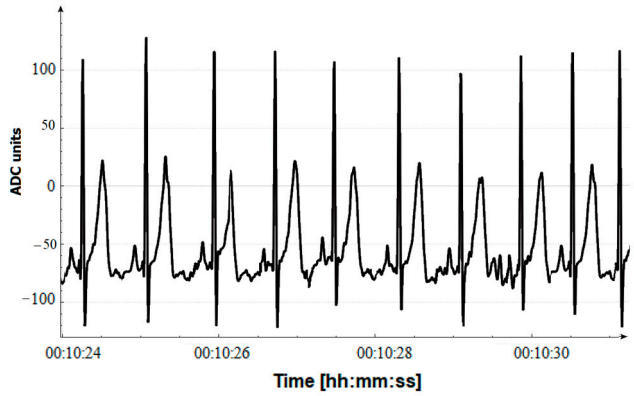

Figure 7. ECG signal after denoising.

A comparison between the two ECG and PPG signals was conducted by determining the maximum deviations in the two signals for a period of 30 min. An assessment was made using relative error.

$$\mathrm{RE} = \frac{|Measured\ Value - True\ Value|}{True\ Value} \cdot 100\% \quad (1)$$

The relative error formula assesses the accuracy of PPG compared to ECG (Table 6), providing a quantitative measure of the difference between the two signals. The PPG signal provides the Measured Value, and the ECG is used as the True Value, which in this case can be considered more accurate, since it provides a direct measurement of the R-R intervals and is less susceptible to noise and artifacts compared to PPG. The registration of the signals was conducted by recording the calm walking of a healthy individual (male, 54 years old), with 12 recordings of 30 min each on different days and at different times of the day. The sampling of the signals was performed at a sampling rate of 1000 Hz.

Table 6. Table of parameters for ECG and PPG for healthy individuals.

Parameters	PPG N = 12 (Mean ± std)	ECG N = 12 (Mean ± std)	RE (%)
Maximum signal deviation (per 30 min record) [number]	2214.32 ± 451.28	2088.17 ± 396.81	6.04%
Mean RR/PP intervals (ms)	818.23 ± 164.09	862.36 ± 256.87	5.12%

The results obtained show a relative error greater than 5% both in determining the average length of intervals when registering with an ECG sensor and PPG method and in determining the number of peaks in the signals.

The results in Table 6 show that PPG has more recorded maximum deviations in the signal (respective intervals). PPG measures the pulse wave, which is the result of the spread of blood in the peripheral vessels. The larger number of intervals is due to additional inaccurately recorded peaks caused by noise in the signal (artifacts of movement, changes in peripheral blood flow, external light). ECG provides a more accurate reflection of the real number of heartbeats and intervals, as it directly follows the activity of the heart (although it can also be contaminated with noise but is generally less sensitive to mechanical movements).

Regardless of the difference in the number of beats determined by the two methods (photogrammetry and electrocardiography), the heart rate variability parameters (time domain—Table 7; frequency domain—Table 8) determined did not show significant differences.

Table 7. Time domain parameters (PPG vs. ECG).

Parameters	PPG N = 12 [Mean ± sd]	ECG N = 12 [Mean ± sd]	p-Value PPG/ECG
SDNN (ms)	126.22 ± 24.09	122.05 ± 38.17	NS [1] (0.76)
SDANN (ms)	124.06 ± 32.23	120.46 ± 39.18	NS (0.79)
RMSSD (ms)	15.96 ± 4.08	14.21 ± 3.06	NS (0.18)
pNN50	8.14 ± 4.86	8.27 ± 3.38	NS (0.94)
SDNN Index (ms)	58.53 ± 24.12	60.12 ± 22.43	NS (0.87)

[1] NS—not significant.

Table 8. Frequency domain parameters (PPG vs. ECG).

Parameters	PPG N = 12 [Mean ± sd]	ECG N = 12 [Mean ± sd]	p-Value PPG/ECG
LF Power [ms^2]	994.34 ± 138.93	1007.13 ± 351.22	NS [1] (0.91)
LF Power nu	0.62 ± 0.14	0.62 ± 0.12	NS (1)
HF Power [ms^2]	614.88 ± 103.02	622.54 ± 101.21	NS (0.86)
HF Power nu	0.38 ± 0.11	0.38 ± 0.09	NS (1)
LF/HF	1.62 ± 0.44	1.62 ± 0.32	NS (1)

[1] NS—not significant.

The comparative analysis of determining the parameters of heart rate variability via the photoplethysmographic method and via the ECG method shows that there are no significant differences in the parameters of heart rate variability. Therefore, both methods can be used equally to determine the state of cardiac activity by means of cardiac interval variability.

3.2. Analysis of HRV

This section presents the results of the analysis of the cardiac recordings of patients diagnosed with extrasystolic arrhythmia. The presented results were obtained with a C# 8.0 software system created by the authors and designed for a local study of HRV parameters.

Arrhythmia in some patients requires constant monitoring, which can be implemented using IoT systems. This is important for patients with a high risk of complications or intermittent (episodic) arrhythmias, which are difficult to detect with traditional methods such as short-term ECG examination. Arrhythmias such as atrial fibrillation or extrasystoles can be detected and tracked by IoT systems, providing continuous monitoring that can detect episodes in real time. Real-time monitoring is especially useful in patients at risk

of serious complications. It is known that arrhythmias can lead to stroke, heart failure, or sudden cardiac death. IoT systems can also help track the effects of treatment.

Statistical analysis. Data are presented as the mean ± standard deviation. *T*-test statistical analysis was used for statistical analysis. At a value of $p < 0.05$, the results for the respective parameters were considered statistically significant. NS (not significant) is written if the value is not significant.

The limitations of the presented study. First, this study included a limited number of patients and healthy individuals (24 healthy individuals and 26 patients with extrasystolic arrhythmia (EA). Second, this study is based only on analysis in the time and frequency domains. This study demonstrates the possibility of monitoring sick patients diagnosed with cardiovascular diseases through an IoT-based sensor system using heart rate variability analysis. The studied ECG records of patients with arrhythmia and healthy subjects have approximately the same age range (48.65 ± 6.12 EA and 46.82 ± 8.44 healthy) and do not have significant gender differences (44.68% EA men and 45.87% healthy men). The obtained results in the time domain are presented in Table 9.

Table 9. Time domain parameters (EA vs. healthy).

Parameters	EA *N* = 26 [Mean ± sd]	Healthy *N* = 24 [Mean ± sd]	*p*-Value EA/Healthy
MeanRR (ms)	827.32 ± 94.14	849.96 ± 68.08	NS [1] (0.35)
SDNN (ms)	178.02 ± 71.42	122.17 ± 56.23	<0.005 (0.0034)
SDANN (ms)	158.21 ± 66.57	118.03 ± 57.81	<0.05 (0.0268)
RMSSD (ms)	26.13 ± 15.19	15.05 ± 11.04	<0.005 (0.0048)
pNN50	18.09 ± 9.11	24.58 ± 13.96	<0.05 (0.0443)
SDNN Index (ms)	54.31 ± 16.18	63.98 ± 18.21	<0.05 (0.0482)

[1] NS—not significant.

The studies performed show that the mean value of MeanRR in healthy individuals is 849.96 ms and is close to the mean value of MeanRR (827.32 ms) obtained for the arrhythmia recordings. The SDNN parameter for the EA group (mean value 178.02 ms) is significantly higher compared to the SDNN calculated for the healthy group (mean value 122.17 ms) and is larger due to the variability introduced by the extrasystoles. The same is observed for the SDANN parameter (158.21 ms in the EA group vs. 118.03 ms in the healthy group). The RMSSD parameter is significantly higher in the EA group compared to the healthy group (26.13 ms vs. 13.96 ms), which can be explained by the irregular differences between adjacent intervals.

Table 9 shows that the determined values for MeanRR are not statistically significant (parameter value $p > 0.05$). For the other studied parameters, SDNN, SDANN, RMSSD, pNN50, and the SDNN Index, the parameter value is $p < 0.05$, which is an indicator of the statistical significance of the studied time parameters. For example, the pNN50 indicator is significantly higher in sick individuals compared to the healthy group (minimum average value 18.09 in EA to average value 24.58 in the control group). This shows that in healthy people with normal sinus rhythm, the total number of intervals with a length of less than 50 ms is smaller, which is due to the fact that usually, the duration of the maximum RR intervals is well over 50 ms.

Table 10 presents the investigated Frequency Analysis Parameters. A statistical analysis was conducted for the significance of the results obtained from the *T*-test, comparing the values of the parameters from the healthy group with those of the group with arrhythmia.

Table 10. Frequency domain parameters (EA vs. healthy).

Parameters	EA $N = 26$ [Mean ± sd]	Healthy $N = 24$ [Mean ± sd]	*p*-Value EA/Healthy
LF Power [ms^2]	576.28 ± 93.41	1059.59 ± 522.36	<0.0001
LF Power nu	0.497 ± 0.06	0.61 ± 0.2	<0.01
HF Power [ms^2]	582.73 ± 91.15	679.51 ± 141.07	<0.001
HF Power nu	0.503 ± 0.07	0.39 ± 0.09	<0.0001
LF/HF	0.99 ± 0.63	1.56 ± 0.71	<0.005

The presented results show statistically significant differences in the values of the studied frequency parameters in the two groups. The frequency parameters of HRV in EA records are significantly reduced compared to the same frequency parameters in healthy records. This may be due to the disruption of the sympathetic and parasympathetic tone, reflected in these frequencies.

The histogram of healthy individuals (Figure 8A) has the form of a normal Gaussian distribution (with its characteristic bell shape). The histogram of the RR intervals is symmetric, with values concentrated around the mean value (in this case, around 0.75 s). Figure 8B shows a histogram of the cardiac intervals of a patient with EA. The distribution of the intervals occurs in a wider range and is asymmetric because the extrasystoles add short intervals (the time between the extrasystole and the normal beat is short) and long intervals (the recovery pause after the extrasystole is longer than normal). Several single high columns (peaks) are observed, corresponding to some of the lengths (for example, around 0.45, 0.8, 0.9, 1.05 s). The histogram has a broad base, which is due to the presence of shorter (caused by premature contractions) and longer intervals (caused by compensatory pauses) than normal.

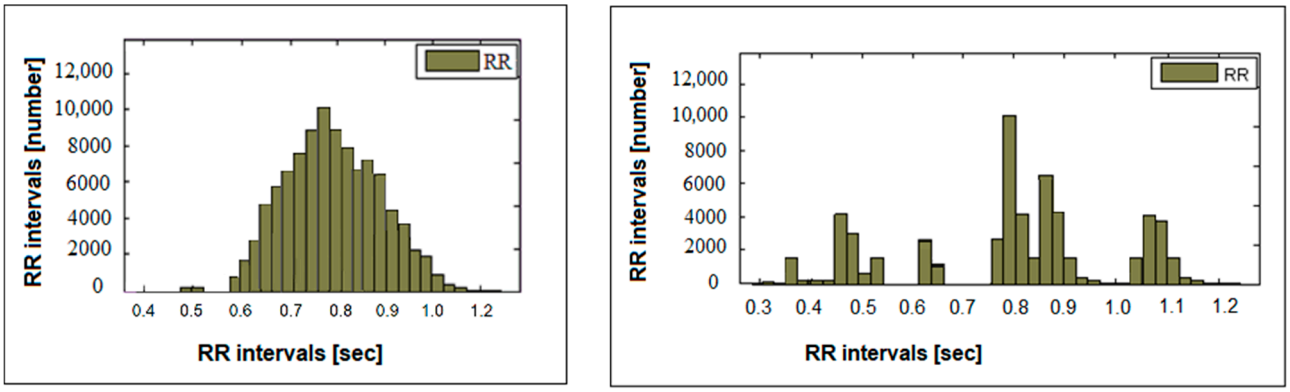

(**A**) (**B**)

Figure 8. Histogram of (**A**) healthy individuals, (**B**) extrasystolic arrhythmia.

An analysis of the results. The conducted statistical analysis reveals statistically significant differences between the two studied groups for the time domain parameters SDNN, SDANN, RMSSD, and pNN50 and for all the frequency domain parameters examined. The parameter MeanRR does not exhibit statistical significance in these studies. Significant differences are also observed in the histograms of the studied groups: normal sinus rhythm and extrasystolic arrhythmia.

In recordings from patients with extrasystolic arrhythmia, the histograms differ markedly from the normal distribution typically observed in healthy individuals. In the histogram of a patient with arrhythmia, clusters around specific interval lengths can be visually identified, along with a lack of intervals across a broad range of lengths. The

numerical values of the analyzed parameters also differ between the studied groups of cardiac recordings and can serve as auxiliary flags for identifying potential health issues. These results may be useful in the clinical practice of cardiologists.

When detecting deviations in HRV and heart rate, there is an option to send notifications to the treating cardiologist or notifications if there is a need to consult a doctor when identifying potentially risky conditions.

The classic approach, in which raw data from IoT devices are transmitted directly to a cloud platform for processing and storage, was selected for the development of our IoT system due to the following advantages:

- Centralized cloud platforms provide the extensive computing resources required for complex analyses, such as machine learning and biosignal processing.
- Cloud platforms facilitate the storage of large volumes of data and enable long-term archiving.
- Integration with software services, such as analytical platforms and electronic health records (EHRs), is straightforward.
- Devices can be simpler and more cost-effective, as they do not perform complex processing locally.
- Energy consumption is reduced because computational tasks are outsourced to the cloud.
- This approach is particularly suitable for applications involving devices with limited resources, such as small wearable sensors.
- Cloud platforms are highly scalable, which is crucial when the number of devices increases.
- Processing raw data in the cloud allows for rapid adaptation to changes in analytical algorithms without the need to update the devices themselves.

For the processing and analysis of data within the cloud platform of the IoT system presented in this study, neural networks (NNs) were utilized. Convolutional Neural Networks (CNNs) were employed to extract local features from time-series data, with 1D-CNNs specifically used for the direct processing of raw PPG and ECG signals. Additionally, Long Short-Term Memory (LSTM) networks were implemented, as they are well suited for identifying long-term dependencies in ECG data. This combination of CNNs and LSTM provides a robust framework for capturing both temporal and frequency patterns in biomedical signals, enabling an accurate and efficient analysis of these complex physiological data. Future work could explore optimizing these architectures to further enhance the system's performance and scalability for real-time health monitoring applications.

4. Discussion

For IoT systems with a small number of devices (up to 200), a classic cloud-based approach is sufficient, as latency remains low, and the network and servers can handle real-time processing without additional optimizations. For systems with a large number of devices (1000 or more), strategies like Edge Computing for local data processing, using Load Balancers, and the horizontal scaling of cloud infrastructure become necessary to reduce latency and ensure smooth operation. In very large-scale deployments (10,000 devices or more), solutions like 5G networks, LoRaWAN, optimized data intervals, and partitioning into subnetworks with gateways are critical for managing the load and maintaining acceptable latency levels.

The following are some limitations of the classic approach (transmitting raw data from IoT devices directly to a cloud platform for processing and storage):

- Transmitting raw data to the cloud requires significant network bandwidth and time, which can be critical for real-time applications.
- A reliable connection to the cloud is essential, which poses challenges in remote or underserved areas.

- Sending raw data increases network traffic and can strain infrastructure.
- Alternative solutions include the following:
- Edge Computing: Part of the processing is performed locally, either in gateways or on individual device nodes. This approach reduces latency and network traffic since only the key epochs of data or analysis results are sent to the cloud instead of all raw data. Additionally, the operation of the device is not entirely dependent on internet connectivity. However, disadvantages include the need for more complex and expensive hardware, as well as the challenges of implementing complex algorithms on devices with limited resources.
- Data Filtering and Compression: Data are filtered or compressed before being transmitted to the cloud. This reduces the volume of transmitted data while retaining essential diagnostic information and decreases reliance on network speed. However, there is a risk of losing details in the raw data, which may limit the quality and accuracy of subsequent analyses.
- Hybrid Model (Edge + Cloud): This approach combines local processing (Edge Computing) with cloud platforms. Critical data can be processed in real time locally, while the cloud handles long-term storage and advanced analyses. This model ensures a balance between responsiveness and comprehensive data management. A downside is the increased complexity of the system, requiring precise synchronization and management between local and cloud components.

When the number of connected IoT devices increases significantly (e.g., to 10,000), system latency may reach levels that are critical for real-time applications. To address this challenge, it becomes necessary to implement both hardware and software optimizations to enhance system performance.

Hardware optimizations can include the following:

- Integrating edge devices (local gateways) to handle part of the data processing locally, reducing network load and latency.
- Implementing LoRaWAN or specialized protocols such as MQTT-SN, which are specifically designed for large-scale IoT networks, thereby increasing throughput and reducing network congestion.

Software optimizations can include the following:

- Data processing optimization by transmitting only key metrics to the cloud rather than the entirety of raw data.
- Data compression techniques to minimize the volume of data being transferred.
- Device count-based recommendations:

Up to 5000 devices: Software optimizations alone may suffice.

In a range of 5000–10,000 devices: A combination of hardware and software improvements is necessary.

For 10,000+ devices: A scalable architecture incorporating Edge Computing and optimized networking solutions is required to ensure the system's performance and responsiveness.

In the HRV analyses of healthy and EA records, a single-peak distribution is observed in the histogram of healthy individuals, concentrated around the normal interval (in this case, around 750 ms). In recordings with EA, a multi-peak distribution and an expanded base of the histogram are observed.

Studies show an increase in the values of most of the time parameters for EA, due to the presence of many short and long intervals that alternate without any sequence and regularity. For this reason, some of the time parameters show increased values compared to those of healthy people.

Despite the increased dispersion in the time parameters, the total HRV (especially in the frequency domains) can be quite reduced, which indicates impaired autonomic control over the heart rhythm.

Sensor-based IoT-based cardiac monitoring systems provide precision and convenience for continuous monitoring. When investigating and identifying extrasystoles, ECG modules are more reliable, but integration with PPG and other physiological sensors can provide additional context for their occurrence and frequency. This makes IoT-based systems a valuable tool for the diagnosis, prevention, and management of cardiovascular diseases, including EA.

As part of the future development of the system, the authors will consider alternative options that may include the following:

1. Sensors with built-in Bluetooth or Bluetooth Low Energy (BLE) functionality:
   - TI CC2650 SensorTag—a multi-component sensor with BLE communication (includes an accelerometer, temperature sensor, etc.).
   - Silicon Labs Si117x: Low-power PPG sensor and BLE module.

These sensors eliminate the need for a central data transmission module, reduce integration complexity, and lead to lower power consumption in systems with infrequent transmissions.

2. LoRaWAN sensors (ideal for IoT applications in remote areas):
   - Nanosense LoRaWAN Sensors: Motion, temperature, and biometric sensors.
   - RAKWireless WisBlock: Modular LoRaWAN sensors for various applications.
3. Combined sensor modules:
   - Bosch BHI260AP: Combines an accelerometer, a gyroscope, and motion analysis algorithms.
   - Maxim Integrated MAX32664: Can work with multiple sensors simultaneously, providing combined data from PPG and ECG measurements, and offers an integrated BLE module.

At this stage, power consumption is optimized to allow for 2–3 days of operation without charging. As for future work, the authors will consider implementing dynamic power management techniques that adapt power usage based on the device's current needs. Key strategies include introducing low-power modes, where sensors enter a sleep state when not actively measuring or transmitting data, and adaptive switching on/off sensors and communication modules based on events or predefined schedules to reduce unnecessary power consumption. Trigger-based transmission, where data are sent only during significant measurement changes, and lowering the measurement frequency under stable conditions are effective methods for conserving energy. Utilizing energy-efficient data transmission protocols, such as BLE or LoRaWAN, further minimizes power usage. Incorporating energy-efficient components, such as microcontrollers with dynamic voltage and frequency scaling (DVFS), and caching data locally to batch transmissions also enhance efficiency. Finally, the integration of intelligent power management algorithms to optimize sensor performance in real time ensures longer battery life, which is critical for autonomous IoT systems. These combined approaches will significantly extend operational autonomy.

In future versions of the system, the authors are considering integrating machine learning algorithms such as regression analysis, deep neural networks, and classification algorithms. These approaches could be applied to predict the risk of arrhythmias, hypertension, or other cardiovascular diseases based on historical and current biometric data.

As for future work, the authors plan to introduce additional capabilities into the system, including interactivity and predictive analytics. To achieve these enhancements,

several approaches can be applied: integrating additional modules, such as a display or feedback interface, to provide patients with real-time information about their condition; implementing machine learning algorithms to analyze collected data in real time and predict potential risks; and carefully balancing the need for high accuracy with the expansion of the system's functional potential to support interactivity and predictive diagnostics. These improvements aim to make the system more user-friendly, responsive, and effective in proactively managing patient health.

The developed IoT-based system comprises sensors for data collection, including the integrated MAX86150 sensor for PPG and ECG registration, a SpO_2 sensor, a body temperature sensor, a gyroscope/accelerometer, the STM32U5 microcontroller, Bluetooth connectivity, and a cloud platform for storage and analysis. The exact names of the sensors used are listed, which can be beneficial for researchers aiming to replicate or utilize a similar IoT system. Similar systems (Table 11) created in the last 3–4 years, due to the rapid advancements in IoT technologies, with specified sensor names, are described in [31,32]. In contrast, references [25,33–35] present IoT-based systems without specifying sensor names, making it challenging to replicate these systems for scientific purposes.

Table 11. Comparison of IoT systems according to their main characteristics.

Ref.	Sensors	MCU	Processing	Processing Algorithms	NN	Advantages	Disadvantages
[31]	AD8232 (ECG), sensors for SpO_2 and temperature	ESP32	Local processing via MCU (ESP32)	Classical signal processing algorithms	No	Continuous monitoring, local processing	Dependency on internet connection, security risks, limited scalability, lack of NN
[32]	Measures pulse, SpO_2, temperature, ECG	-	Cloud processing	Recurrent Neural Networks (RNNs), Long Short-Term Memory (LSTM) neural network	Yes	Timely analysis, useful during pandemics	Dependency on internet connection, delays in processing, no specific sensor details
[25]	Blood pressure (BP), SpO_2, ECG	-	Cloud processing	Bi-LSTM	Yes	High prediction accuracy, effective use of Bi-LSTM	Lack of specific system description
[33]	Max30105 (pulse and SpO_2), Max30205 (temperature), MPS20N0040D (blood pressure)	ESP32	Local processing	Multilayer Perceptron (MLP) Neural Network	Yes	Health evaluation based on 8 parameters	Lack of detailed analysis of the studied parameters
[34]	ECG sensors (unspecified), based on the SensorTile platform	STM32L476JG	Local processing (ECG)	Convolutional Neural Network (CNN), optimized for local processing	Yes	Local processing, optimized energy efficiency, accuracy above 97%	Limited details about sensors, focus only on ECG
[35]	Unspecified sensors measuring ECG and other vital signs	-	Cloud processing	K-Nearest Neighbor (KNN), Support Vector Classifier (SVC), Random Forest (RF)	Yes	High accuracy (92.28% for heart attack detection, 97.5% for ECG classification)	Dependency on internet connection, latency, complex integration

The IoT system presented in this article employs a hybrid data processing method, where part of the raw data processing is performed in local nodes, while the remaining processing, including data analysis and storage, occurs on a cloud platform. The advantages of this method include rapid responses to critical health events, essential for medical systems; primary processing at the local level reduces the data volume (filtering, noise removal, compression) before transmission to the cloud, thereby saving cloud computational resources and lowering storage and analysis costs. IoT systems in [25,31,34] offer only local processing, which limits their ability to perform complex analyses and predictions, as local devices typically have limited computational resources. Sole reliance on cloud processing, as in [25,32,35], can lead to delays in critical situations and depends on a stable internet connection, which may be problematic in remote areas where connectivity is unreliable or intermittent.

The cloud platform in the presented IoT system utilizes neural networks for data processing and analysis: CNNs are used for extracting local features from time-series data, employing 1D-CNNs for the direct processing of raw PPG and ECG signals, and LSTM

(Long Short-Term Memory) networks are employed for identifying long-term dependencies in ECG data. A comparison of IoT systems using neural networks in the referenced literature shows the use of Recurrent Neural Networks (RNNs) [32], Bi-LSTM [25], multilayer perceptron neural networks [33] optimized for local operations, and CNNs [34]. Classical machine learning algorithms were applied in [35].

Based on the conducted critical analysis, the following directions for IoT systems' development in the next 2–3 years can be identified: leveraging advanced AI models, such as DNNs, for risk prediction and the early detection of cardiac diseases; creating increasingly smaller, lighter, and wearable IoT sensors; enhancing network connectivity; adopting hybrid processing systems; and developing energy-efficient microcontrollers.

5. Conclusions

This study analyzed HRV parameters from ECG and PPG signals in healthy individuals and patients with extrasystolic arrhythmia, revealing significant differences. The SDNN was significantly higher in EA (178.02 ms) than in healthy controls (217.56 ms, $p < 0.005$), reflecting increased variability due to extrasystoles. The RMSSD in EA (26.13 ms) was also significantly higher than in healthy individuals (15.05 ms, $p < 0.005$). In the frequency domain, LF power was 576.28 ms^2 for EA versus 1059.59 ms^2 for healthy controls ($p < 0.0001$), while HF power was 582.73 ms^2 for EA versus 679.51 ms^2 for healthy controls ($p < 0.001$). The LF/HF ratio was reduced in EA (0.99) compared to healthy individuals (1.56, $p < 0.005$), indicating disrupted autonomic balance. The number of peaks of the signals localized by PPG (2214.32 $\pm$ 451.28) has more signal deviations compared to the number of ECG peaks (2088.17 $\pm$ 396.81) with a 6.04% relative error, but HRV parameters derived from both methods showed no significant differences. The histograms of RR intervals for EA showed a broad, asymmetric distribution compared to the Gaussian shape in healthy individuals. These results demonstrate the reliability of IoT systems for detecting arrhythmias and the potential of PPG and ECG for continuous monitoring in cardiac care.

IoT-based systems enable the timely detection of potentially dangerous cardiac episodes and provide an opportunity for rapid response by medical professionals. These systems facilitate effective therapy monitoring, as the recorded data are analyzed and transmitted in real time to the physician, allowing for adjustments to the treatment plan. Through the integration of advanced sensors, cloud platforms, and machine learning algorithms, IoT systems offer the continuous monitoring of vital signs such as heart rate, blood pressure, oxygen saturation, and ECG signals, which are critical for managing chronic conditions and identifying acute events.

The ability to process and analyze data locally, combined with cloud-based storage and advanced analytics, ensures that large volumes of data are efficiently managed and readily available for medical decision-making. IoT systems also support long-term monitoring, providing insights into heart rate variability and other key parameters, which can indicate autonomic nervous system balance and early warning signs of life-threatening arrhythmias.

Author Contributions: Conceptualization and methodology, G.G.-T.; software and validation, G.G.-T. and K.C.; formal analysis and investigation, G.G.-T.; resources and data curation, K.C.; writing—original draft preparation, G.G.-T., Y.-A.T., M.D., and E.P.; writing—review and editing, G.G.-T.; project administration, K.C. All authors have read and agreed to the published version of the manuscript.

Funding: This research was funded by the National Science Fund of Bulgaria (scientific project "Modeling and creation of a sensor system for research and analysis of the body's health"), Grant Number KP-06-M67/5, 13 December 2022.

Institutional Review Board Statement: The study was conducted in accordance with the Declaration of Helsinki, and approved by the Research Ethics Committee at the Medical University of Varna, Bulgaria, Protocol/Decision No 82, 28 March 2019.

Informed Consent Statement: Informed consent was obtained from all subjects involved in the study.

Data Availability Statement: http://hrvdata.vtlab.eu/ (accessed on 20 December 2024).

Conflicts of Interest: The authors declare no conflicts of interest.

References

1. World Health Organization. *Regional Office for the Eastern Mediterranean. The Growing Need for Home Health Care for the Elderly: Home Health Care for the Elderly as an Integral Part of Primary Health Care Services*; World Health Organization: Geneva, Switzerland, 2015. Available online: https://iris.who.int/handle/10665/326801 (accessed on 20 December 2024).
2. Rassam, M.A. Autoencoder-Based Neural Network Model for Anomaly Detection in Wireless Body Area Networks. *IoT* **2024**, *5*, 852–870. [CrossRef]
3. Iqbal, S.M.A.; Leavitt, M.A.; Mahgoub, I.; Asghar, W. A Wearable Internet of Things Device for Noninvasive Remote Monitoring of Vital Signs Related to Heart Failure. *IoT* **2024**, *5*, 155–167. [CrossRef]
4. Khatib, A.I.; Shamayleh, A.; Ndiaye, M. Healthcare and the Internet of Medical Things: Applications, Trends, Key Challenges, and Proposed Resolutions. *Informatics* **2024**, *11*, 47. [CrossRef]
5. Bolam, S.M.; Batinica, B.; Yeung, T.C.; Weaver, S.; Cantamessa, A.; Vanderboor, T.C.; Yeung, S.; Munro, J.T.; Fernandez, J.W.; Besier, T.F.; et al. Remote Patient Monitoring with Wearable Sensors Following Knee Arthroplasty. *Sensors* **2021**, *21*, 5143. [CrossRef]
6. Li, C.; Wang, J.; Wang, S.; Zhang, Y. A review of IoT applications in healthcare. *Neurocomputing* **2024**, *565*, 127017. [CrossRef]
7. Molinari, G.; Molinari, M.; Di Biase, M.; Brunetti, N.D. Telecardiology and its settings of application: An update. *J. Telemed. Telecare* **2018**, *24*, 373–381. [CrossRef]
8. Steinberg, C.; Philippon, F.; Sanchez, M.; Fortier-Poisson, P.; O'Hara, G.; Molin, F.; Sarrazin, J.F.; Nault, I.; Blier, L.; Roy, K.; et al. A Novel Wearable Device for Continuous Ambulatory ECG Recording: Proof of Concept and Assessment of Signal Quality. *Biosensors* **2019**, *9*, 17. [CrossRef]
9. Xu, X.; Liu, Z.; He, P.; Yang, J. Screen printed silver nanowire and graphene oxide hybrid transparent electrodes for long-term electrocardiography monitoring. *J. Phys. Appl. Phys.* **2019**, *52*, 455401. [CrossRef]
10. Jurado, I.C.; Lorato, I.; Morales, J.; Fruytier, L.; Stuart, S.; Panditha, P.; Janssen, D.M.; Rossetti, N.; Uzunbajakava, N.; Serban, I.B.; et al. Signal Quality Analysis for Long-Term ECG Monitoring Using a Health Patch in Cardiac Patients. *Sensors* **2023**, *23*, 2130. [CrossRef] [PubMed]
11. Mahmud, M.S.; Wang, H.; Esfar-E-Alam, A.M.; Fang, H. A Wireless Health Moni-toring System Using Mobile Phone Accessories. *IEEE Internet Things J.* **2017**, *4*, 2009–2018. [CrossRef]
12. Tooley, J.E.; Turakhia, M.P. Is it time for a consumerized or home-based 12-lead electrocardiogram? *EP Eur.* **2022**, *24*, 357–358. [CrossRef]
13. Wan, J.; Al-awlaqi, M.A.; Li, M.; O'Grady, M.; Gu, X.; Wang, J.; Cao, N. Wearable IoT enabled real-time health monitoring system. *Eurasip J. Wirel. Commun. Netw.* **2018**, *2018*, 298. [CrossRef]
14. Li, C.; Hu, X.; Zhang, L. The IoT-based heart disease monitoring system for pervasive healthcare service. *Procedia Comput. Sci.* **2017**, *112*, 2328–2334. [CrossRef]
15. Qaisar, S.M.; Subasi, A. Cloud-based ECG monitoring using event-driven ECG acquisition and machine learning techniques. *Phys. Eng. Sci. Med.* **2020**, *43*, 623–634. [CrossRef] [PubMed]
16. Awaisi, K.S.; Hussain, S.; Ahmed, M.; Khan, A.A.; Ahmed, G. Leveraging IoT and Fog Computing in Healthcare Systems. *IEEE Internet Things Mag.* **2020**, *3*, 52–56. [CrossRef]
17. Rincon, J.A.; Guerra-Ojeda, S.; Carrascosa, C.; Julian, V. An IoT and Fog Compu-ting-Based Monitoring System for Cardiovascular Patients with Automatic ECG Classifi-cation Using Deep Neural Networks. *Sensors* **2020**, *20*, 7353. [CrossRef] [PubMed]
18. Swain, K.; Cherukuri, M.; Mishra, S.K.; Appasani, B.; Patnaik, S.; Bizon, N. LI-Care: A LabVIEW and IoT Based eHealth Monitoring System. *Electronics* **2021**, *10*, 3137. [CrossRef]
19. Jabeen, T.; Jabeen, I.; Ashraf, H.; Jhanjhi, N.Z.; Yassine, A.; Hossain, M.S. An Intelligent Healthcare System Using IoT in Wireless Sensor Network. *Sensors* **2023**, *23*, 5055. [CrossRef]
20. Uddin, R.; Koo, I. Real-Time Remote Patient Monitoring: A Review of Biosensors Integrated with Multi-Hop IoT Systems via Cloud Connectivity. *Appl. Sci.* **2024**, *14*, 1876. [CrossRef]
21. Islam, M.R.; Kabir, M.M.; Mridha, M.F.; Alfarhood, S.; Safran, M.; Che, D. Deep Learning-Based IoT System for Remote Monitoring and Early Detection of Health Issues in Real-Time. *Sensors* **2023**, *23*, 5204. [CrossRef] [PubMed]

22. Vasam, V.K.; Shaik, A.; Tolchuri, S.L.M.; Rachamadugu, S.S.; Krishna, H.; Chan-dra, G.R.; Anand, D. Patient Health Monitoring System Using IOT And AI. *Eng. Proc.* **2024**, *66*, 31. [CrossRef]
23. Ivanova, V.; Boneva, A.; Vasilev, P.; Ivanov, S.; Lekova, S. Augmented Reality based Training of Surgical Staff to Operate a Laparoscopic Instrument. In Proceedings of the Big Data, Knowledge and Control Systems Engineering (BdKCSE), Sofia, Bulgaria, 28–29 October 2021; pp. 1–7. [CrossRef]
24. Boneva, A.; Ivanova, V.; Vasilev, P.; Ivanov, S.; Ivanova, T. Big Data Processing for Bulgarian Healthcare—Smart Cards and Some Simulating Decisions. In Proceedings of the 2023 International Conference on Big Data, Knowledge and Control Systems Engineering (BdKCSE), Sofia, Bulgaria, 2–3 November 2023; pp. 1–8. [CrossRef]
25. Nancy, A.A.; Ravindran, D.; Raj Vincent, P.M.D.; Srinivasan, K.; Gutierrez Reina, D. IoT-Cloud-Based Smart Healthcare Monitoring System for Heart Disease Prediction via Deep Learning. *Electronics* **2022**, *11*, 2292. [CrossRef]
26. Waleed, M.; Kamal, T.; Um, T.-W.; Hafeez, A.; Habib, B.; Skouby, K.E. Unlocking Insights in IoT-Based Patient Monitoring: Methods for Encompassing Large-Data Challenges. *Sensors* **2023**, *23*, 6760. [CrossRef] [PubMed]
27. Abdulmalek, S.; Nasir, A.; Jabbar, W.A.; Almuhaya, M.A.M.; Bairagi, A.K.; Khan, M.A.-M.; Kee, S.-H. IoT-Based Healthcare-Monitoring System towards Improving Quality of Life: A Review. *Healthcare* **2022**, *10*, 1993. [CrossRef] [PubMed]
28. Georgieva-Tsaneva, G. Wavelet Based method for Non-Stationary Time Series Processing. In Proceedings of the 21st International Conference on Computer Systems and Technologies, Ruse, Bulgaria, 19–20 June 2020; pp. 122–128.
29. Liu, S.-H.; Li, R.-X.; Wang, J.-J.; Chen, W.; Su, C.-H. Classification of Photoplethysmographic Signal Quality with Deep Convolution Neural Networks for Accurate Measurement of Cardiac Stroke Volume. *Appl. Sci.* **2020**, *10*, 4612. [CrossRef]
30. Liu, S.-H.; Wang, J.-J.; Chen, W.; Pan, K.-L.; Su, C.-H. Classification of Photoplethysmographic Signal Quality with Fuzzy Neural Network for Improvement of Stroke Volume Measurement. *Appl. Sci.* **2020**, *10*, 1476. [CrossRef]
31. Heaney, J.; Buick, J.; Hadi, M.U.; Soin, N. Internet of Things-Based ECG and Vitals Healthcare Monitoring System. *Micromachines* **2022**, *13*, 2153. [CrossRef]
32. Chen, Q.; Sheng, N. A novel health monitoring system for vital signs using IoT. *Sci. Rep.* **2024**, *14*, 19189. [CrossRef] [PubMed]
33. Dami, S. Internet of things-based health monitoring system for early detection of cardiovascular events during COVID-19 pandemic. *World J. Clin. Cases* **2022**, *10*, 9207–9218. [CrossRef] [PubMed] [PubMed Central]
34. Scrugli, M.A.; Loi, D.; Raffo, L.; Meloni, P. An Adaptive Cognitive Sensor Node for ECG Monitoring in the Internet of Medical Things. *arXiv* **2021**, arXiv:2106.06498v2. [CrossRef]
35. Alnaggar, M.; Handosa, M.; Medhat, T.; Rashad, M.Z. An IoT-based Framework for Detecting Heart Conditions using Machine Learning. *Int. J. Adv. Comput. Sci. Appl. (IJACSA)* **2023**, *14*. [CrossRef]

Disclaimer/Publisher's Note: The statements, opinions and data contained in all publications are solely those of the individual author(s) and contributor(s) and not of MDPI and/or the editor(s). MDPI and/or the editor(s) disclaim responsibility for any injury to people or property resulting from any ideas, methods, instructions or products referred to in the content.