Proceedings of the Fourth International Conference on Communication and Electronics Systems (ICCES 2019)
IEEE Conference Record # 45898; IEEE Xplore ISBN: 978-1-7281-1261-9

ECG MONITORING SYSTEM USING AD8232 SENSOR

Anitha S Prasad
Assistant Professor, Electronics and Communication,
Sri Jayachamarajendra College of Engineering,
Mysuru, India
anith.sp@sjce.ac.in

Kavanashree N
PG Student, Electronics and Communication,
Sri Jayachamarajendra College of Engineering,
Mysuru, India.
kavanashree5467@gmail.com

Abstract- In this study, we describe the design and successful implementation of the smart healthcare monitoring device. This design helps to view the Electrocardiogram signal and heart beat count can measure at very low cost. The real time ECG signal is viewed on laptops and transmitted to mobile phone through Bluetooth with the help of android software. AD8232 is Electrocardiogram sensor which amplifies the signal extracted with the help of ECG electrode. This design helps in monitoring ECG of patients in remote area.

Keywords- Electrodes; AD8232 Sensor; Arduino controller; Bluetooth module.

I. INTRODUCTION

Medical expert systems are increasing day by day where one part is transferrable and smart healthcare nursing devices which can be used in everyday life. Medical applications have greater importance in this fast moving and competitive world. Any change in heart rate or rhythm, or variation in the morphological ECG signal pattern, is a symptom of an arrhythmia, which could be identified by the analysis of stored data of ECG [1].

ECG monitoring system plays an important role in determining cardiac diseases. There are number researchers working on to archive long term ECG monitoring system. Various types of ECG measuring systems have been introduced. The ECG monitoring system that are used currently in hospitals are big and heavy so it is less portable and also the measuring system have 12 electrodes where 2 on anklet 2 on wrist and other electrodes upon chest of the body. These electrodes are gel electrodes which causes allergy and infection in case of regular use so it is difficult to do long term measurement. These devices are very expensive and home monitoring is not possible so the aged people who need to be tested their heart rate frequently is very difficult in this high population, and it is a main problem in hospitals to check the ECG of all the patients. To provide home monitoring system smart technology place an important role where the result of ECG data collected is analyzed and shared with doctor and the family members.

There are various applications which provide multiple health related data such as ECG, finger photoplethysmography, and blood pressure plethysmography [2]. There are several signal amplification filter methods used in order to get the proper waveform. The delayed signal error is normalized using LMS in order to achieve high speed and low latency and SVM classifier method is used to remove noise [3]. The analysis of signal depends on the P, Q, R and S point in the ECG signal waveform the detection of these point has various algorithm and these points are implemented on IOS based smart phone to serve for remote area people [4]. The doctor is able to axis the data from the cloud and provide the detail analysis of various data collected [5]. The removing of noise is so performed by using FIR and FFT filters [6]. The ECG monitoring system can also be designed as the remoteness as a part of their private home network moderately than being more dependable home control system [7]. There are so many devices which detects the ECG signal and these electrodes are used in textiles, seat belts, wrist watch and mobile case [8]. The signal is controlled by controller and sent to the cloud in this survey they have used MSP430 single chip to control the signal [9]. The original ECG signal is compared with the various filter output and also, they have calculated the power spectral density and signal to noise ratio before and after filtering [10]. There are many sensors available in the market to detect the ECG signal like wireless sensors, MEMS and Nano technology is developing different type of portable wireless sensors for the better life [11]. The command used helps in sending and receiving the data from cloud this process is obtained by HTTP and MQTT protocols [12]. Since the smart phone are limited in power consumption and are very easily portable the heart beat data is transmitted to the smart phone, but it requires great

Authorized licensed use limited to: UNIVERSITY OF BIRMINGHAM. Downloaded on May 10,2020 at 01:08:12 UTC from IEEE Xplore. Restrictions apply.

skills to reach out to provide the mobile application to all OS.

In introduction, The review of ECG system design related work is discussed. In Section II the detailed system architecture was discussed along with its application. Section III introduces steps to read ECG data through electrode for analysis and mobile application design. The last section concludes the project work with future scope.

II. SYSTEM ARCHITECTURE

The ECG monitoring system architecture is exemplified in Figure 1, primarily divided into four parts they are: 1. Sensor module, 2. Controller module, 3. Bluetooth module and 4. Android mobile.

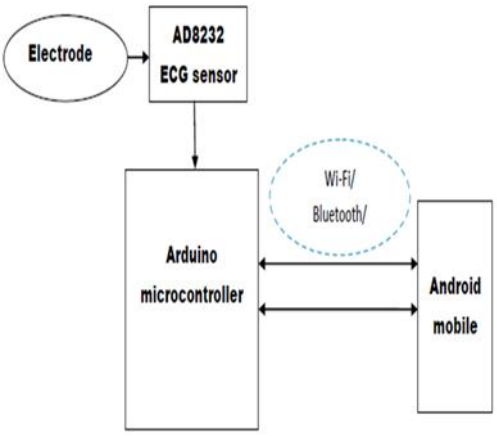

Figure 1: Block diagram of the proposed system

The ECG signal is obtained by placing electrodes on the body part these signals are amplified by using AD8232 sensor which utilize low power and reduce the noise. The output signal of the sensor is given to analog pin of the Arduino Uno board. The threshold level of the heart beat is fixed which will be compared with the obtained signal and thus this data is sent to Android mobile via Bluetooth. Based on the threshold level the real time-tested ECG signal display the result on the mobile with the heartbeat.

A. Sensor module:

The sensor module has two part.

1) Electrodes:

The electrodes used in this project is disposable electrodes which offers fast, easy, and more hygienic which is alternative to reusable electrodes or wet electrodes. These electrodes are pre gelled and these are called dry electrodes which will be good for patient skin. Instead of using 12 lead electrode system and keeping the bulk device its been used 3 lead electrode system devices as shown in Figure 2, where the electrodes are placed on the right-hand wrist (R-Red), left-hand wrist (G-Green) and the right-leg ankle (Y-Yellow).

Figure 2: Dry electrodes with color code pins.

2) AD8232 ECG Sensor:

The heart rate electrical movement is measured by this small chip called AD8232[12]. Figure 3 shows sensor module which is non-harmful and it measure the heart rate and gives the signal which can be directly connected to any controller like MSP430, Arduino, Raspberry-pi. This sensor is designed to extract the signal even when the electrodes are poorly in connection with the body. The extracted signal is then amplified. This design helps to obtain the output signal easily from an embedded controllerdevice or from an analog-to-digital converter (ADC) ultralow power device.

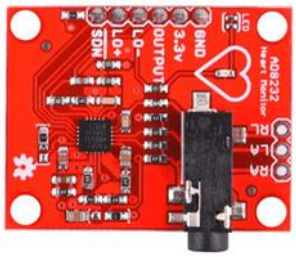

Figure 3: AD8232 Sensor.

The AD8232 is a cohesive front end for signal acclimatizing of heart biopotentials and for heart rate monitoring. It consists of a particular instrumentation amplifier, a right leg drive amplifier, an operational amplifier and a mid-supply reference buffer. In addition, the AD8232 contains leads off recognition circuitry and an

Authorized licensed use limited to: UNIVERSITY OF BIRMINGHAM. Downloaded on May 10,2020 at 01:08:12 UTC from IEEE Xplore. Restrictions apply.

automatic fast reinstate circuit that brings back the signal soon after leads are reconnected. The AD8232 comprises a specialized instrumentation amplifier that amplifies the ECG signal while refusing the electrode half-cell latent on the same stage. This indirect present feedback architecture is possible to achieve by reducing size and power compared with traditional implementations. The below Figure 4 shows pin configuration of AD8232 sensor.

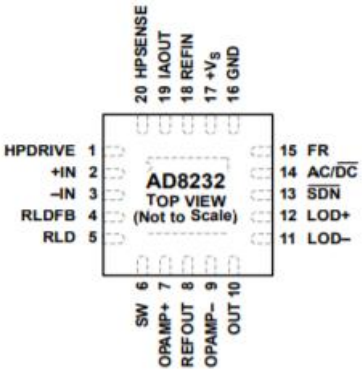

Figure 4: Pin configuration of AD8232 sensor.

B. Controller module:

Based on the Microchip ATmega328P microcontroller Arduino UNO is an open-source microcontroller board which is shown in Figure 5. This board have 14 digital pin and 6 analog pin this controller is programed using Arduino software. This board operates at 5V and its capable of 7V-20V Figure 6 shows the architecture view of arduino uno controller. The Atmel ATmega328 microcontroller is as shown in Figure 7 which is 8bit controller with 32KB program flash memory and it provides 20MHz max clock frequency. The programmable code is written in c.

Figure 5: Arduino Uno controller module.

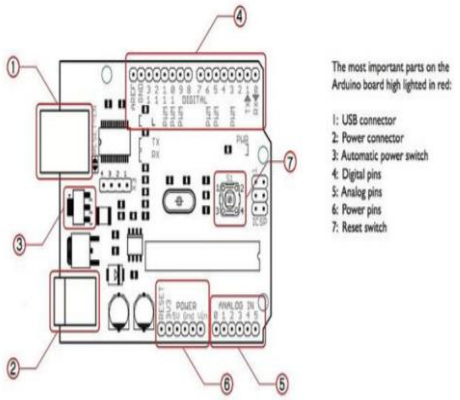

Figure 6: Pin configuration of controller

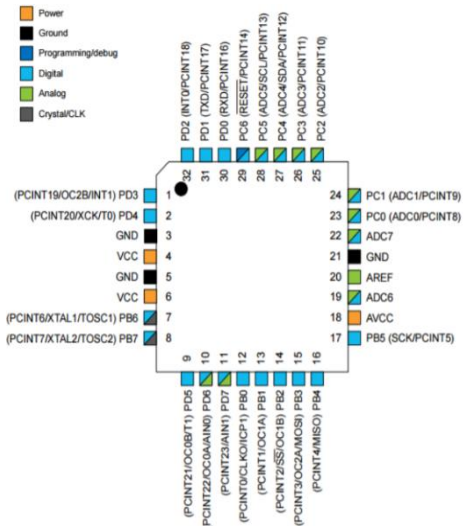

Figure 7: ATmega328 microcontroller coniguration

C. **Bluetooth module:**

The Transparent serial wireless connection is performed by device HC-05. This module can be used as both master and slave configuration. It has 6 pins and operates at 3.3V. The slave baud rate is fixed to 9600.

D. Android Mobile:

The android code is added to mobile by changing the setting in developers. The run code creates an application. When the Bluetooth of mobile is paired with HC-05 Bluetooth the real time data is sent from controller to mobile during on and display the ECG heart beat and its condition.

Authorized licensed use limited to: UNIVERSITY OF BIRMINGHAM. Downloaded on May 10,2020 at 01:08:12 UTC from IEEE Xplore. Restrictions apply.

III. DESIGN OF MOBILE APPLICATION

This project has two part in software where first part is to control the ECG signal extracted by sensor and second part is sending data to mobile.

Intial the ECG signal obtained from AD8232 sensor is convereted into digital data using Ardunio board. The voltage converted serial data obtained via USB is recived and dispalyed on the monitor. The C program written to filter noise without losing the important data of ECG waveform. The Serial plotter software used to plot the ECG waveform on monitor as shown in Figure 8.

Android application is developed using Java programming language which has built in libraries for Bluetooth connectivity. The filtered signal from Arduino is compared with the threshold value and the condition of the patient is displayed. Figure 9 shows the application before connecting with the Bluetooth . Figure 10 shows the mobile application display window along with the patient result.

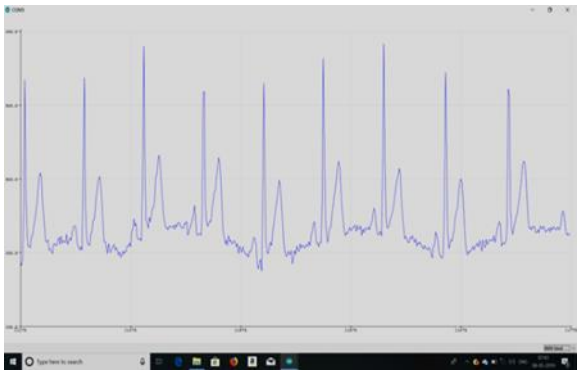

Figure 8: Screenshots of ECG signal

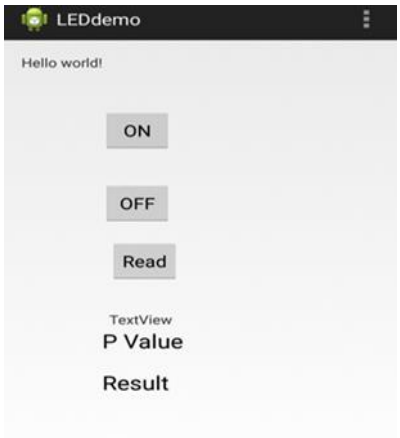

Figure 9: Application developed for android mobile

Figure 10: Heartbeat and its condition displayed in android mobile

The working step to monitor ECG signal throgh App is as follow:

Step 1: Placing electrode on the wrist and the anclet based on the color code.
Step 2: Ecg signal acquired throgh electrode is read by sensor and furter processed by controller.
Step 3: Establish connection between the mobile phone and HC-05.
Step 4: Run the code to analyze the signal.
Step 5: ECG signal is displayed with the help of arduino software.
Step 6: Simultaniously the heart rate displayed in mobile application.

IV. CONCLUSION

In this project, we designed and implemented medical related smart technology for remote area and home use which monitors the ECG signal and displays the heart beat in real time use. Three wearable monitoring electrode provides the satisfactory accuracy in real time. These data are filtered and sent to the mobile application. Further studies is on the obtaining the time between R-R interval and also improving the accuracy level of the signal to analyze the various cardiac problems using c code in Arduino software. The future scope of this project is to develop an efficient algorithm for long term analysis and Wifi technology can be used to enhance the data transmission of the signal.

ACKNOWLEDGMENT

I would like to acknowledge the guidance, and opinion given by Mrs. Anitha S Prasad, Assistant professor, Department of E&C, JSS Science and Technology University, Mysuru and Technology for helping as per our need.

Authorized licensed use limited to: UNIVERSITY OF BIRMINGHAM. Downloaded on May 10,2020 at 01:08:12 UTC from IEEE Xplore. Restrictions apply.

REFERENCE

[1] A. Gacek and W. Pedrycz, "ECG Signal Processing, Classification and Interpretation A Comprehensive Framework of Computational Intelligence". London, U.K.: Springer, 2012.

[2] João Martinhoa, Luís Pratesa, João Costaa,b* "Design and Implementation of a Wireless Multiparameter Patient Monitoring System"

[3] C. VENKATESAN1, P. KARTHIGAIKUMAR 2, (Member, IEEE), ANAND PAUL 3, S. SATHEESKUMARAN4, AND R. KUMAR5 "ECG Signal Preprocessing and SVM Classifier-Based Abnormality Detection in Remote Healthcare Applications"

[4] Furkan AVCU*, Adnan KAVAK*, and A. Burak İNNER* *Kocaeli University, Computer Engineering Department, Izmit/Turkey furkanavcu@icloud.com, akavak@kocaeli.edu.tr, binner@kocaeli.edu.tr "QRS Detection on IOS Platform Based on Single Channel Practical ECG Measurement for Remote Patient Monitoring"

[5] Akshatl a, Gauravlb, Zahid1'0, Bhupendrald, Aditi2 e, *Sachin Kumar1'f, Maneesha1'8, Praveen Pandey1,h, 'Department of Electronics, Maharaja Agrasen College, University of Delhi, Delhi, India department of Electronic Science, University of Delhi South Campus, Delhi, India, "A Smart Healthcare Monitoring System Using Smartphone Interface" .

[6] Sudip Deb, Sheikh Md. Rabiul Islam, Jannatul RobaiatMou,Md. Tariqul Islam, "Design and Implementation of Low Cost ECG Monitoring System for the Patient using Smart Device" .

[7] Nilanjan Dey, Amira S. Ashour, Fuqian Shi, Senior Member, IEEE, Simon James Fong and R. Simon Sherratt, Fellow, IEEE, "Developing Residential Wireless Sensor Networks for ECG Healthcare Monitoring".

[8] Md. Shaad Mahmud 1, Honggang Wang1, A.M. Esfar-E-Alam1, Hua Fang1,2, 1, University of Massachusetts, Dartmouth, USA 2, University of Massachusetts Medical School, USA, "A Wireless Health Monitoring System Using Mobile Phone Accessories".

[9] Hongli Yang*, Jihong Chai, "A Portable Wireless ECG Monitor Based on MSP430FG439".

[10] Aneja, Manpreet & Singh, Birmohan &, Seema. (2011). "Comparison of different approaches for removal of Baseline wander from ECG signal". International Conference and Workshop on Emerging Trends in Technology 2011, ICWET 2011 - Conference Proceedings. 5. 1290-1294. 10.1145/1980022.1980307.

[11] Dhruba Jyoti Bora1,2, Neelesh Kumar1, Ritushree Dutta1,3 ISSN 2043-6386 Received on 7th March 2018 Revised 12th June 2018 Accepted on 17th July 2018 E-First on 13th November 2018 doi: 10.1049/iet-wss.2018.5049 www.ietdl.org, "Implementation of wireless MEMS sensor network for detection of gait events".

[12] Zhe Yang1·Qihao Zhou1·Lei Lei2·Kan Zheng1 ·Wei Xiang3, "An IoT-cloud Based Wearable ECG Monitoring System for Smart Healthcare".

Authorized licensed use limited to: UNIVERSITY OF BIRMINGHAM. Downloaded on May 10,2020 at 01:08:12 UTC from IEEE Xplore. Restrictions apply.