Portable ECG Monitoring System Design

Tang Lili
College of Computer and Information Engineering
Zhixing College of Hubei University
Wuhan, P.R. China
E-mail: toney2001@126.com

Huang Wei
The Fourth Laboratory
System Design Institute of Hubei Aerospace Technology
Academy Wuhan, P.R. China
E-mail: 34446549@qq.com

***Abstract*—ECG acquisition and monitoring system has important significance in the diagnosis of cardiovascular disease and the maintenance of health. This article thoroughly and systematically introduces the design of A low power portable ECG monitoring system. The system functions include ECG acquisition, signal conditioning, digital filtering, dynamic electrocardiogram display, data local storage and remote transmission, etc. The ECG acquisition unit uses ADI ECG monitor to simulate the front-end AD8232, the main control unit adopts 16-bit low-power MSP430F5529 MCU of Texas Instrument, the display unit can realize local LCD display and Android client displays, and the data transmission unit can achieve accessing to the Internet via UART to WIFI converter and the remote data transmission. The portable ECG monitoring system is of great value, which can be put into use only with a little package.**

Keywords-ECG monitoring; portable; Android client display; remote transmission

I. INTRODUCTION

ECG is an important physiological signal of the human body. It contains a lot of information about the pathological state of the heart, reflecting the heart and cardiovascular structure and its physiological and pathological information. The ECG signal is an unstable natural signal emitted by a complex living body. Not only is the signal very weak, but it is also susceptible to interference and interference from the external environment and the human body. ECG monitoring includes ECG signal acquisition, conditioning, analog filtering, AD conversion, digital filtering, data storage and data transmission, and dynamic ECG display. The peak-to-peak value of the ECG signal is about 1mV [1], and the acquisition process is susceptible to electromagnetic radiation, power frequency interference, baseline drift of the analog front end, common mode interference, and the influence of EMG interference caused by the human body's own activity. The requirements for sensors, acquisition system hardware and environment are relatively high when ECG signals are collected. Heart disease has become a frequently-occurring disease and a common disease that endangers human health. Therefore, research on ECG diagnosis and monitoring based on modern information technology has become one of the important topics in medical research. The traditional PC-based ECG machine is bulky, expensive, and consumes a lot of power, making it difficult to achieve 24-hour monitoring of ECG. In recent years, with the rapid development of embedded and IoT technologies, the rise of low-power, portable wearable devices, more and more designs and applications are moving toward smart, low-power, portable, so portable The design of the electrical monitoring system is of great significance.

The research was sponsored by the Science and Technology Research Program of 2018 Hubei Provincial Education Department (Project No. B2018405).

978-1-7281-3584-7/19/$31.00 ©2019 IEEE

II. OVERALL DESIGN

The portable ECG monitoring system consists of an ECG acquisition unit, a main control unit, an LCD liquid crystal, an SD memory card, a UART-WIFI Ethernet converter, an Android client, and a Linux client. The specific implementation process is as follows: First, the ECG acquisition unit performs ECG signal acquisition, voltage gain amplification, high-pass filtering, and low-pass filtering. Thereafter, the main control unit performs AD conversion, FIR digital filtering, and heart rate on the ECG analog signal. Finally, the LCD liquid crystal module dynamically displays the ECG waveform and heart rate value in real time, and the SD card records the ECG data in real time, the UART-WIFI converter transmits the ECG data processed by the main control unit to Android client and Internet respectively through the button control menu. The overall system design is shown below.

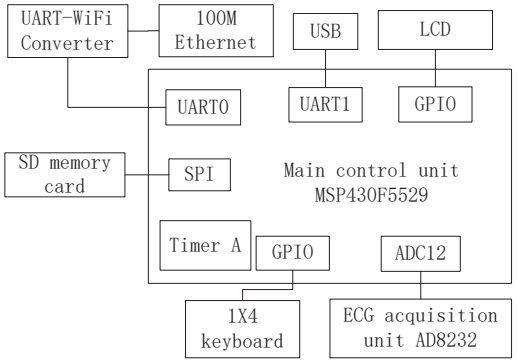

Figure 1. System overall design block diagram.

III. SYSTEM FUNCTION UNIT OVERVIEW

A. Introduction of the main control unit

MSP430F5529 microcontroller is mainly for the practical application needs. It integrates a number of analog circuits, digital circuits and microprocessors on one single chip to provide a monolithic solution [2]. The design of the portable ECG monitoring system mainly needs to configure the main system clock MCLK, the subsystem clock SMCLK, the

Authorized licensed use limited to: University College London. Downloaded on June 19,2020 at 01:17:51 UTC from IEEE Xplore. Restrictions apply.

auxiliary clock ACLK of the main control unit, and at different high and low frequencies respectively to maintain the balance between the processing speed of the system and the ultra-low power consumption, and the ECG sampling rate and the system tick clock are controlled by the timer_A timer, and the AD sampling and quantization is performed by the internal 12-bit ADC 12 to complete subsequent digital filtering, waveform display, and data transmission. At the same time, the data sampled by AD is subjected to FIR digital filtering and heart rate calculation through the ECG data processing program [3]. The USCI_Ax of the Universal Serial Communication Interface is used to transmit the processed ECG data to the computer and WIFI network by UART to USB and UART to WIFI.

B. ECG simulation front end

The ECG acquisition circuit is composed of Analog Devices' ECG analog front end AD8232 [4], configured with an amplification gain of 1100 and a frequency range of 0.48 - 41 Hz. It supports the right leg drive circuit, fast recovery circuit and DC three-electrode drop detection. ECG signals are connected to the ECG analog front end through universal AgCl electrodes to obtain optimal acquisition and conditioning. The gain amplifier circuit amplifies the mV-level ECG signal by 1100 times to V level through an instrumentation amplifier and an operational amplifier to facilitate AD sampling conversion, and the filter circuit controls the frequency band range of the ECG signal to 0.48 - 41 Hz. In order to eliminate 50Hz power frequency interference, EMG interference and the circuit's own common mode interference, baseline offset and other interference [5].

C. LCD display and button control circuit

In order to achieve friendly interface interaction, information display, function control, etc. We choose LCD with 84×48 resolution to display the status information and the real-time dynamic ECG waveform through the function menu of each module. The four buttons are sequentially configured to turn up the menu, the menu is turned down, OK, and exit. The currently selected menu item is displayed by the liquid crystal highlight effect. Menus can be nested into multiple levels of menus. Jump between different menus is achieved by button control.

D. SD memory card circuit

After the electrical data of the design center is collected and processed, it needs to be stored locally and record the ECG data to realize local data query and remote data query. The SD memory card circuit adopts the SPI bus topology structure, and the SPI module of the MSP430F5529 operates the data reading and writing of the SD card. The SD card control program encapsulates the underlying functions such as SD card initialization, mode detection, SD card command transmission, CSD/CID register instruction transmission, sector length setting, single block data reading and writing, and multi-block data reading and writing. Of course, only calling these functions can read and write data, but the data can not be obtained by the user. Therefore, this design must be a file system migration. For small-capacity SD memory cards, the FAT32 file system is the best choice [6]. Through the management of the FAT32 file system, ECG data can be read, written and accessed by users.

E. UART-WIFI Converter

WIFI wireless transmission is realized by USR-WIFI232-D2 serial to WIFI/Ethernet module. The module uses 802.11 b/g/n wireless communication protocol, firmware supports WIFI protocol and configuration, TCP/IP protocol stack and so on. Its internal packaged network protocol enables UART to WIFI, UART to Ethernet, Ethernet to WIFI data conversion. When the module is started, the nReady light is illuminated and the nLink light is illuminated when WIFI is connected. The current working state of the module can be judged by the brightness of the two sets of LED.

The working mode of the selected module is transparent transmission, which means that the data is automatically converted from the serial port UART protocol to the corresponding network protocol of the parameter setting. The process is automatically completed by the module, and the module is configured as AP + STA mode. The AP, that is the wireless access point, is a central node of a wireless network; the STA, that is the wireless station, is a terminal of a wireless network. After the configuration is successful, you can connect to local area network through TCP server or client, and connect to AP through Internet to connect to remote server [7].

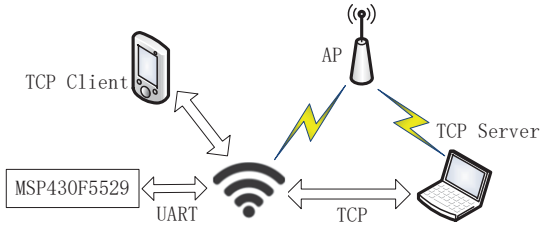

Figure 2. AP+STA wireless networking.

IV. SYSTEM PROGRAMMING PROCESS

In this design, there are many function modules and complicated program flow. Users can control the function modules through the interaction of the menu interface. After the system is powered on or after power-on reset, there will be a few seconds of boot animation to ensure that the MSP430F5529 starts the clock and the power is stable. Thereafter, the system initializes the system clock, timer, LCD liquid crystal, ADC, UART, SPI, SD card, WIFI module, and so on. After the system is initialized, enter the first level control menu interface and enter the low power mode. When the user operation is detected, the low power consumption is exited into the working mode. After the button is confirmed, the user enters the corresponding secondary menu according to the user's control to perform related operations. When each function is running, if the user's exit operation is detected, return to the previous menu to enter the low power mode and wait for user control.

Authorized licensed use limited to: University College London. Downloaded on June 19,2020 at 01:17:51 UTC from IEEE Xplore. Restrictions apply.

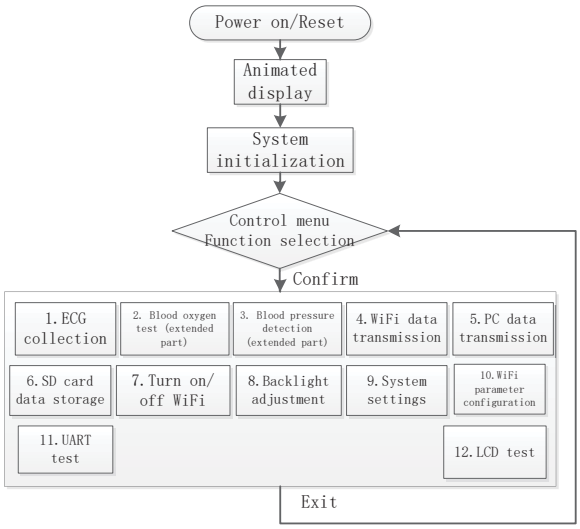

Figure 3. System programming flow chart.

V. SYSTEM DEBUGGING AND RESULTS ANALYSIS

The ECG monitoring system consists of a main control unit, an ECG acquisition unit, a button control circuit, an LCD liquid crystal, an SD memory card, a UART-WIFI converter, and an Ethernet port.

A. Local LCD ECG waveform display

After starting or resetting the system, wait for the boot animation to complete and initialize. After that, enter the ECG collection menu, and no lead wires are connected at this time. The lead-off detection circuit detects that the lead wire is not connected, and can display the prompt message that the lead wire is not connected on the LCD liquid crystal display interface, and stops the AD sampling.

Figure 4. Lead off warning interface.

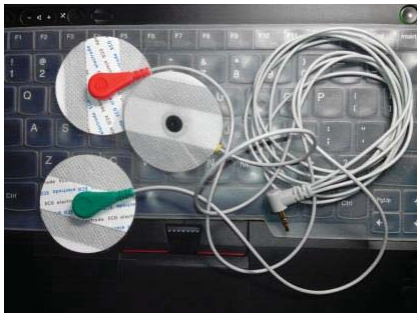

Figure 5. ECG sampled AgCl electrode and lead wire.

After connecting the lead wire, you can see the dynamic ECG waveform and heart rate value displayed in real time as shown below.

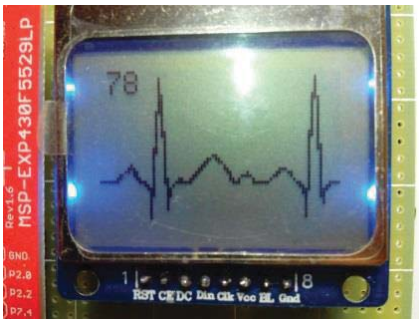

Figure 6. ECG waveform and heart rate value.

B. Android client ECG waveform display

Enter the WIFI data transfer menu and enable data transfer to WIFI via the button control menu. Turn on the WIFI for your Android phone and connect to the WIFI module. Run the Android client, enter the login interface and then fill in the port number and IP address of the WIFI module to confirm the login.

Figure 7. Enable data transfer.

Authorized licensed use limited to: University College London. Downloaded on June 19,2020 at 01:17:51 UTC from IEEE Xplore. Restrictions apply.

Figure 8. Android client login interface.

After entering the ECG collection menu, the data is sent to the Android client after the button is confirmed. The real-time display of the ECG waveform can be observed on the waveform display interface of the Android client.

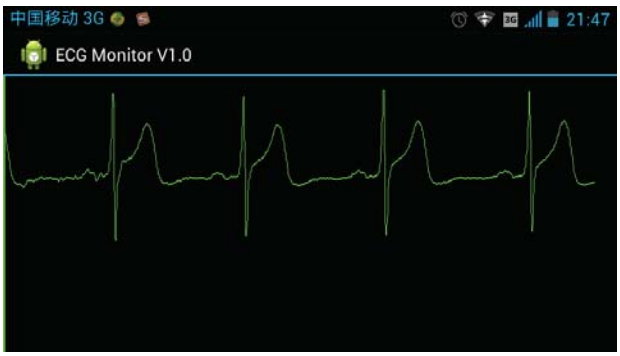

Figure 9. Android client ECG waveform display.

C. *Linux client real-time data display*

Connect the WIFI module to the AP hotspot where the Linux client is located. At this time, the Link light of the WIFI circuit will illuminate, indicating that the AP hotspot is successfully connected. At the same time, the IP address of the Linux client and the WIFI module must be set on the same network segment [8]. The IP address of the WIFI module is 10.10.100.254, and the IP of the Linux client is set to static IP: 10.10.100.101. Use the Linux directive ifconfig to get the IP information of the Linux client. Then, input the IP address and port number of the WIFI module to run the Linux client, and transfer the data to the PC through the button control menu. After entering the ECG collection menu, the data is sent to the Linux client after the button is confirmed. The real-time display of the ECG data can be observed on the Linux client interface. At this time, the data has been restored to the actual ECG voltage of the mV level.

VI. Conclusion

This design integrates electronic technology, single-chip microcomputer, digital signal processing, and the Internet into a complete system to realize the design and application of telemedicine. Among them, intelligent, low-power, portable is the design focus of ECG monitoring system. After the system debugging and detection, the overall system design is ideal, the performance is stable, the system power consumption is optimally controlled, the ECG waveform and heart rate value can be dynamically displayed in the local LCD and Android client, and the ECG data is locally implemented SD card storage and internet remote transmission.

This design also reserved many software function interfaces to achieve more functions expansion, such as blood oxygen, blood pressure detection and so on. At the same time, because the overall design does not take into account the huge amount of code in the later period, the RAM space of the main control unit MSP430F5529 is insufficient, so it can only tailor the relevant functions. For WIFI wireless transmission, the best solution is to implement a custom serial protocol. WIFI transmit two-way data with response and check according to data frame header, data type, data field and check code. To ensure the stable transmission of data and realize the real-time control of the ECG acquisition terminal by the server, this is the part of the design that can be optimized.

Acknowledgment

In this paper, the research was sponsored by the Science and Technology Research Program of 2018 Hubei Provincial Education Department (Project No. B2018405).

References

[1] Jan Adamec, “Dynamic ECG Analysis Manual,” People's Medical Publishing House. Beijing, December 2012.

[2] Texas Instruments, “MSP430x5xx User's Guide,” Texas Instruments. Dallas, January 2014.

[3] Chen Tianhua, “Heart sound and ECG signal analysis method based on modern signal processing technology,” China Machine Press. Beijing, January 2012.

[4] Analog Devices, “Single-Lead, Heart Rate Monitor Front End AD8232 User's Guide,” Analog Devices. Dallas, January 2012.

[5] Sergio Franco, “Circuit design based on operational amplifiers and analog integrated circuits,” Xi'an Jiaotong University Press. Xi'an, January 2018.

[6] Microsoft Corporation, “Microsoft Extensible Firmware Initiative FAT32 File System Specification,” Microsoft Corporation. Redmond, January 2000.

[7] Zeng Hong'an, “Embedded application design comprehensive tutorial,” Posts and Telecommunications Press. Beijing, February 2014.

[8] Daniel P. Bovet & Marco Cesati, “Understanding the LINUX kernel,” Southeast University Publishing House. Nanjing, May 2019.

Authorized licensed use limited to: University College London. Downloaded on June 19,2020 at 01:17:51 UTC from IEEE Xplore. Restrictions apply.