CS305
Computer Architecture

Data Hazards in the Pipeline

Bhaskaran Raman
Room 406, KR Building
Department of CSE, IIT Bombay

http://www.cse.iitb.ac.in/~br

Structural
→ Data
Control

Data Hazards

- Data dependence across instructions ➔ data hazard
  - Register dependence
  - Memory dependence
- Example (DLX instruction set):
  - `ADD R1, R2, R3`
  - `SUB R4, R1, R5`
  - `AND R6, R1, R7`
  - `OR  R8, R1, R9`
  - `XOR R10,R1, R11`
- All instructions after ADD depend on **R1**

Pipeline With Data Hazards

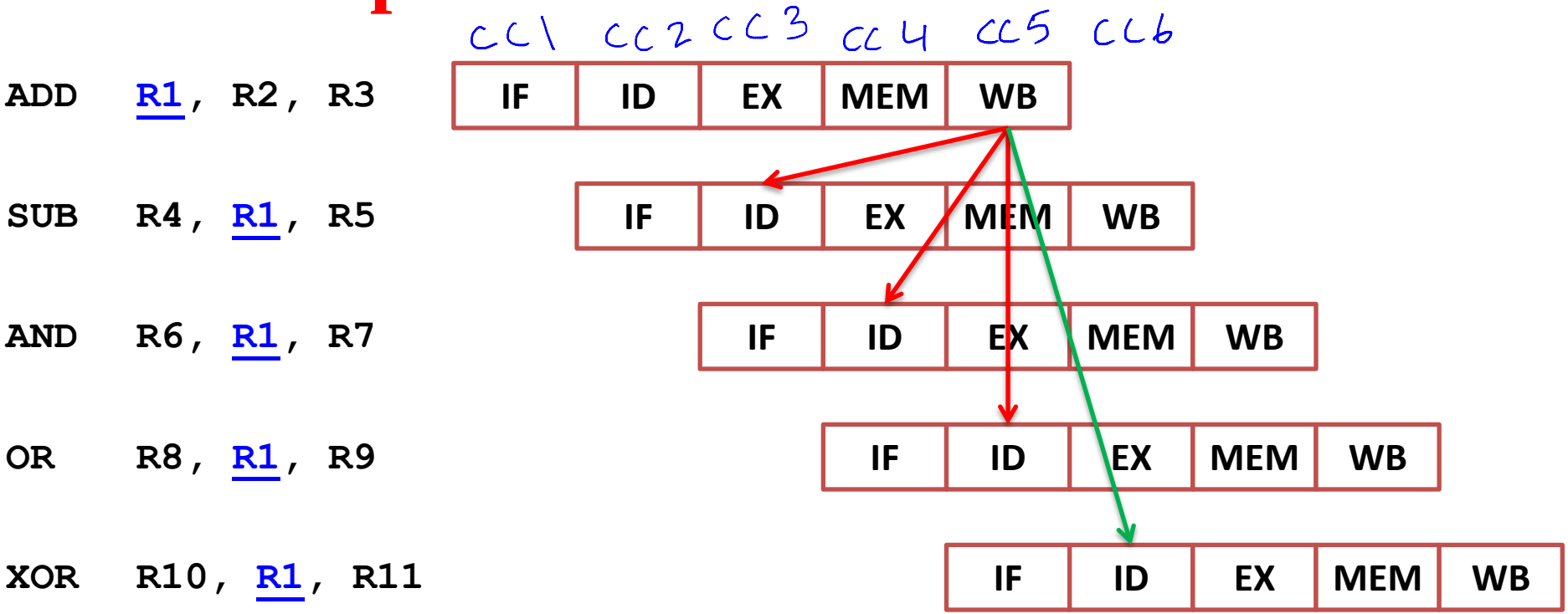

Data hazard: normal pipelined execution will produce **WRONG** result!
Solution? Can stall. Can we do better?

Register File: Reads after Writes

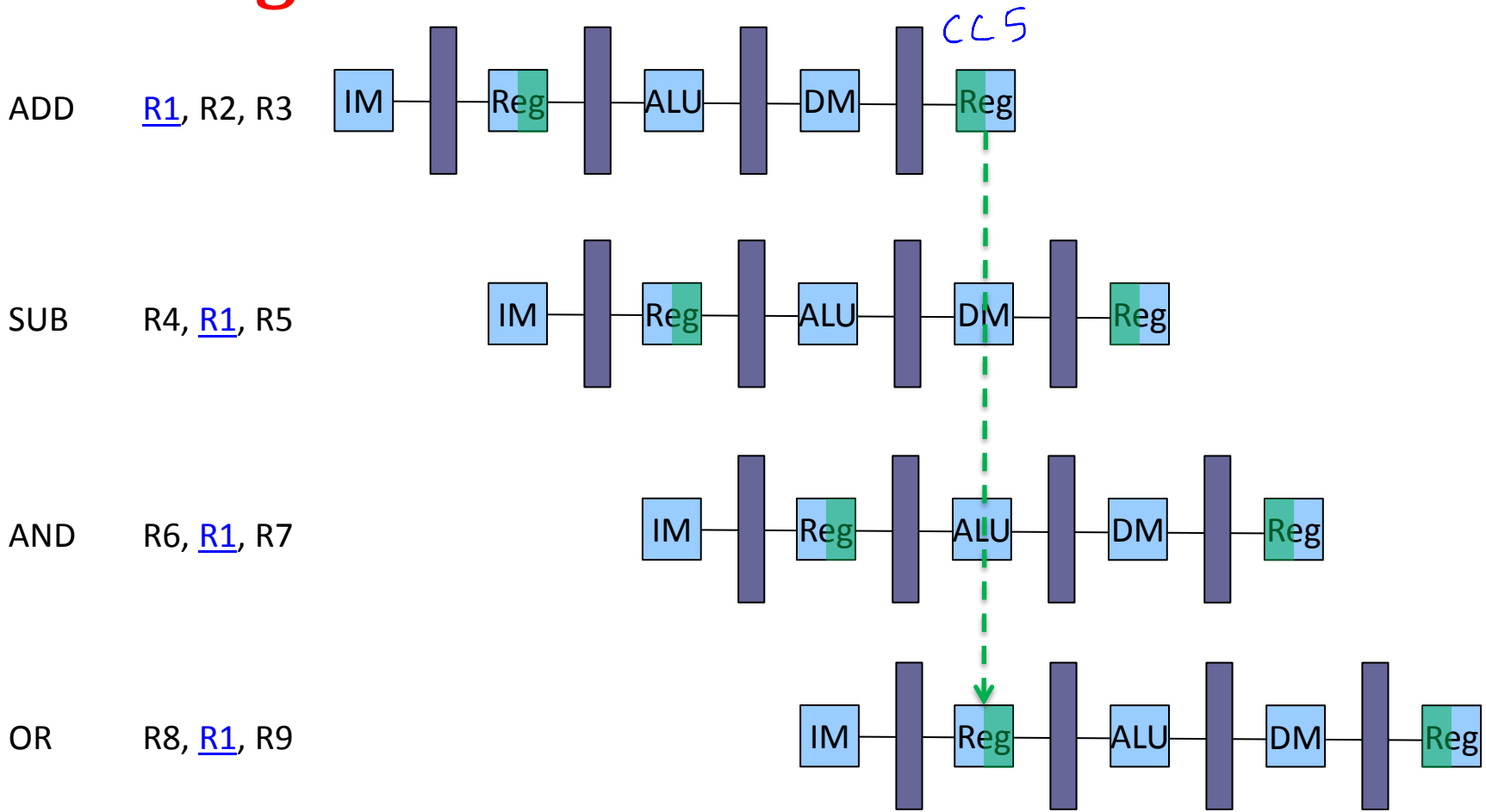

Minimizing Stalls via Data Forwarding

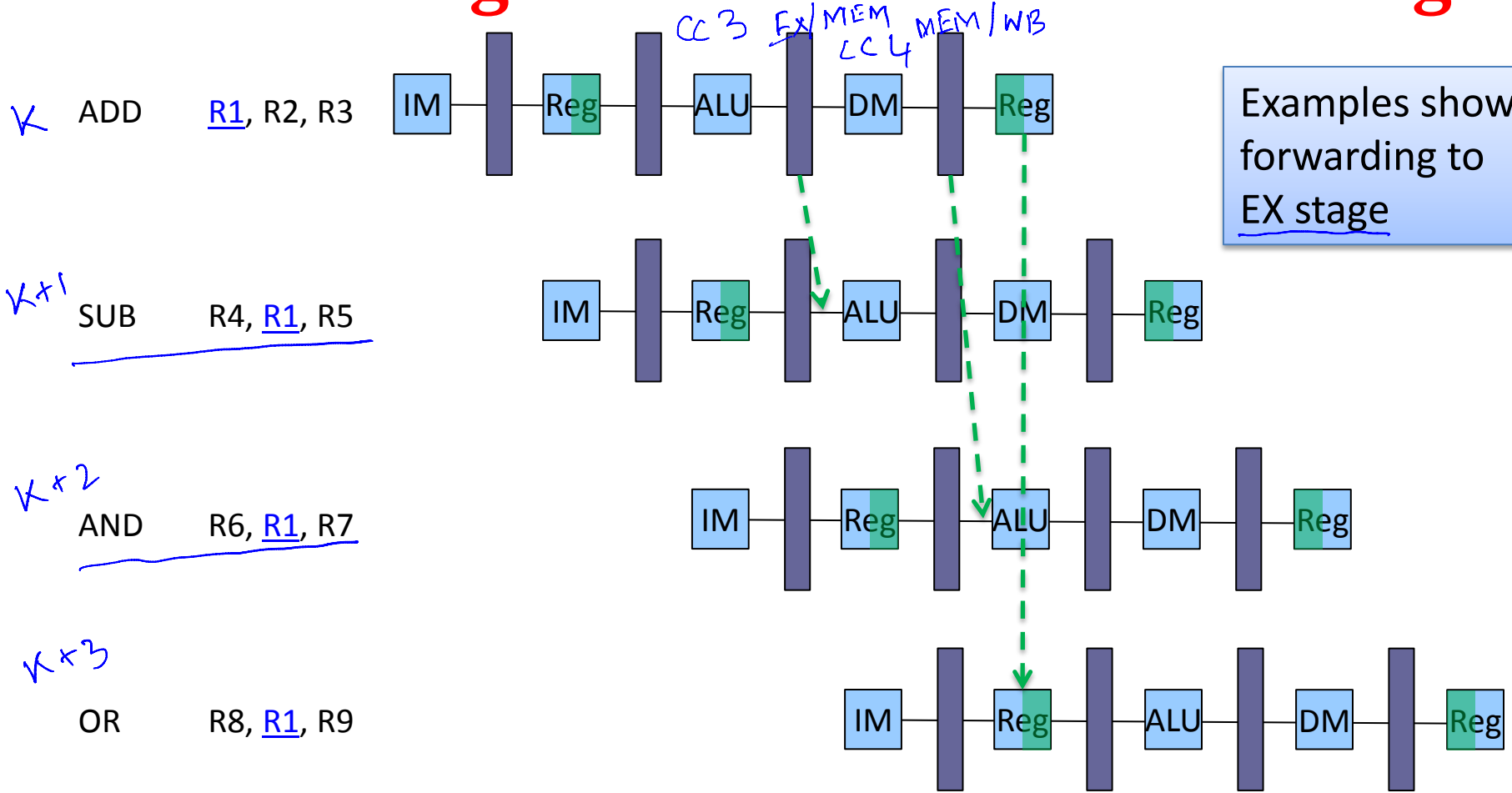

Examples show forwarding to EX stage

Data Forwarding to MEM Stage

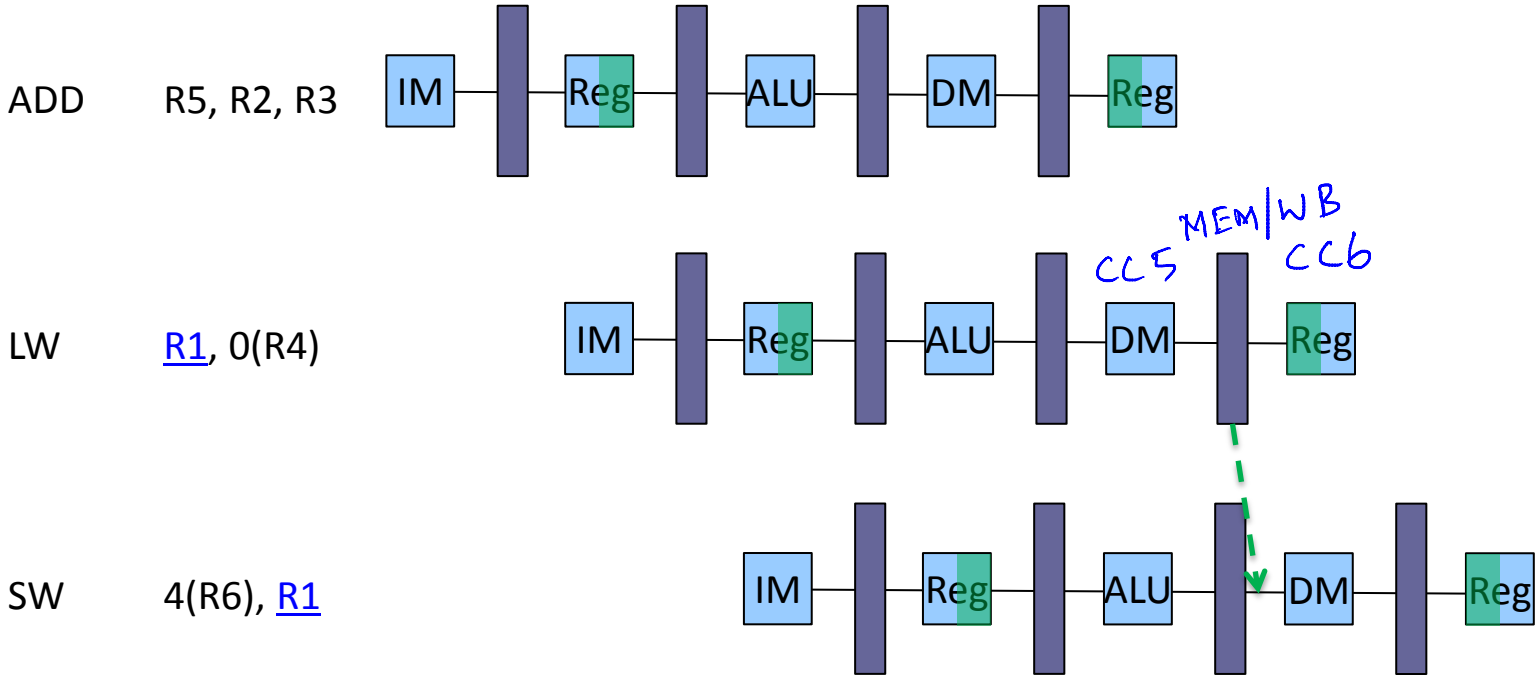

Data Forwarding to MEM Stage (continued)

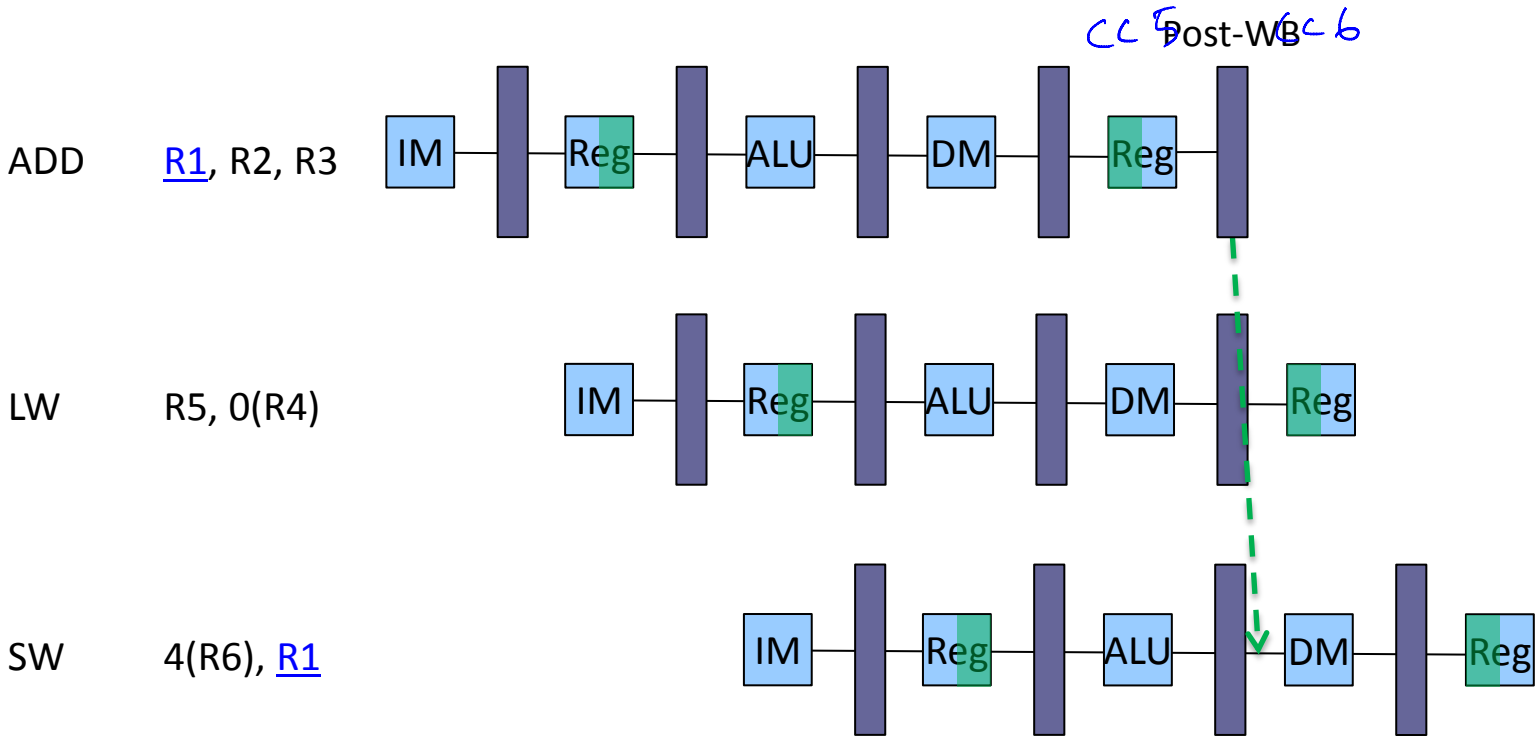

Memory Data Hazards

- Not possible in MIPS
  - Memory operations always happen in order

→ SW R1, X

→ LW R2, X

Data Hazard Classification

- **Read after Write (RAW):** use data forwarding to overcome
- **Write after Write (WAW):** arises only when writes can happen in different pipeline stages

	CC1	CC2	CC3	CC4	CC5	CC6
`LW R1, 0(R2)`	IF	ID	EX	MEM1	MEM2	**WB**
`ADD R1, R2, R3`		IF	ID	EX	**WB**	

  – Has other problems as well: structural hazards

- **Write after Read (WAR):** rare

	CC1	CC2	CC3	CC4	CC5	CC6
`SW R1, 0(R2)`	IF	ID	EX	MEM1	**MEM2**	WB
`ADD R2, R4, R3`		IF	ID	EX	**WB**	

Data Dependence Requiring a Stall

LW R1, 0(R4)

ADD R2, R1, R3

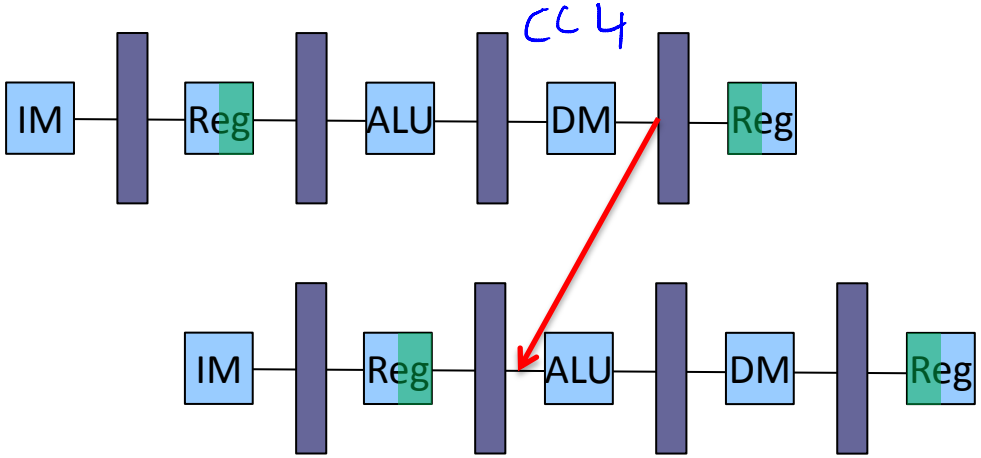

All data forwarding, stalling require control logic (reason for complexity in control)

Compiler's Role in Avoiding Stalls

```
a = b + c;
d = e + f;
```

Naïve compiler

```
LW    R1, b
LW    R2, c
ADD   R4, R1, R2
SW    a, R4
LW    R10, e
LW    R11, f
ADD   R12, R10, R11
SW    d, R12
```

Clever compiler

```
LW    R1, b
LW    R2, c
LW    R10, e
ADD   R4, R1, R2
LW    R11, f
SW    a, R4
ADD   R12, R10, R11
SW    d, R12
```

CPI without clever code scheduling = $1 + F_{\text{loads-causing-stalls}}$

Summary

- Data hazard: data dependence
  - MIPS: only RAW dependence in registers
  - Still, can have stall
- Need control logic for:
  - Data forwarding
  - Stalling