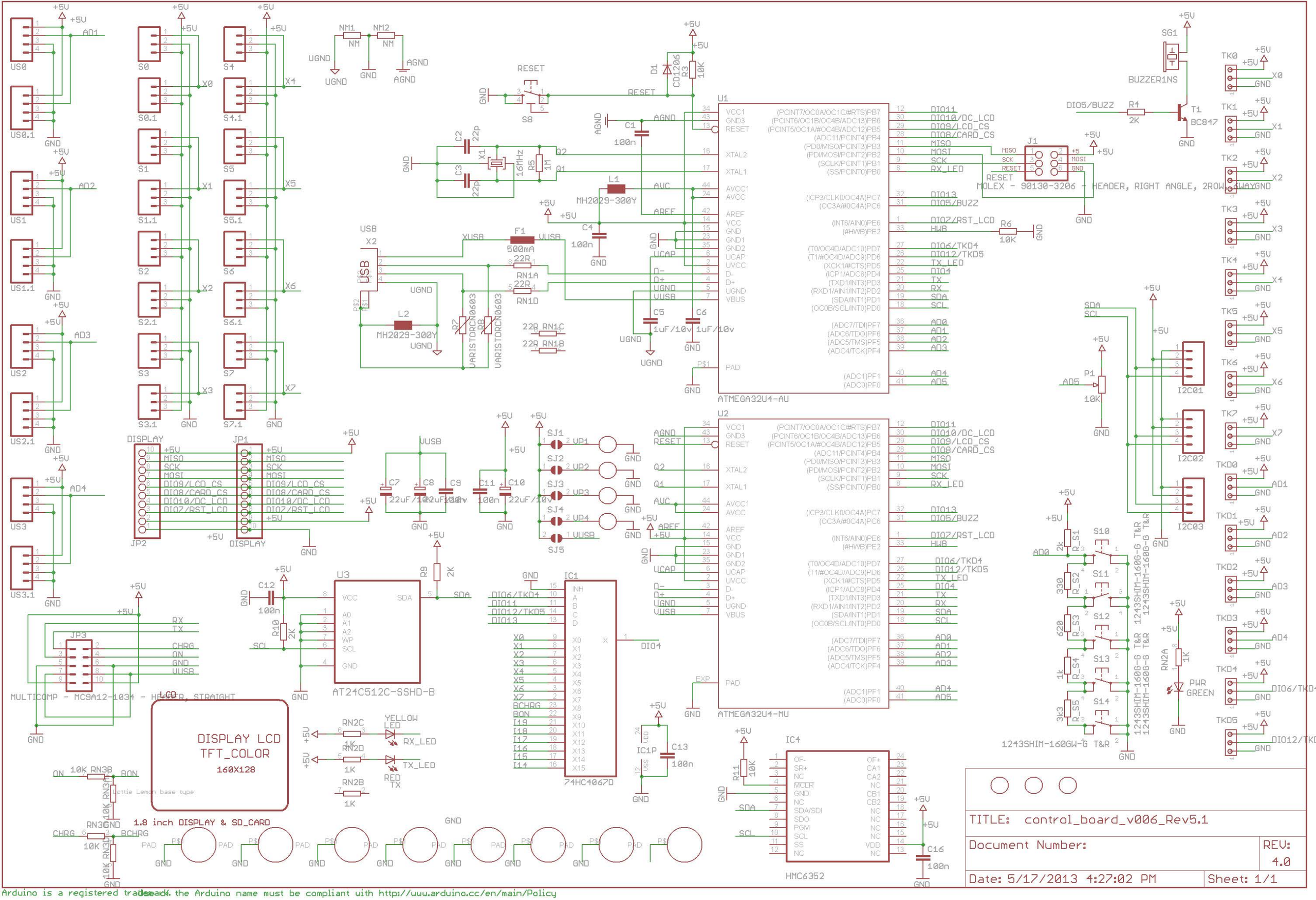


Arduino is a registered trademark. Use of the Arduino name must be compliant with http://www.arduino.cc/en/main/Policy

Reference designs are provided "as is" and with all faults. Arduino disclaims all other warranties, express or implied, regarding products, including but not limited to, any implied warranties of merchantability or fitness for a particular purpose. Arduino may make
The Customer must not rely on the absence or characteristics of any features or instructions marked "reserved" or "undefined". Arduino reserves these for future definition and shall have no responsibility whatsoever for conflicts or incompatibilities arising from
The product information on the Web Site or Materials is subject to change without notice.
Do not finalize a design with this information