Smart Agricultural Advisory System

Team Members:

- Prathamesh Thanekar – 231060074
- Abhijit Dalal – 241060901
- Rugved Bhalekar – 241060903

Problem We Are Solving

Today's farmers operate without access to real-time data about their fields, forcing them to make critical decisions based on intuition rather than evidence. This lack of information leads to inefficient resource use and suboptimal crop outcomes.

Key Challenges

- Water wastage from improper irrigation
- Poor crop management decisions
- Reduced yield potential
- Delayed response to crop stress

Our Solution

IoT Monitoring

Raspberry Pi-based field sensors collect real-time soil and climate data continuously

Machine Learning

AI analyzes patterns to generate predictive farming insights and recommendations

SMS Alerts

Critical notifications sent directly to farmers via GSM technology

Web Dashboard

Comprehensive reports and historical data accessible online

How the System Works

Data Collection

Multiple sensors continuously monitor soil moisture, temperature, pH, air conditions, and rainfall

Data Processing

Raspberry Pi processes incoming data and stores it securely for analysis

Pattern Analysis

Machine learning algorithms identify trends and predict potential crop risks

Insight Generation

System creates actionable farming advice tailored to current field conditions

Alert Delivery

Critical SMS alerts sent immediately to farmer's mobile device

Report Updates

Detailed analytics and recommendations updated on web dashboard

Hardware Components

Raspberry Pi 4

Main processing unit coordinating all sensors and communication

Soil Moisture Sensor

Measures water content in soil for optimal irrigation

Soil Temperature Sensor

Monitors root-zone temperature for crop health

Soil pH Sensor

Checks soil fertility and nutrient availability

DHT11/DHT22

Measures air temperature and humidity levels

Light Sensor (LDR)

Detects sunlight intensity for photosynthesis analysis

Rain Sensor

Detects precipitation to adjust irrigation schedules

GSM Module (SIM800/900)

Sends SMS alerts to farmer's mobile phone

Solar Panel

Sustainable power supply for remote field operations

Sensor Specifications & Components

Soil Moisture Sensor	YL-69 (Resistive) or Capacitive v1.2	Measures water content in soil using electrical conductivity	Soil moisture level (%) or analog value	To enable **smart irrigation**, prevent over/under watering, and trigger SMS alerts
Soil Temperature Sensor	**DS18B20 Waterproof Probe**	Measures temperature inside the soil near roots	Soil temperature (°C)	To monitor **crop root health** and detect heat/cold stress
Soil pH Sensor	**pH-4502C Probe + pH Sensor Module**	Measures acidity/alkalinity of soil	Soil pH value (0–14)	To assess **soil fertility** and advise fertilizer/lime application
Air Temp & Humidity Sensor	**DHT22 (AM2302)**	Measures ambient air conditions	Air temperature (°C), Humidity (%)	To analyze **microclimate**, predict crop stress and irrigation need
Light Sensor	**LDR Module (Light Dependent Resistor)**	Detects sunlight intensity	Light intensity (lux or analog)	To understand **photosynthesis conditions** and shading issues
Rain Sensor	MH-RD / YL-83 or FC-37 Rain Sensor	Detects presence and intensity of rainfall	Rain detected (Yes/No) + intensity	To **automatically stop/reduce irrigation** when raining
Communication Module	**SIM800L / SIM900A GSM Module**	Sends SMS alerts to farmer	(Sends messages, not data)	To provide **real-time alerts in rural areas without internet**

Circuit Diagram

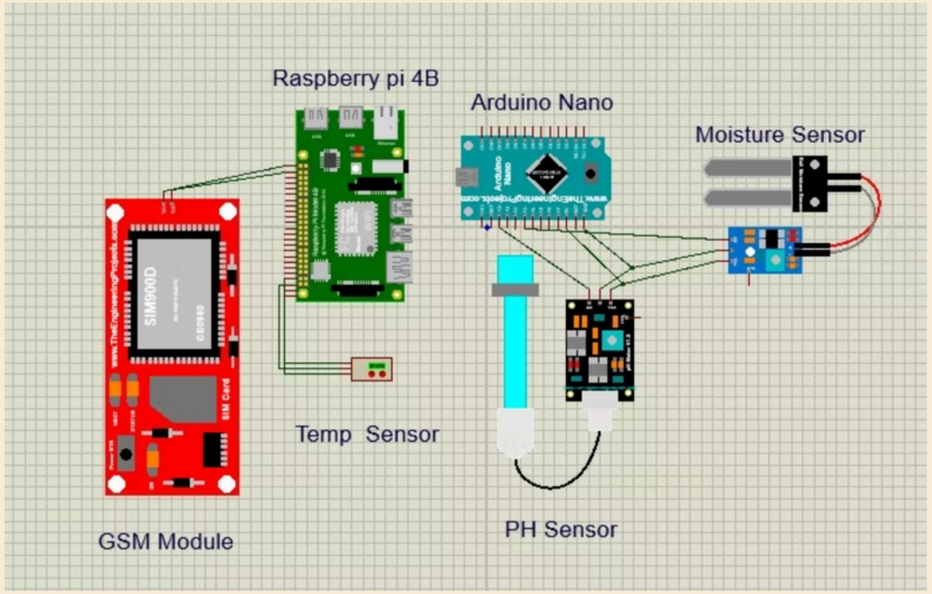

This circuit diagram illustrates the complete hardware interconnections of our smart agricultural system, showing how the Raspberry Pi 4B communicates with the Arduino Nano, GSM module for SMS alerts, and all sensor connections for real-time field monitoring.

System Architecture - Data flow

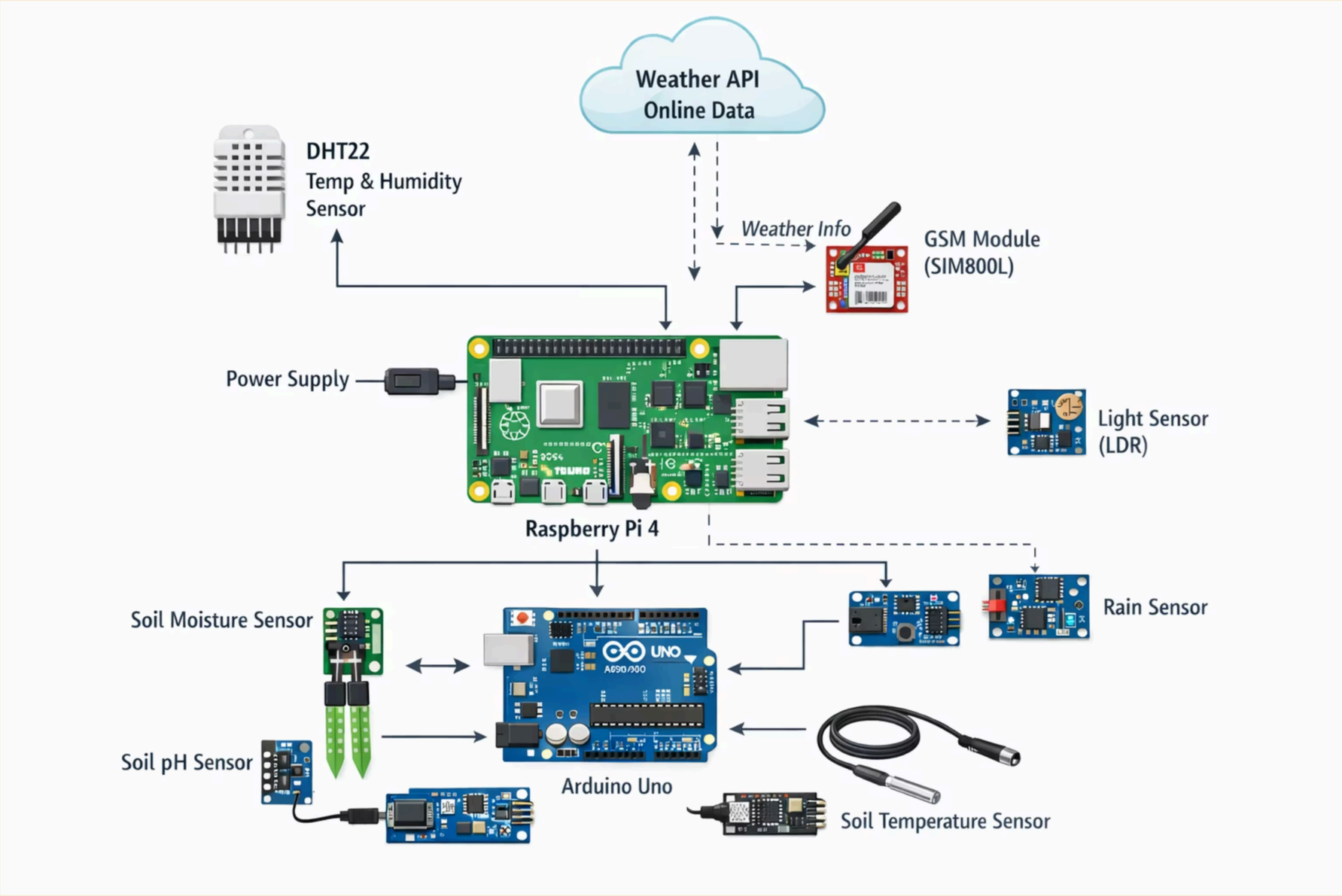

Datasets Used in Our Project

Global Datasets

Crop Recommendation Dataset: https://www.kaggle.com/datasets/atharvaingle/crop-recommendation-dataset

Irrigation Water Requirement Prediction Dataset: https://www.kaggle.com/datasets/miadul/irrigation-water-requirement-prediction-dataset

Indian-Specific Datasets

YIELD PREDICTION (INDIA)

Indian Historical Crop Yield and Weather Data: https://www.kaggle.com/datasets/zoya77/indian-historical-crop-yield-and-weather-data

Dashboard & Technology Stack

What Will Be Shown on the Dashboard

- Live Sensor Data (Soil Moisture, Temperature, pH, Humidity, Light, Rain)
- Real-time Alerts & Notifications
- Historical Trend Graphs
- NLG Advisory Pane
- Irrigation Recommendations

Software & Technology Used

- Frontend: React / HTML / CSS / JavaScript
- Backend: Python (Flask / FastAPI)
- Database: SQLite / MySQL
- Machine Learning: Scikit-learn
- Communication: GSM/SMS API
- Hosting: Cloud Server / Local Server

UN Sustainable Development Goals

SDG 2: Zero Hunger

Improving crop productivity and yield through data-driven farming practices ensures more reliable food production for growing populations

SDG 13: Climate Action

Promoting efficient resource use by optimizing water irrigation and reducing environmental impact through precise, sustainable farming methods

SDG 15: Life on Land

Supporting sustainable soil management practices that preserve land quality and ecosystem health for future generations

Conclusion

Impact Delivered

- Empowers farmers with real-time data for better decision-making
- Reduces water wastage through precision irrigation
- Minimizes crop stress with timely interventions
- Provides accessible, data-driven advice via SMS
- Functions reliably in rural areas using GSM connectivity