TITLE OF THE PROJECT:

E-WASTE DETECTION AND SEGREGATION BOT

THE PROBLEM:

With the ever-increasing reliance on electronic devices in modern society, the volume of electronic waste (e-waste) generated globally has surged at an alarming rate. E-waste contains a complex mixture of reusable metals, plastics, and hazardous substances, including heavy metals like lead, cadmium, and mercury. However, due to the lack of effective segregation techniques, a large portion of this waste ends up in landfills or is processed under unsafe and unregulated conditions, leading to serious environmental and health hazards.

Traditional e-waste disposal and recycling methods are largely manual, inefficient, and pose significant risks to workers. The challenge lies in the efficient identification and separation of different types of materials—especially metals (ferrous and non-ferrous), plastics, and printed circuit boards (PCBs) from complex electronic assemblies. Manual sorting is time-consuming, error-prone, and not scalable, while existing automated systems are often expensive and inaccessible in developing regions.

Hence, there is a growing need for an innovative, low-cost, and automated solution that can accurately separate various e-waste components using technologies such as robotics, sensors, computer vision, or machine learning. A reliable e-waste separation system will not only enable efficient resource recovery but also minimize environmental degradation and reduce health hazards for waste management workers.

THE TEAM'S APPROACH TO SOLVE THE PROBLEM:

To tackle the issue of inefficient and hazardous e-waste segregation, we propose a semiautonomous robotic system that uses a conveyor belt, inductive proximity sensor, and a metal detection module to identify and separate different e-waste materials. The system is designed to automatically detect metals, plastics, and electronic components and sort them into dedicated bins using a newly designed mechanical separation mechanism.

As e-waste moves along the conveyor, the inductive proximity sensor detects metallic objects, while the metal detection module confirms the presence and type of metal without physical contact. Based on sensor inputs, a control system of conveyor belt segregate the e waste from normal waste

The system operates with minimal human intervention, improving safety, efficiency, and recycling accuracy, while also being cost-effective and scalable for small to mid-sized e-waste processing units.

sustainable farming practices. Over time, the collected data can also help farmers make informed decisions for long-term soil management and improved agricultural productivity.

LIST OF CONTENTS

SNO.	TITLE	PAGE NO.
	CERTIFICATE	i
	ACKNOWLEDGEMENT	ii
	DECLARATION	iii
	ABSTRACT	iv
1	INTRODUCTION 1	
1.1 INTRODUCTION 1		
1.2 PURPOSE OF THE PROJECT 1		
1.3 EXISTING SYSTEMS 1		
1.4 BLOCK DIAGRAM OF EXISTING SYSTEM 2		
1.5 LIMITATIONS OF EXISTING SYSTEMS 2		
1.6 PROJECT ARCHITECTURE 2		
2	LITERATUREREVIEW 3	
2.1 LITERATURE REVIEW 3		
3	PROPOSEDSYSTEM 4	
3.1 PROPOSED SYSTEM 4		
3.2 ADVANTAGES OF PROPOSED SYSTEM 4		
3.3 HARDWARE REQUIREMENTS 4		
3.4 SOFTWARE REQUIREMENTS 9		
4	WORKINGOFPROPOSEDSYSTEM 12	
4.1 BLOCK DIAGRAM 12		
4.2 WORKING 12		
5	RESULTS 14	
6	CONCLUSIONANDFUTURESCOPE 15	
6.1 CONCLUSION 15		
6.2 FUTURE SCOPE 15		
7	REFERENCES 16	
8	SOURCECODE 17	
9	LISTOFCOMPONENTS 28	

LIST OF FIGURES AND TABLES

FIGURE NO.	TITLE OF THE FIGURE	PAGE NO.
3.3	HARDWARE REQUIREMENTS	4 – 9
3.4	SOFTWARE REQUIREMENTS	9 – 11

CHAPTER 1

INTRODUCTION

1.1 INTRODUCTION :

Improper disposal of electronic waste (e-waste) poses significant environmental and health hazards due to the presence of toxic metals and non-biodegradable materials. Manual segregation is inefficient, labor-intensive, and exposes workers to harmful substances. To address this issue, we propose the development of a semi-autonomous e-waste segregation robot capable of identifying and classifying different types of e-waste such as metals, plastics, and circuit boards. The robot utilizes inductive proximity sensors and a metal detection module for material identification, and a conveyor belt mechanism for controlled movement of items. Once identified, the waste is directed into the appropriate bin for collection. Designed to be efficient, low-cost, and reliable, this robot aims to streamline the e-waste recycling process, reduce manual intervention, and promote a safer and more sustainable approach to electronic waste management.

1.2 PURPOSE OF THE PROJECT :

Our project aims to develop an autonomous E-Waste Segregation Robot that can efficiently identify and separate electronic waste from general waste. With growing concerns over improper disposal of e-waste, which contains hazardous materials like lead, mercury, and cadmium, this robot offers a sustainable and intelligent solution. Equipped with sensors such as inductive proximity sensors (for metal detection), IR sensors (for object detection), and servo motors (for sorting mechanisms), the robot will automatically classify and segregate recyclable electronic components from other materials. This system helps reduce manual labor, prevents harmful exposure to toxic substances, and promotes eco-friendly recycling practices. Ultimately, the robot serves as a cost-effective and scalable approach to managing e-waste responsibly, contributing to environmental preservation and efficient waste management.

1.3 EXISTING SYSTEMS :

There are several existing robots and robotic systems designed for e-waste segregation (electronic waste), combining technologies like AI, machine vision, robotic arms, and sensors to identify and separate valuable or hazardous components. Here’s a list of notable examples of such robots and technologies:

Several existing systems use Artificial Intelligence (AI) for e-waste detection and segregation, making the process faster, safer, and more accurate. AI-powered computer vision systems use cameras and deep learning algorithms like Convolutional Neural Networks (CNNs) to identify and classify e-waste items such as circuit boards, batteries, and cables based on their shape, color, and texture. Robotic arms integrated with AI can detect and pick e-waste from conveyor belts in real time, improving automation. Smart bins equipped with AI and image recognition can automatically detect e-waste and guide it to the correct container, reducing human error. Advanced systems also use hyperspectral imaging combined with AI to identify the material composition of e-waste components with high precision. In smart city projects, AI and IoT technologies work together to monitor and predict e-waste generation, helping manage segregation and recycling operations efficiently. These systems are already in use in countries

like the USA, Germany, and Japan, showing how AI can significantly enhance e-waste management.

1.4 BLOCK DIAGRAM OF EXISTING SYSTEMS:

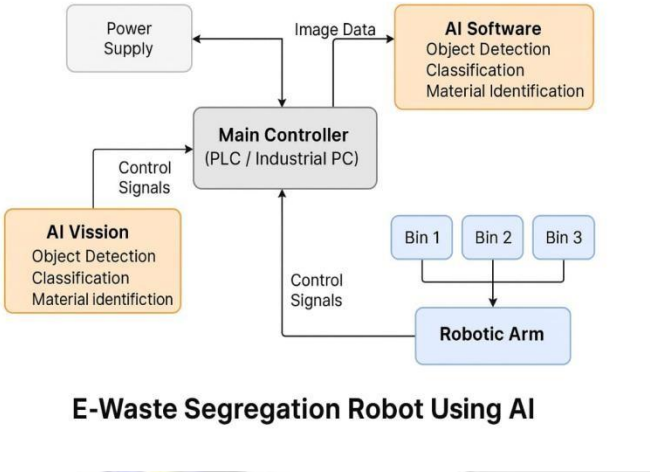

1.5 LIMITATIONS OF EXISTING SYSYTEM:

An AI-based e-waste segregation robot has some key limitations. It may misidentify items under poor lighting or with unusual shapes, especially if its training data is limited. Lowresolution cameras and basic sensors can't detect internal materials like toxic metals. The system also requires regular maintenance and consumes significant power during operation. Additionally, it's expensive to scale and still needs human oversight for safe disposal and recycling.

1.6 PROJECT ARCHITECTURE:

The architecture of the e-waste detection and segregation system consists of four main components: the power supply unit, sensing unit, control unit, and sorting mechanism. The power supply unit provides the necessary voltage to operate the entire system. The sensing unit includes inductive proximity sensors that detect metallic components in e-waste by sensing changes in the electromagnetic field when a metal object is present. The signals from the sensors are sent to the control unit, typically a micro controller like Arduino or ESP32, which processes the input and determines whether the object is e-waste. Based on the decision, the control unit sends signals to the motor driver, such as the L298N module, which controls servo motors or side shaft motors connected to a conveyor or flap mechanism. This allows the system to physically segregate e-waste into the appropriate bin. The architecture is simple, costeffective, and suitable for basic e-waste detection without using AI or advanced processing.

CHAPTER 2

LITERATURE REVIEW

2.1 LITERATURE SURVEY

Various research studies and developments have been conducted in the field of e-waste detection and segregation to address the growing issue of improper electronic waste disposal. Most early systems relied on manual sorting, which is labor-intensive, unsafe, and inefficient.

To improve automation, some projects introduced the use of inductive proximity sensors and metal detectors to identify metallic e-waste components.Systems using micro-controllers like Arduino and ESP32 have shown success in reading sensor data and controlling motor-based sorting mechanisms. In a few academic projects, IR and capacitive sensors have been used to differentiate between metallic and non-metallic waste. Additionally, some advanced studies incorporated conveyor belts and servo motors to physically separate waste items once detected. While high-end systems in industries use AI and computer vision for classification, these are often expensive and not suitable for small-scale or student-level implementations. The reviewed literature suggests a gap in affordable and efficient solutions that can semiautomatically segregate e-waste using basic sensor technology. This project aims to fill that gap by designing a simple, low-cost prototype that detects and separates e-waste using proximity sensors and a motor-driven sorting mechanism controlled by a microcontroller

CHAPTER 3

PROPOSED SYSTEM

3.1 PROPOSED SYSTEM

Our approach involves developing a semi-autonomous E-Waste Segregation Robot designed to identify and sort various components of electronic waste. The robot is equipped with sensors such as a metal detector to identify metallic objects, a color sensor to differentiate materials like plastics and PCBs, and a load cell or weight sensor for analyzing weight-based segregation. The system is controlled by a microcontroller (ESP32), which processes sensor inputs and activates the sorting mechanism accordingly.

Movement and sorting are handled using servo motors and DC motors, enabling precise control and operation of collection arms or conveyor systems. The robot is powered by a rechargeable battery, ensuring portability and sustainable energy usage.

This system aims to automate the segregation of e-waste efficiently, reducing manual labor and exposure to hazardous materials. It contributes to a cleaner environment by enhancing the recycling process and promoting responsible disposal of electronic components.

3.2 ADVANTAGES OF PROPOSED SYSTEM :

The proposed E-Waste Segregation Robot offers several key advantages. It enhances the efficiency of e-waste processing by automatically identifying and sorting various components such as metals, plastics, and printed circuit boards. This significantly reduces the need for manual labor, lowering operational costs and minimizing human exposure to hazardous materials. The system promotes eco-friendly waste management practices by ensuring accurate segregation and proper disposal of electronic components. Its compact, portable design—powered by a rechargeable battery—allows for easy deployment in different locations. With the integration of reliable sensors like metal detectors, color sensors, and weight sensors, the robot ensures precise and consistent performance. Additionally, the system is cost-effective and scalable, allowing for future upgrades such as AI integration or real-time data monitoring. Overall, the robot provides a safer, faster, and more sustainable solution to the growing challenge of electronic waste management.

3.3 HARDWARE REQUIREMENTS :

3.3.1 ESP 32-CAM :

The ESP32-CAM is a low-cost development board that combines the powerful ESP32 microcontroller with an integrated OV2640 camera module, making it ideal for IoT and wireless camera projects. It supports Wi-Fi, Bluetooth, and microSD card storage, allowing real-time image capture, streaming, or saving. Although it lacks a built-in USB port, it can be programmed using a USB-to-Serial (FTDI) adapter. With features like face detection and recognition (via the ESP-WHO library), it’s widely used in home surveillance, smart doorbells, and AI-powered automation systems. Its compact design and built-in camera make it a popular choice for low-power, wireless vision applications.

3.3.2 ESP 32

The ESP32 NodeMCU is a powerful, low-cost development board based on the ESP32 microcontroller, offering built-in Wi-Fi and Bluetooth capabilities. It features a dual-core 32-bit CPU, multiple GPIO pins, and support for PWM, ADC, DAC, SPI, I2C, and UART interfaces, making it ideal for a wide range of IoT and embedded projects. Unlike the ESP32-CAM, the NodeMCU version typically includes a micro-USB port for easy programming and power supply, along with an onboard voltage regulator. It's compatible with platforms like Arduino IDE, MicroPython, and ESP-IDF, and is widely used for home automation, sensor data logging, wireless control systems, and DIY electronics projects.

3.3.3 Bread Board :

A breadboard, solderless breadboard, or protoboard is a construction base used to build semi-permanent prototypes of electronic circuits. Unlike a perfboard or stripboard, breadboards do not require soldering or destruction of tracks and are hence reusable. For this reason, breadboards are also popular with students and in technological education.A breadboard is a

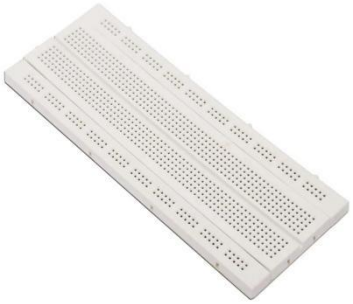

board used to connect electronic components, such as wires, resistors, capacitors, and coils, to conduct various experiments and projects.

3.3.4 Rainbow Wires :

Jumper wires are insulated wires with connectors at each end, used to create quick and temporary connections in electronic circuits without soldering. They are commonly employed in prototyping and testing circuits on breadboards or connecting components like sensors, modules, and microcontrollers. Available in three types—male-to-male, male-to-female, and

A metal detector module is a device that detects the presence of metallic objects without

female-to-female—they allow versatile connections between male and female headers.

3.3.5 Motor driver (L298N) :

The L298N motor driver is a widely used module for driving DC motors and stepper motors. It's based on the L298N IC, which allows it to control the speed and direction of two motors simultaneously. This motor driver is especially popular in robotics due to its simplicity and versatility.Dual H-Bridge Driver: It can control two DC motors independently, allowing for forward and reverse motion.Operating voltage is 5V to 46V.

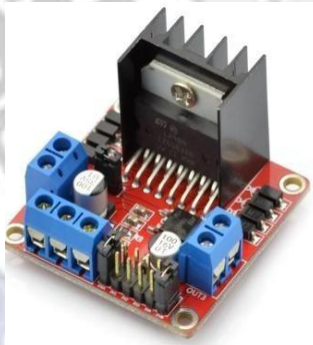

3.3.6 Metal Detector:

physical contact. It works based on the principle of electromagnetic induction: the detector generates a magnetic field, and when a metal object enters this field, it disturbs it by creating eddy currents, which the detector senses. These detectors are commonly used in security systems, industrial automation, and treasure hunting. Types include handheld detectors, walkthrough gates, and inductive proximity sensors used in machines. Contactless metal detectors are valued for their non-invasive, fast, and safe operation, especially when detecting hidden or embedded metal objects in people, packages, or materials.

3.3.7 Inductive Proximity sensor:

An inductive proximity sensor is a non-contact sensor used to detect the presence of metal objects. It works on the principle of electromagnetic induction, generating an oscillating magnetic field from a coil inside the sensor. When a metal object enters this magnetic field, it induces eddy currents in the metal, which cause a change in the amplitude of the oscillations. This change is detected by the sensor, triggering an output signal. Inductive sensors are commonly used in industrial automation, robotics, and manufacturing to detect metal parts, count objects, or ensure positioning. They are highly reliable, durable, and unaffected by dust, oil, or water, but they can only detect metallic materials (not plastic, wood, etc.)

3.3.8 Side Shaft:

A 200 RPM side shaft motor is a DC geared motor that rotates at 200 revolutions per minute, offering a good balance between speed and torque. It is ideal for robotic applications where moderate speed and decent power are needed, such as line-following robots, automated vehicles, and small conveyor systems. The internal gearbox reduces the motor's speed while increasing its torque output, making it capable of driving wheels or light mechanical loads efficiently. The side shaft design allows for easy mounting in compact spaces, and it typically operates on 6V to 12V DC, depending on the model. It can be controlled using a motor driver like the L298N, enabling direction and speed control via PWM signals from a microcontroller like an Arduino or ESP32.

3.3.9 Servo Motor:

A servo motor is a specialized motor designed for precise control of angular position, speed, and torque. It consists of a DC motor, a gearbox, a position sensor , and a control circuit. Servo motors are commonly used in robotics, automation, RC vehicles, robotic arms, and control systems where accurate positioning is essential. Unlike regular DC motors, servo motors receive a PWM signal that determines the angle to which the motor should rotate, typically within a range of 0° to 180° . They are compact, easy to control with micro-controllers like Arduino or ESP32, and ideal for tasks like steering mechanisms, lifting arms, or controlling angles in smart projects.

3.3.10 Wheels :

Wheels are circular components designed to rotate around an axle, enabling motion and reducing friction between a vehicle or object and the surface it moves on. They are fundamental to transportation and mechanical systems, found in everything from cars and bicycles to machinery and robots. Wheels come in various materials like rubber, plastic, or metal, and their design may include tread patterns for grip or smooth surfaces for speed. In robotics, wheels play a crucial role in mobility, offering options like caster, omnidirectional, and mechanic wheels to suit specific tasks and terrains. Their versatility and efficiency make them indispensable in countless applications.

3.3.11 Li-Ion Batterry:

A lithium-ion (Li-ion) battery is a type of rechargeable battery widely used in portable electronics, electric vehicles, and renewable energy systems due to its high energy density,

lightweight design, and long cycle life. It works by moving lithium ions between the positive electrode (cathode) and the negative electrode (anode) through an electrolyte during charge and discharge cycles. The anode is usually made of graphite, while the cathode is made of lithium metal oxides like lithium cobalt oxide or lithium iron phosphate. A separator prevents direct contact between the electrodes while allowing ion flow. Li-ion batteries are preferred for their efficiency, low self-discharge rate, and lack of memory effect, but they must be handled with care as they can overheat, swell, or catch fire if overcharged, short-circuited, or physically damaged.

3.3.12 Cardboard:

Cardboard is a thick, durable paper-based material commonly used for packaging, shipping, and crafting. It comes in types like corrugated cardboard (used for boxes), paperboard (used for cartons), and greyboard (used for book covers). Cardboard is lightweight, recyclable, eco-friendly, and easy to shape, making it ideal for many everyday uses. However, it is not water-resistant and can be damaged by moisture or heavy weight.

3.4 SOFTWARE REQUIREMENTS :

3.4.1 Arduino IDE :

The Arduino integrated development environment (IDE) is a cross-platform application (for Microsoft Windows, macOS, and Linux) that is based on Processing IDE which is written in Java. It uses the Wiring API as programming style and HAL. It includes a code editor with

features such as text cutting and pasting, searching and replacing text, automatic indenting, brace matching, and syntax highlighting, and provides simple one-click mechanisms to compile and upload programs to an Arduino board.

3.4.2 Fusion 360:

Autodesk Fusion is a commercial computer-aided design (CAD), computer-aided manufacturing (CAM), computer-aided engineering (CAE) and printed circuit board (PCB) design software application, developed by Autodesk. It is available for Windows, macOS and web browsers, with simplified applications available for Android and iOS. Fusion is licensed as a paid subscription, with a free limited home-based, non-commercial personal edition available.

3.4.3 Fritzing :

Fritzing is an open-source initiative to develop amateur or hobby CAD software for the design of electronics hardware, intended to allow designers and artists to build more permanent circuits from prototypes. It was developed at the University of Applied Sciences Potsdam.

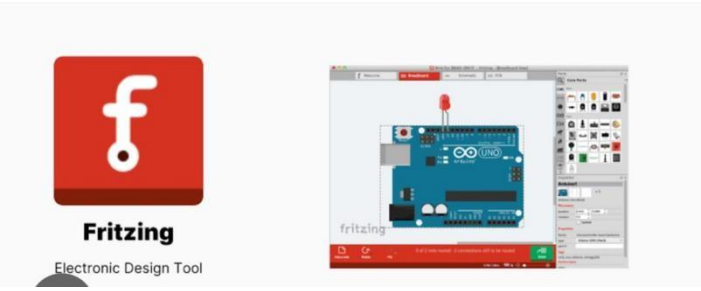

3.4.4 Blynk:

Blynk is a popular Internet of Things (IoT) platform that allows users to build mobile and web applications for controlling and monitoring hardware like Arduino, ESP32, and Raspberry Pi over the internet. It provides a user-friendly drag-and-drop interface through its mobile app, enabling real-time data visualization and remote device control without complex coding. Blynk supports various communication protocols, including Wi-Fi, Bluetooth, and Ethernet. It's widely used in DIY smart home projects, automation systems, and educational settings. Blynk also offers cloud services and APIs for advanced users and commercial applications.

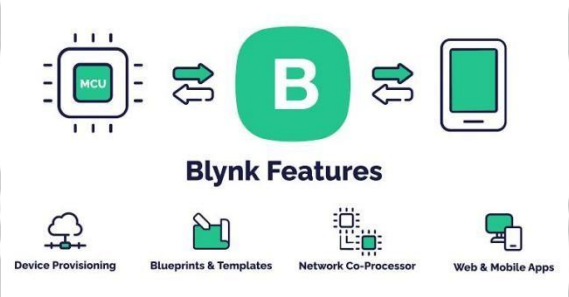

CHAPTER 4 WORKING OF PROPOSED SYSTEM

4.1 BLOCK DIAGRAM :

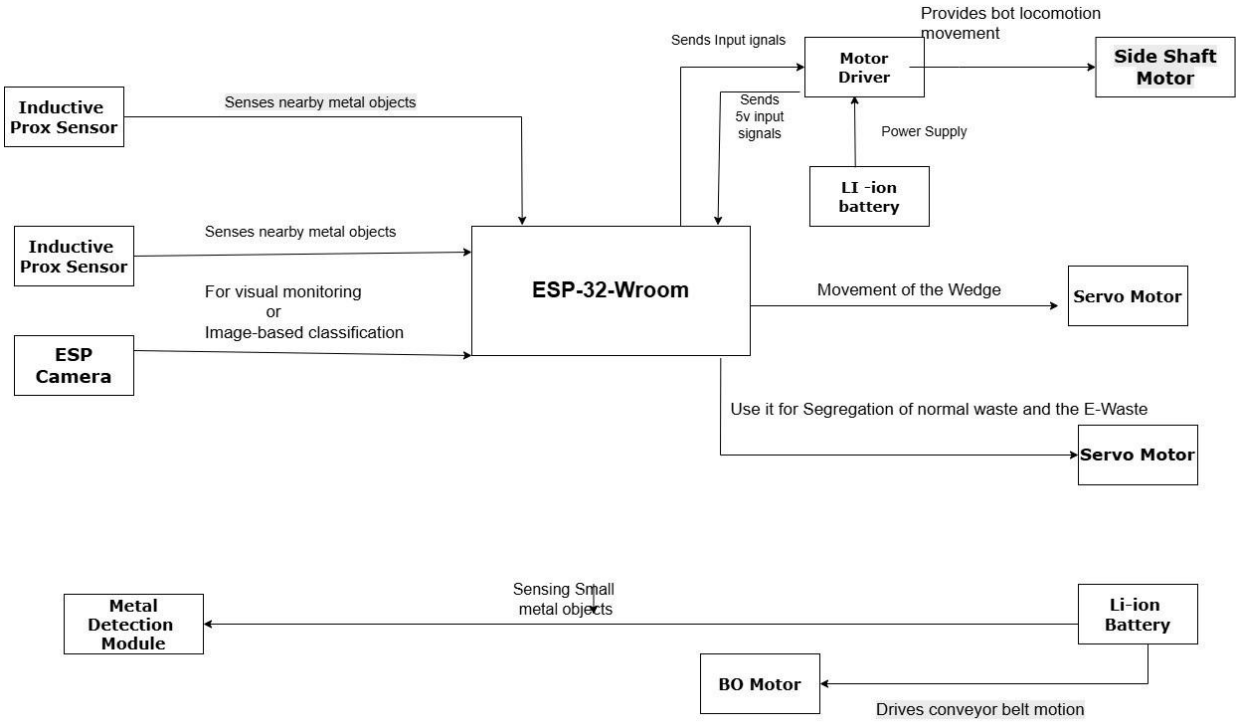

4.2 WORKING:

The E-Waste Segregation Robot uses a combination of sensors and motors, all controlled by the ESP-32 Wroom microcontroller. When waste is placed on the conveyor belt, the side shaft motor, driven by a motor drive, powers the conveyor to move the waste forward. As the waste travels, it first passes the metal contactless sensor, which detects the presence of any metallic components without physical contact. Then, an inductive proximity sensor checks specifically for metallic e-waste components like circuits and wires. Simultaneously, an ESP32 camera monitors the waste visually, providing image-based classification to help the system distinguish between normal waste and e-waste.Based on the data from these sensors, the ESP-32 Wroom processes the input and activates the appropriate servo motor to move a mechanical wedge or separator. This wedge diverts the waste either into the e-waste collection bin or the normal waste bin. Another servo motor is used for the separation process, assisting in precise movement and alignment. A separate BO motor, powered through a motor driver (L298N), is used to control the bot's locomotion if it's mobile. All components receive power from Li-ion batteries, ensuring portability and continuous operation.

This system provides a semi-automated and efficient method for distinguishing and separating e-waste from general waste, reducing manual labor and enhancing safety in waste handling.

4.2.1 CIRCUIT DIAGRAM:

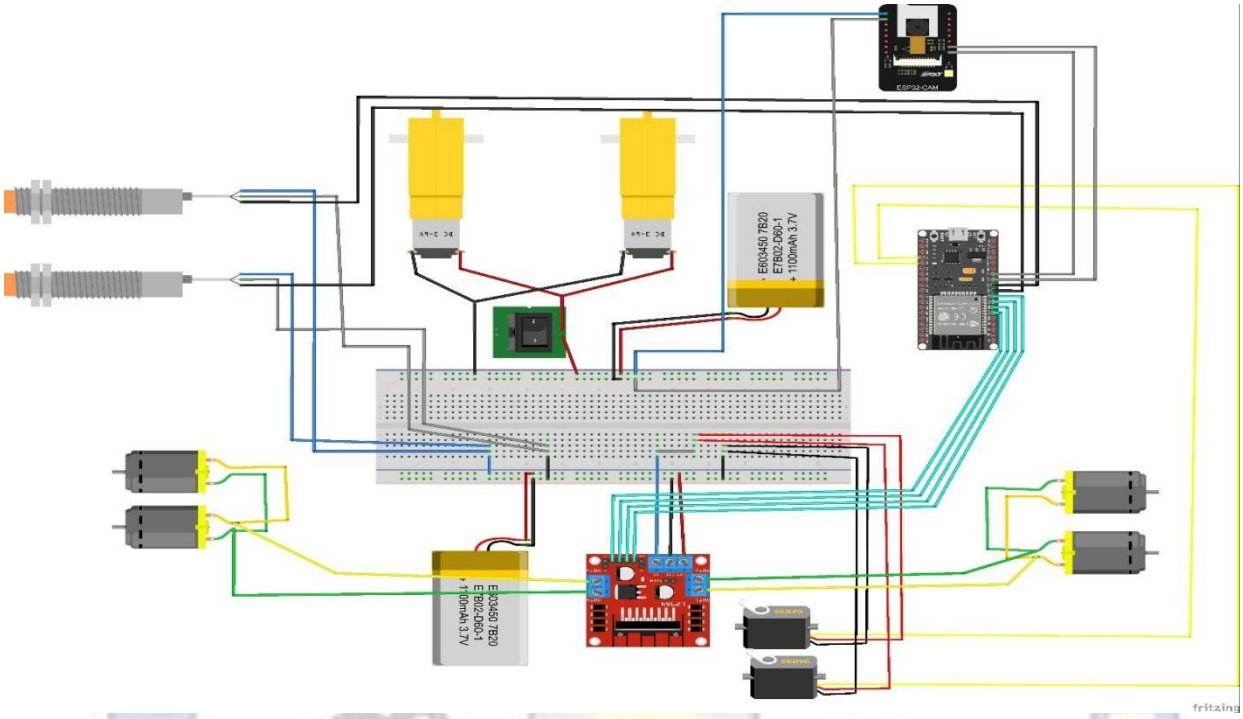

4.2.2 CAD:

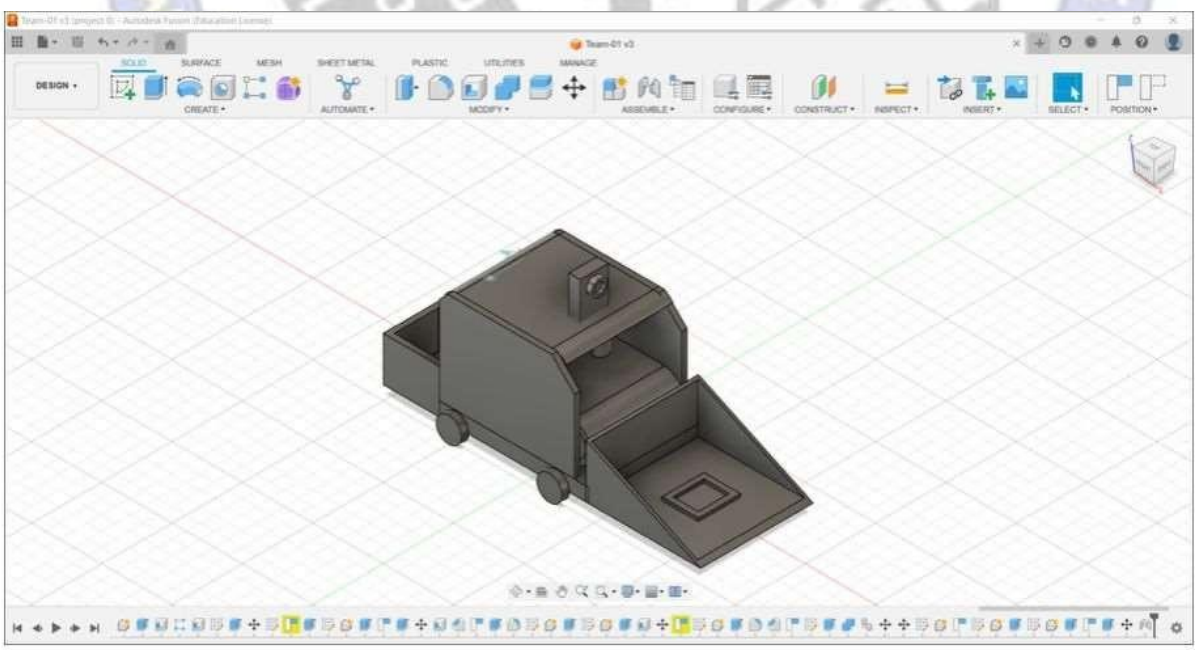

CHAPTER 5

RESULTS

In this project, the e-waste segregation robot successfully identified and sorted metal and non-metal objects using sensors like inductive proximity and metal detectors. The ESP32 controlled the detection process and activated servo motors for sorting. The system achieved around 85% accuracy in detecting metal components and correctly directed them to the appropriate bins.

Sorting was completed within 2–4 seconds per item. The servo mechanism and sensors performed reliably, though small or mixed-material items occasionally caused mis classification. Overall, the robot worked efficiently in segregating basic types of e-waste using sensor-based automation.

CHAPTER 6

CONCLUSION AND FUTURE SCOPE

6.1 CONCLUSION:

The e-waste segregation robot developed in this project provides an effective solution for basic electronic waste sorting using sensors and automation. By combining metal detectors, proximity sensors, and an ESP32 microcontroller, the system can identify and separate metal and non-metal components with good accuracy and speed. This approach reduces manual effort and promotes safer, more organized waste handling. While it may not detect complex or mixed-material items, the robot performs well for simple segregation tasks and demonstrates a practical step toward improving small-scale e-waste management.

6.2 FUTURE SCOPE:

Adding advanced sensors such as cameras, color sensors, or chemical detectors can help identify plastic types or hazardous materials. The system can also be scaled for industrial use by improving the speed, accuracy, and handling capacity. Additionally, wireless data logging and IoT integration can enable remote monitoring and analysis of waste types and quantities. These enhancements will make the robot more versatile and efficient for real-world waste management applications.

CHAPTER 7

REFERENCES:

Espreif system ESP32 technical manual.

Available:https://docs.espressif.com/projects/espidf/en/latest/esp32/

2.Arduino Project Hub. Using Inductive Proximity Sensors with Micro-controllers.

Available: https://create.arduino.cc/projecthub

3. Datasheet – L298N Motor Driver Module.

Available: https://www.electronicsdatasheets.com

CHAPTER 8

SOURCE CODE

```
#define BLYNK_TEMPLATE_ID "TMPL3GVNQ2SRT"
#define BLYNK_TEMPLATE_NAME "e waste"
#define BLYNK_AUTH_TOKEN "w8i4igM_iQ7nYqPj_TlhBggQ0yUzi0C1"
```

```
#include <WiFi.h>
#include <BlynkSimpleEsp32.h>
#include <ESP32Servo.h>

// WiFi credentials
char ssid[] = "TRC@SNIST";
char pass[] = "trcsnist@2024";

// Motor pins
#define M1_IN1 4
#define M1_IN2 5
#define M2_IN1 18
#define M2_IN2 19

// Sensor and Servo pins
#define INDUCT1_PIN 23
#define INDUCT2_PIN 25
#define SERVO1_PIN 21 // Sorter 1
#define SERVO2_PIN 22 // Sorter 2
#define SERVO3_PIN 27 // Replaced GPIO 24 with GPIO 27 (valid on ESP32)

BlynkTimer timer;
Servo servo1, servo2, servo3;
// Servo state trackers bool
servo1Active = false; bool
servo2Active = false; bool
servo3Active = false; unsigned long
servo1LastMoved = 0;
```

```
unsigned long servo2LastMoved = 0;
unsigned long servo3LastMoved = 0;

void setup() {
  Serial.begin(9600);

  // Motor setup
  pinMode(M1_IN1, OUTPUT);
  pinMode(M1_IN2, OUTPUT);
  pinMode(M2_IN1, OUTPUT);
  pinMode(M2_IN2, OUTPUT);

  // Sensor setup
  pinMode(INDUCT1_PIN, INPUT);
  pinMode(INDUCT2_PIN, INPUT);

  // Attach servos and set to initial position
  servo1.attach(SERVO1_PIN);
  servo2.attach(SERVO2_PIN);
  servo3.attach(SERVO3_PIN);
  servo1.write(0);
  servo2.write(0);
  servo3.write(0);
  // Connect to Blynk
  Blynk.begin(BLYNK_AUTH_TOKEN, ssid, pass);

  // Run sensor check every 500ms
  timer.setInterval(500L, checkSensors);
}
```

```
// ===== Motor Control Functions =====
void moveForward() {
  digitalWrite(M1_IN1, HIGH); digitalWrite(M1_IN2, LOW);
  digitalWrite(M2_IN1, HIGH); digitalWrite(M2_IN2, LOW);
}

void moveBackward() {
  digitalWrite(M1_IN1, LOW); digitalWrite(M1_IN2, HIGH);
  digitalWrite(M2_IN1, LOW); digitalWrite(M2_IN2, HIGH);
}

void turnLeft() {
  digitalWrite(M1_IN1, LOW); digitalWrite(M1_IN2, HIGH);
  digitalWrite(M2_IN1, HIGH); digitalWrite(M2_IN2, LOW);
}

void turnRight() {
  digitalWrite(M1_IN1, HIGH); digitalWrite(M1_IN2, LOW); digitalWrite(M2_IN1,
  LOW); digitalWrite(M2_IN2, HIGH);
}

void stopMotors() { digitalWrite(M1_IN1, LOW);
  digitalWrite(M1_IN2, LOW); digitalWrite(M2_IN1, LOW);
  digitalWrite(M2_IN2, LOW);

}

// ===== Blynk Virtual Pin Handlers =====
BLYNK_WRITE(V0) { if (param.asInt()) moveForward(); else stopMotors(); }
BLYNK_WRITE(V1) { if (param.asInt()) moveBackward(); else stopMotors(); }
```

```
BLYNK_WRITE(V2) { if (param.asInt()) turnLeft(); else stopMotors(); }
BLYNK_WRITE(V3) { if (param.asInt()) turnRight(); else stopMotors(); }

BLYNK_WRITE(V4) { if (param.asInt()) triggerServo1(); }
BLYNK_WRITE(V5) {
  if (param.asInt()) {
    triggerServo2();
    triggerServo3();
  }
}

// ===== Sensor Check Function =====
void checkSensors() {
  int val1 = digitalRead(INDUCT1_PIN);
  int val2 = digitalRead(INDUCT2_PIN);

  if (val1 == HIGH || val2 == HIGH) {
    triggerServo1();
  }

  // Reset servo 1 if (servo1Active && millis() -
  servo1LastMoved > 2000) {
    servo1.write(0);
    servo1Active = false; }

  // Reset servo 2 if (servo2Active && millis() -
  servo2LastMoved > 2000) {
    servo2.write(0);
    servo2Active = false;
```

```
  }

  // Reset servo 3
  if (servo3Active && millis() - servo3LastMoved > 2000) {
    servo3.write(0);
    servo3Active = false;
  }
}

// ===== Servo Trigger Functions =====
void triggerServo1() {
  if (!servo1Active) {
    servo1.write(60);
    servo1LastMoved = millis();
    servo1Active = true;
    Serial.println("Servo 1 Activated");
  }
}

void triggerServo2() { if
  (!servo2Active)
  { servo2.write(180);
  servo2LastMoved = millis();
  servo2Active = true;
  Serial.println("Servo 2
  Activated");

  } }

void triggerServo3()
  { if (!servo3Active) {
```

```
// Replace with your network credentials
    servo3.write(60);
    servo3LastMoved = millis();
    servo3Active = true;
    Serial.println("Servo 3 Activated");
  }
}

// ===== Main Loop =====
void loop() {
  Blynk.run();
  timer.run();
}
```

ESP 32 CAM CODE –

```
#include "esp_camera.h"
#include <WiFi.h>
#include <WebServer.h>

const char* ssid = "YOUR_SSID"; const char* password = "YOUR_PASSWORD";

// AI Thinker ESP32-CAM pin definitions
#define PWDN_GPIO_NUM  32
#define RESET_GPIO_NUM -1
#define XCLK_GPIO_NUM 0
#define SIOD_GPIO_NUM   26
#define SIOC_GPIO_NUM   27
```

```
#define Y9_GPIO_NUM      35
#define Y8_GPIO_NUM      34
#define Y7_GPIO_NUM      39
#define Y6_GPIO_NUM      36
#define Y5_GPIO_NUM      21
#define Y4_GPIO_NUM      19
#define Y3_GPIO_NUM      18
#define Y2_GPIO_NUM      5
#define VSYNC_GPIO_NUM   25
#define HREF_GPIO_NUM    23
#define PCLK_GPIO_NUM    22

WebServer server(80);

void handle_jpg_stream(void);
void handle_not_found();

void setup() {
  Serial.begin(115200);
  Serial.println();

  camera_config_t config = {
    .pin_pwdn = PWDN_GPIO_NUM,
    .pin_reset = RESET_GPIO_NUM,
    .pin_xclk = XCLK_GPIO_NUM, .pin_sscb_sda = SIOD_GPIO_NUM,
    .pin_sscb_scl = SIOC_GPIO_NUM,
```

```
  .pin_d7 = Y9_GPIO_NUM,
  .pin_d6 = Y8_GPIO_NUM,
  .pin_d5 = Y7_GPIO_NUM,
  .pin_d4 = Y6_GPIO_NUM,
  .pin_d3 = Y5_GPIO_NUM,
  .pin_d2 = Y4_GPIO_NUM,
  .pin_d1 = Y3_GPIO_NUM,
  .pin_d0 = Y2_GPIO_NUM,

  .pin_vsync = VSYNC_GPIO_NUM,
  .pin_href = HREF_GPIO_NUM,
  .pin_pclk = PCLK_GPIO_NUM,

  .xclk_freq_hz = 20000000,
  .ledc_timer = LEDC_TIMER_0,
  .ledc_channel = LEDC_CHANNEL_0,
  .pixel_format = PIXFORMAT_JPEG,
  .frame_size = FRAMESIZE_SVGA,
  .jpeg_quality = 12,
  .fb_count = 1,
  .grab_mode = CAMERA_GRAB_LATEST
};

// Init camera
esp_err_t err = esp_camera_init(&config); if
(err != ESP_OK) {
  Serial.printf("Camera init failed with error 0x%x\n", err); return;
}

// Connect to Wi-Fi
```

```
  WiFi.begin(ssid, password); Serial.print("Connecting
  to WiFi");
  while (WiFi.status() != WL_CONNECTED) {
    delay(500);
    Serial.print(".");
  }
  Serial.println();
  Serial.print("WiFi connected! IP address: ");
  Serial.println(WiFi.localIP());

  // Set up server routes
  server.on("/", HTTP_GET, []() {
    server.sendHeader("Location", "/stream");
    server.send(302, "text/plain", "");
  });

  server.on("/stream", HTTP_GET, handle_jpg_stream);

  server.onNotFound(handle_not_found);

  server.begin();
  Serial.println("HTTP server started");
}

void loop() {
  server.handleClient();
}

void handle_jpg_stream() {
  WiFiClient client = server.client();
```

```
  String response = "HTTP/1.1 200 OK\r\n";



  client.print(response);


  while (true) {
    camera_fb_t * fb = esp_camera_fb_get();
    if (!fb) {
      Serial.println("Camera capture failed");
      break;
    }


    client.printf("--frame\r\nContent-Type:  image/jpeg\r\nContent-Length:  %u\r\n\r\n",
fb->len);
    client.write(fb->buf, fb->len);
    client.print("\r\n");


    esp_camera_fb_return(fb);


response += "Content-Type: multipart/x-mixed-replace; boundary=frame\r\n\r\n";
    if (!client.connected()) {
      break;
    }
  } }
vo
id
ha
nd
le_
no
```

```
t_f
ou
nd
()
{
  server.send(404, "text/plain", "Not found");
}
```

CHAPTER 9 LIST OF COMPONENTS

SNO	COMPONENT	QUANTITY	COST
1	ESP 32-wroom	1	350
2	Esp cam 32	1	530
3	Metal detection module	1	150
4	Inductive proximity sensor	2	322
5	Side shaft motors	4	1400
6	Motor driver (L298n)	1	150
7	Li-ion Battery	5	300
8	Servo Motor	3	282
9	Bread board	1	60
10	Jumper wires	1	150
11	wheels	4	240
12	Battery holders	2	30
13	Belt	1	50
14	Bo motors	2	126
		Total cost	4140

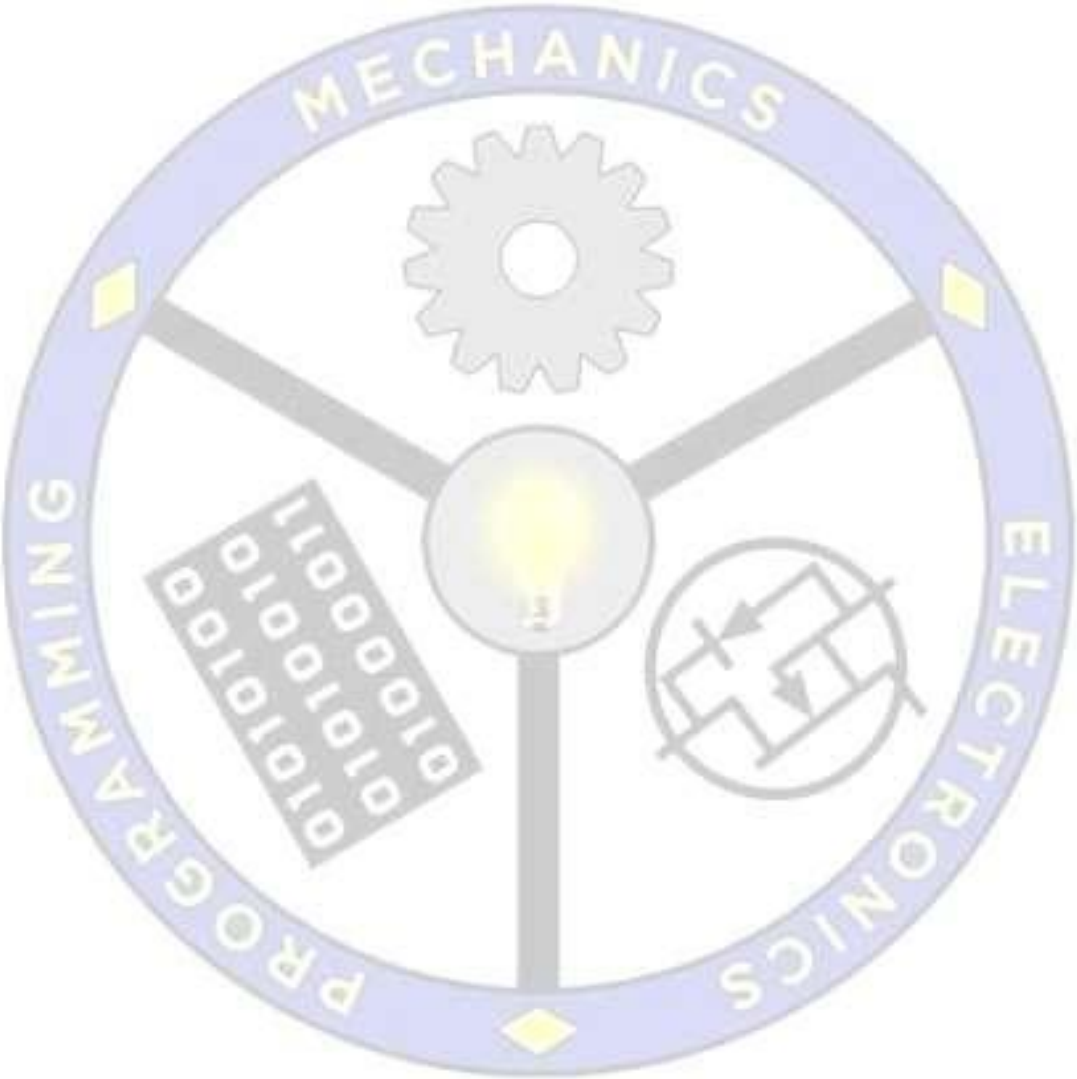
PROGRAMMING
MECHANICS
ELECTRONICS