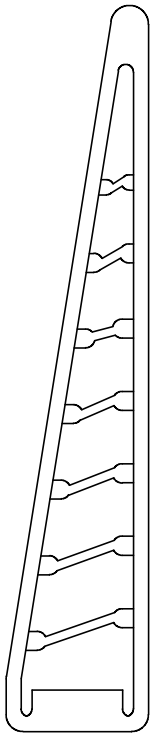

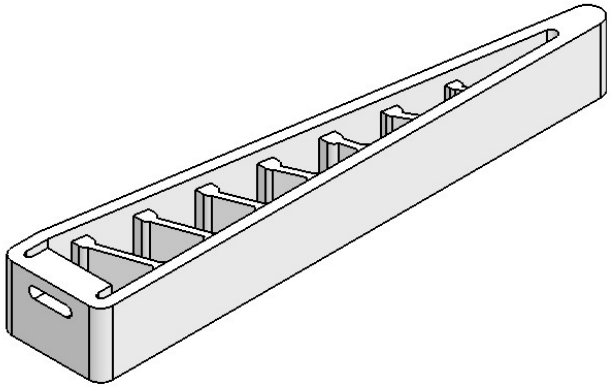

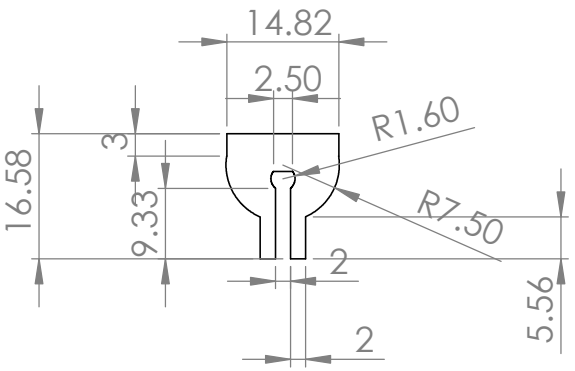

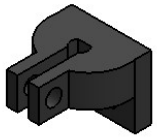

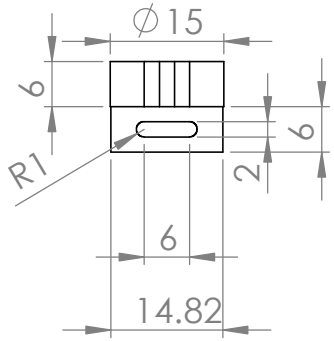

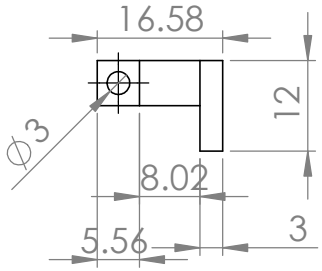

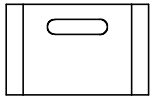

DO NOT SCALE DRAWING	REVISION
	Date: 1/12/2018

TITLE:

Finger & Coupling

DWG NO.	A4
3.4.3	
SCALE:	SHEET 1 OF 4