Title: Design of a Frequency Detector based on 1 kHz Band-Pass Filter using LM324

RV College of Engineering®

Abhinav Racha Battuni | Daksh Reddy | D. Swanith

1RV24EC006 | 1RV24EC058| 1RV24EC057

Department of Electronics and Communication Engineering

RV College of Engineering, Bangalore - 560059, INDIA

Go, change the world

Objectives:

- Design a 1 kHz band-pass filter using LM324
- Detect signals only between 960–1060 Hz
- Drive an LED based on frequency selectivity
- Validate through simulation and PCB design

Methodology:

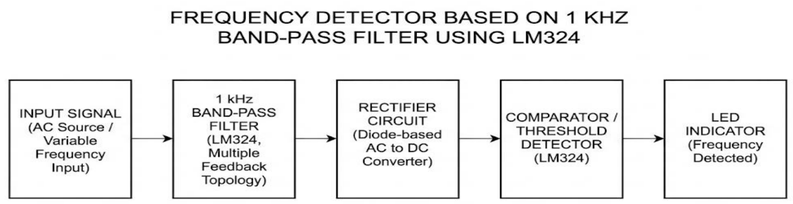

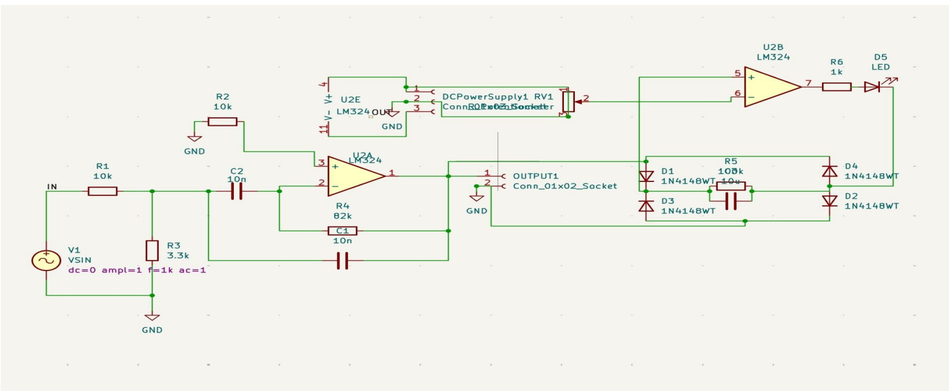

Design Equations:

1. Band-Pass Filter (Multiple Feedback – MFB)

Center / Resonant Frequency

$$f_0 = \frac{1}{2\pi\sqrt{R_3 R_4 C_1 C_2}}$$

If $C_1 = C_2 = C$:

$$f_0 = \frac{1}{2\pi C\sqrt{R_3 R_4}}$$

Quality Factor

$$Q = \frac{\sqrt{R_3 R_4 C_1 C_2}}{R_1 C_2}$$

Bandwidth

$$BW = \frac{f_0}{Q}$$

Lower and Upper Cut-off Frequencies

$$f_L = f_0 - \frac{BW}{2}$$

$$f_H = f_0 + \frac{BW}{2}$$

Mid-band Voltage Gain

$$A_v = \frac{R_4}{2R_1}$$

2. Rectifier and Envelope Detector

Peak DC Output Voltage

$$V_{DC} \approx V_{peak} - 2V_D$$

Where:

$$V_D \approx 0.7\,V \quad \text{(silicon diode)}$$

Ripple Voltage

$$V_{ripple} = \frac{V_{DC}}{f_{in} R_5 C}$$

Time Constant of Envelope Detector

$$\tau = R_5 \times C$$

3. Comparator (Threshold Detector)

Reference Voltage (Potentiometer)

$$V_{ref} = V_{CC} \times \frac{R_{lower}}{R_{upper} + R_{lower}}$$

Comparator Switching Condition

$$V_{DC} > V_{ref} \Rightarrow \text{Output HIGH}$$

$$V_{DC} < V_{ref} \Rightarrow \text{Output LOW}$$

4. LED Indicator

LED Current Limiting Equation

$$I_{LED} = \frac{V_{out} - V_{LED}}{R_6}$$

Where:

$$V_{LED} \approx 2\,V$$

5. Frequency Detection Condition (System Level)

$$f_{in} \approx f_0 \Rightarrow V_{DC} \uparrow \Rightarrow LED\ ON$$

$$f_{in} \neq f_0 \Rightarrow V_{DC} \downarrow \Rightarrow LED\ OFF$$

Results:

LTspice simulation results show a distinct peak at approximately 1 kHz, confirming the designed center frequency. Frequencies outside the 960–1060 Hz band are significantly attenuated. The rectified output exceeds the threshold only within the passband, causing the LED to turn ON. This confirms reliable frequency-based detection using analog circuitry.

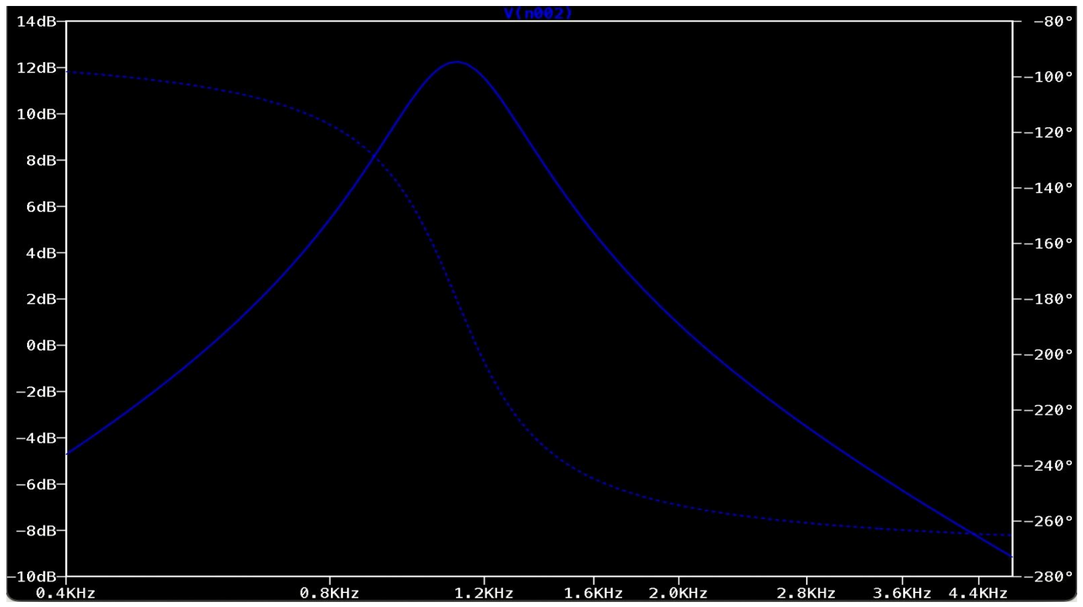

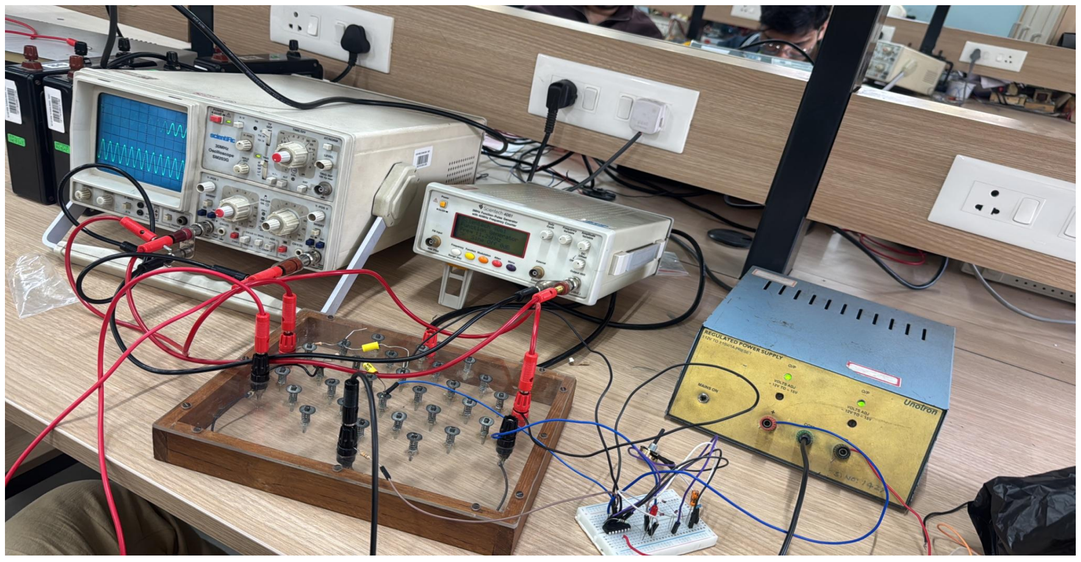

Conclusions:

A compact and cost-effective frequency detector was successfully designed using analog components. The system accurately detects a narrow frequency band around 1 kHz and provides clear visual indication without requiring any digital processing.

Acknowledgements

The authors thank Principal and HoD, Department of Electronics and Communication Engineering, RVCE for the kind support received for completion of the AMC PBL.

Guide Information:

Dr. Srividya P
Assistant Professor