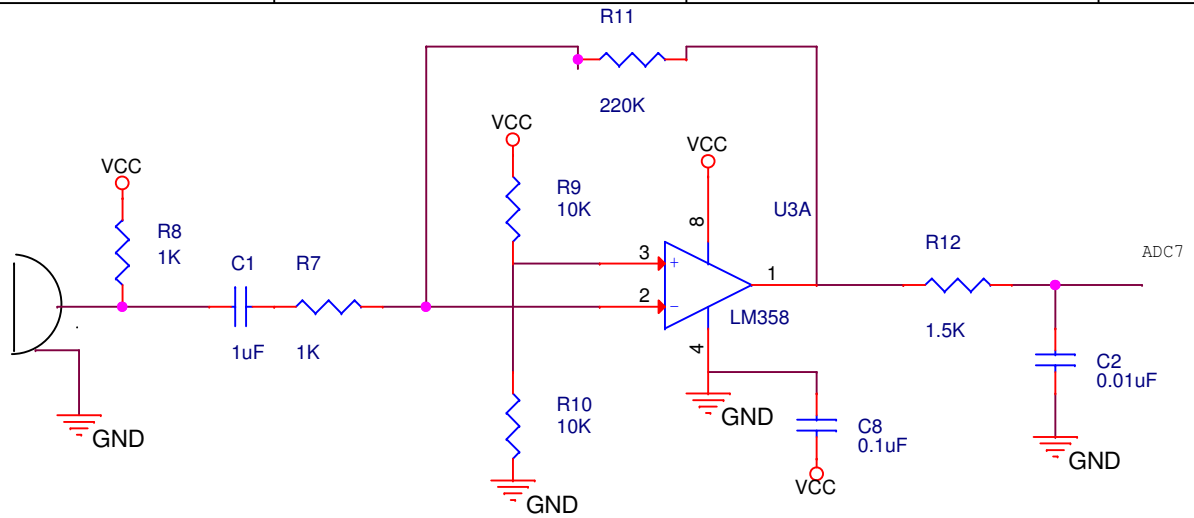
R11
220K
VCC
VCC
VCC
R8
1K
C1
1uF
R7
1K
R9
10K
R10
10K
U3A
LM358
R12
1.5K
ADC7
C2
0.01uF
C8
0.1uF
GND
GND
GND
GND
VCC

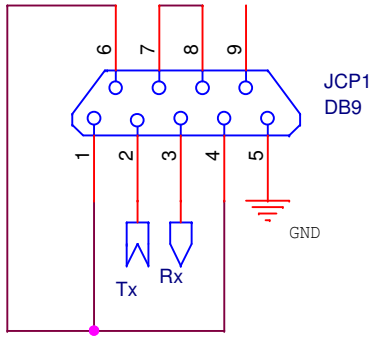
JCP1
DB9
Tx
Rx
GND

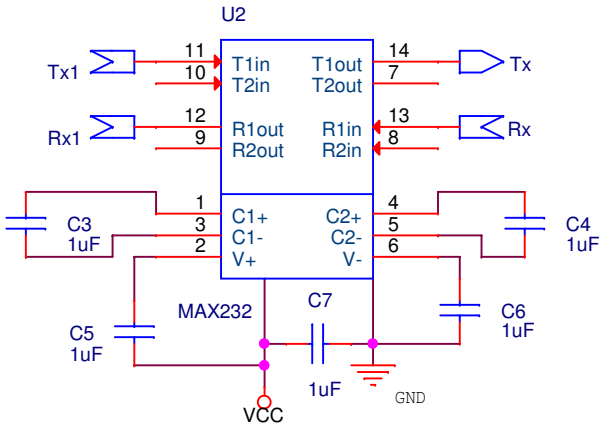
U2
Tx1
Rx1
T1in
T2in
R1out
R2out
T1out
T2out
R1in
R2in
Tx
Rx
C1+
C1-
V+
C2+
C2-
V-
C3
1uF
C4
1uF
C5
1uF
C6
1uF
C7
1uF
MAX232
VCC
GND