nance level with the capability to perform complete repair (i.e., all authorized maintenance functions). This position will contain one of the following maintenance codes:

Code	*Application/Explanation*
O	The lowest maintenance level capable of complete repair of the support item is the Aviation Unit Maintenance (AVUM) level.
F	The lowest maintenance level capable of complete repair of the support item is the Aviation Intermediate Maintenance (AVIM) level.
D	The lowest maintenance level capable of complete repair of the support item is the depot level, performed by depot, mobile depot or specialized repair activity.
L	Repair restricted to designated specialized repair activity.
Z	Nonreparable. No repair is authorized.
B	No repair is authorized. The item may be reconditioned by adjusting, lubricating, etc., at the user level. No parts or special tools are procured for the maintenance of this item.

(3) Recoverability Code. Recoverability codes are assigned to support items to indicate the disposition action on unserviceable items. The recoverability code is entered in the fifth position of the Uniform SMR Code format as follows:

Code	*Definition*
Z	Nonreparable item. When unserviceable, condemn and dispose at the level indicated in position 3.
O	Reparable item. When uneconomically reparable, condemn and dispose at Aviation Unit Maintenance (AVUM) level.
F	Reparable item. When uneconomically reparable, condemn and dispose at Aviation Intermediate Maintenance (AVIM) level.
D	Reparable item. When beyond lower level repair capability, return to depot. Condemnation and disposal not authorized below depot level.
L	Reparable item. Repair, condemnation, and disposal not authorized below depot/specialized repair activity level.
A	Item requires special handling or condemnation procedures because of specific reasons (i.e., precious metal content, high dollar value, critical material or hazardous material). Refer to appropriate manuals/directives for specific instructions.

c. National Stock Number. Indicates the National stock number assigned to the item and will be used for requisitioning purposes.

d. Part Number. Indicates the primary number used by the manufacturer (individual, company, firm, corporation, or Government activity), which controls the design and characteristics of the item by means of its engineering drawings, specifications, standards, and inspection requirements, to identify an item or range of items.

NOTE

When a stock numbered item is requisitioned, the repair part received may have a different part number than the part being replaced.

e. Federal Supply Code for Manufacturer (FSCM). The FSCM is a 5-digit numeric code listed in SB 708-42 which is used to identify the manufacturer, distributor, or Government agency, etc.

f. Description. Indicates the Federal item name and any additional description required to identify the item. This column will also contain the Basis of Issue (BOI) for Special Tools.

g. Unit of Measure (U/M). Indicates the standard of the basic quantity of the listed item as used in performing the actual maintenance function. This measure is expressed by a two-character alphabetical abbreviation (e.g., ea, in, pr, etc.). When the unit of measure differs from the unit of issue, the lowest unit of issue that will satisfy the required units of measure will be requisitioned.

h. Quantity Incorporated in Unit. Indicates the quantity of the item required for one assembly only, including instances when similar assemblies are broken down together. A "V" appearing in this column in lieu of a quantity indicates that no specific quantity is applicable, (e.g., shims, spacers, etc.). When parts are shown as attaching two or more items, the quantity of these parts are those necessary to attach only one of the items.

4. Special Information.

a. The following publications pertain to the ENGINE MODEL T63-A-720 and its components:

Publication and Short Title	
TB 55-1500-307-24	Aircraft Components Requiring Maintenance Management and Historical Data
TM 55-2840-241-23	Aviation Unit and Aviation Intermediate Maintenance Engine Model T63-A-720
TM 55-1500-204-25/1	General Aircraft Maintenance Manual
DMWR 55-2840-242	Depot Maintenance Engine Model T63-A-720

b. Oversize and undersize parts, such as studs, bushings, etc., are listed immediately after the standard size part and in the same indent. The degree of oversize or undersize is stated in the description. These parts will not have a required quantity shown.

c. When an item has been replaced, issue will continue to be made until existing stocks become exhausted except in the case when replacement is limited to one-way use. To insure complete exhaustion of stock on hand and if it is acceptable to use a replaced item, the replaced item should be requisitioned. To denote one- or two-way replacement, mnemonic codes will be used in the description as follows The replaced item(s) will always contain the mnemonic code RPL-BY. The replacing item, if it is a two-way replacement, will contain the mnemonic code RPLS. If it is a one-way replacement, no code will be used. Additional mnemonic codes (para6), are used to reflect the status and relationship of items similar or related items used in the end article (e.g., OBS-BY, ASSYFR, OBS-AFT-CMPL-W).

d. When details of an assembly are shown on another text page, the description of that assembly is followed by a notation stating where these details can be located. "Example: 6876838, Turbine Assembly, Gas Producer. See figure 20 for Breakdown." The parts that make up the Turbine Assembly, Gas Producer will be found on the test listing for figure 20.

e. Directional references left and right are determined by standing at the rear of the aircraft or engine and looking forward.

5. How to Locate Repair Parts.

a. When National Stock Number of Part Number Is Unknown:

(1) First. Using the table of contents, determine the assembly group within which the repair part belongs. This is necessary since illustrations are prepared for assembly groups, and listings are divided into the same groups.

(2) *Second.* Find the illustration covering the assembly group to which the repair part belongs.

(3) *Third.* Identify the repair part on the illustration and note the illustration figure and item number of the repair part.

(4) *Fourth.* Using the Repair Parts Listing, find the figure and item number noted on the illustration.

b. When National Stock Number or Part Number is Known:

(1) First. Using the Index of National Stock Numbers and Part Numbers, find the pertinent National Stock Number or part number. This index is in ascending National Item Identification Number (NIIN) sequence followed by a list of part numbers in ascending alphameric sequence, cross-referenced to the illustration figure number and item number.

(2) Second. After finding the figure and item number, locate the figure and item number in the repair parts list.

6. Abbreviations (Mnemonic Codes).

Abbreviations	*Explanation*
AN	Air Force-Navy
ANPT	Aeronautical national taper pipe thread
APLTO	Applicable to
ASSYFR	Assemble from
AV	Twenty-five
AWG	American wire gage
AX	Twenty
BE	Bale
BKDN	Breakdown
BRKDWN	Breakdown into
BT	Bottle
BTU	British thermal unit(s)
BX	Box
CC	Cubic centimeter(s)
CFM	Cubic feet per minute
CFS	Cubic feet per second
CI	Cubic inch
CK	Cake
CN	Can
CNSWTH	Consoldiated with
C/O	Consists of (component of)
CP	Candle power
CRES	Corrosion resistant steel
CW	Continuous wave(s)
DEG	Degree(s)
DR	Drum
EA	Each
FIG	Figure
FT	Foot
GL	Gallon
GPH	Gallons per hour
GR	Gross
HD	Hundred
IN	Inch
INTRCH	Interchangeable with
KC	Kilocycle(s)
KT	Kit
KW	Kilowatt(s)
LB	Pound
LH	Left-hand
MASTER	Master item
MIN	Minimum
MS	Military Standard
MWO	Modification work order
MX	Thousand
NAS	National aircraft standard
NC	American national coarse thread
NEF	American national extra fine thread
NF	American national fine thread
NHA	Next higher assembly
NS	American national special thread
O/A	Over-all
OBS-AFT CMPL-W	Obsolete after compliance with
OBS-BY	Obsoleted by
OBSLTS	Obsoletes
PC	Piece
PG	Package
PK	Pack
PORM	Plus or minus
PSI	Pounds per square inch
PT	Pint
REWKTO	Rework to
RH	Right-hand
RMKS	Remarks
RO	Roll
RPL-BY	Replaced by
RPLS	Replaces
SE	Set
SF	Square foot
SH	Sheet
SI	Square inch
SL	Spool
SPEC	Specification(s)
SX	Stick
TRNSTO	Transfer to
TU	Tube
U/O	Used on
USBL EFF	Usable effectivity
USE-AFT- CMPL-W	Use after compliance with
USE-UNTIL CMPL-W	Use until compliance with
U/W	Used with
W	Watt(s)
W	Wide, width
W/	With
WHEN EXHTD RQTN NHA	When exhausted requisition next higher assembly
W/O	Without

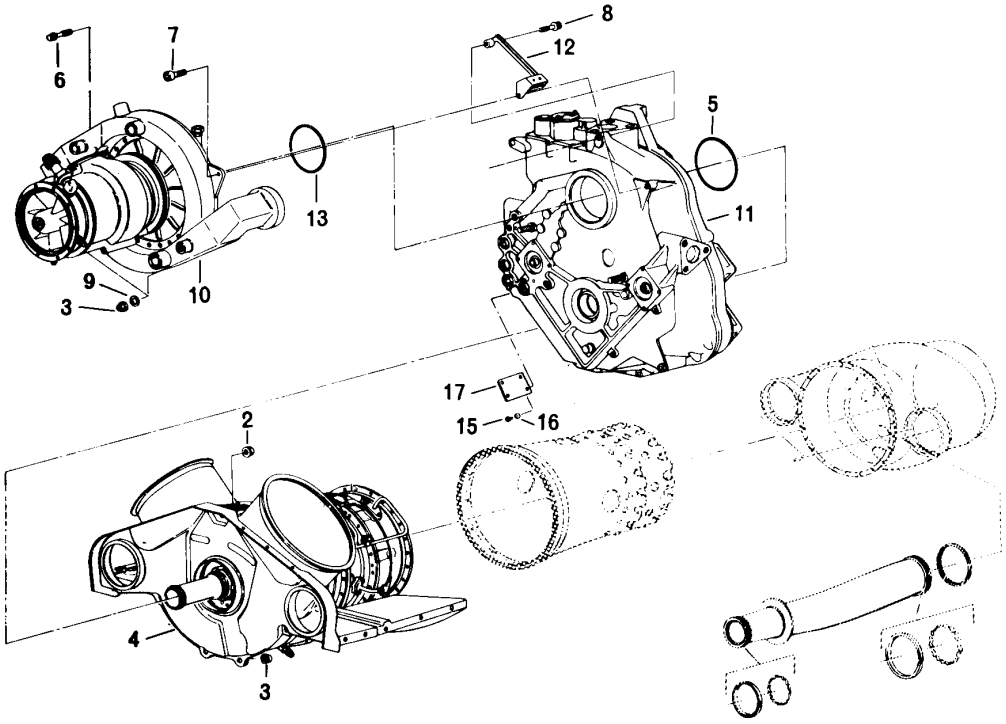

Figure 1. Engine Assembly

(1) ILLUSTRATION (A) FIG. NO.	(B) ITEM NO.	(2) SMR CODE	(3) NATIONAL STOCK NUMBER	(5) PART NUMBER	(4) FSCM	(6) DESCRIPTION USABLE ON CODE	(7) U/M	(8) QTY INC IN UNIT
1	2	PAOZZ	5310–00–881–0944	MS21043–5	96906	NUT, SELF–LOCKING, EX	EA	1
1	3	PADZZ	5310–00–844–4872	MS21043–4	96906	NUT, SELF–LOCKING, EX	EA	6
1	4	ADDDD		6898739	63005	TURBINE ASSY, GAS SEE FIGURE 8 FOR BREAKDOWN	EA	1
1	5	PADZZ	5331–00–167–5139	M83248/1–153	81349	PACKING, PREFORMED	EA	1
1	6	PAOZZ	5306–00–947–4250	MS9218–12	96906	BOLT, MACHINE	EA	1
1	7	PAOZZ	5305–00–611–3170	6849468–1214	630052	SCREW, CAP, SOCKET HE	EA	1
1	8	PAOZZ	5306–01–046–5292	MS9218–23	96906	BOLT, MACHINE	EA	1
1	9	PAOZZ	5310–00–515–7449	AN960C416L	88044	WASHER, FLAT	EA	2
1	10	ADDDD		6890570	63005	COMPRESSOR, AXIAL TU SEE FIGURE 3 FOR BREAKDOWN	EA	1
1	11	ADDDD		6879863	63005	GEARBOX, ACCESSORY SEE FIGURE 9 FOR BREAKDOWN	EA	1
1	12	PAOZZ	2945–01–040–6986	6876685	63005	BRACKET, INTAKE AIR	EA	1
1	13	PADZZ	5330–00–166–1041	M83248/1–041	81349	PACKING, PREFORMED	EA	1
1	15	PADZZ	5305–00–984–6189	MS35206–241	96906	SCREW, MACHINE	EA	4
1	16	PADZZ	5310–00–045–3299	MS35338–42	96906	WASHER, LOCK	EA	4
1	17	PADZZ	9905–01–045–0557	6887192	63005	PLATE, IDENTIFICATION	EA	1

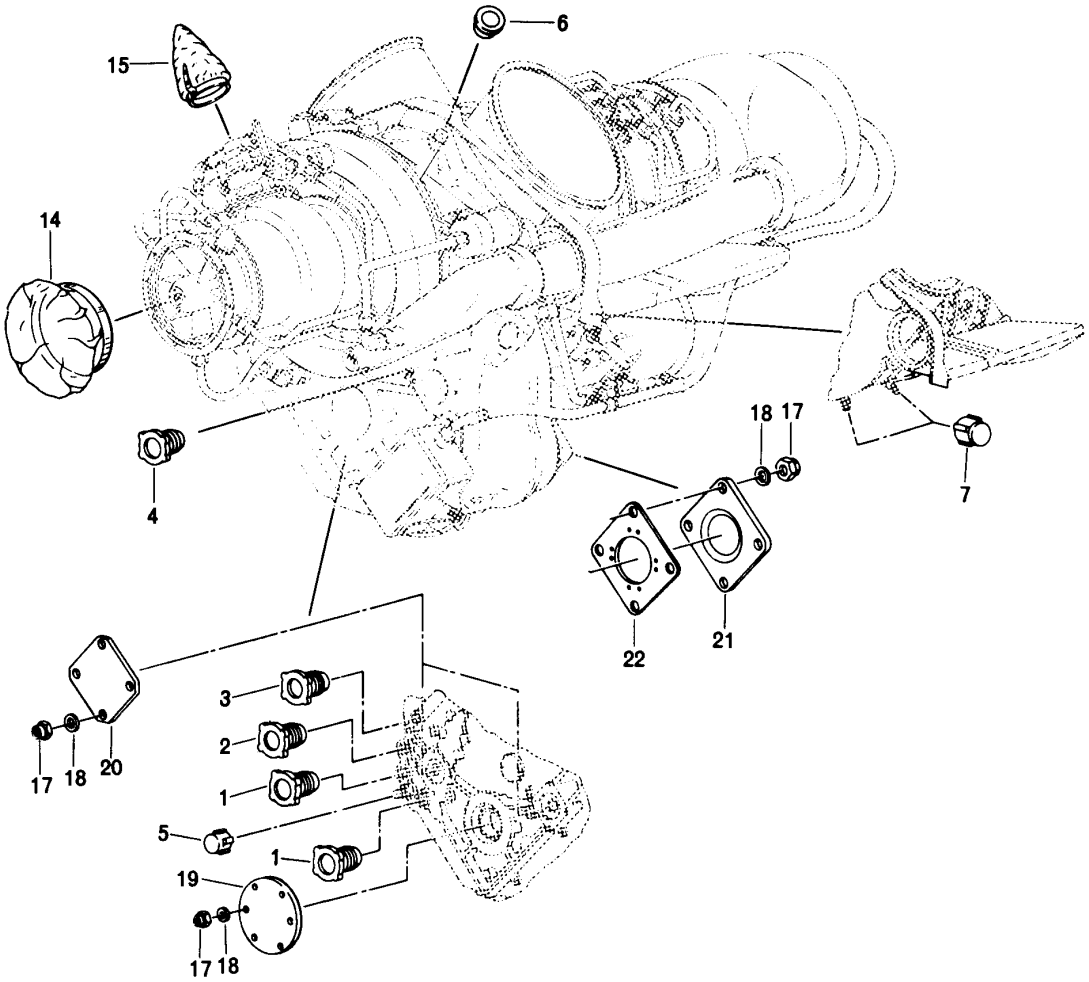

Figure 2. Engine Shipping Parts (Sheet 1 of 2)

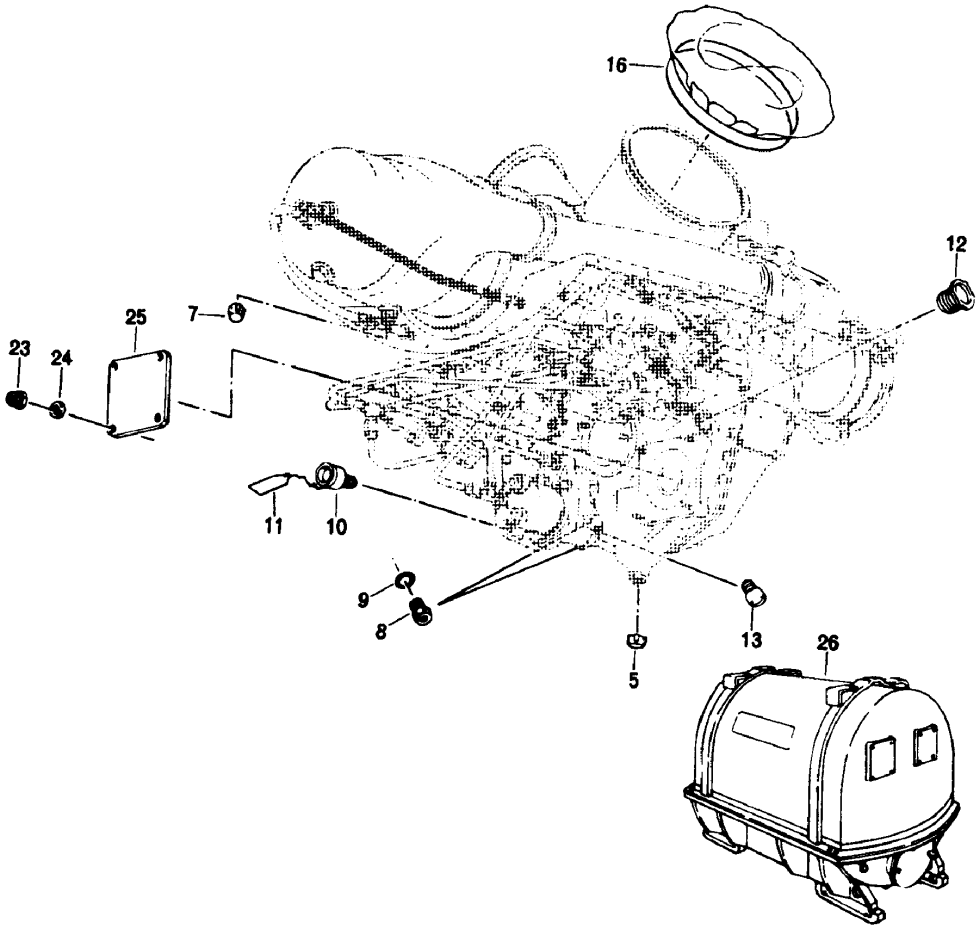

Figure 2. Engine Shipping Parts (Sheet 2 of 2)

(1) ILLUSTRATION (a) FIG. NO.	(b) ITEM NO.	(2) SMR CODE	(3) NATIONAL STOCK NUMBER	(4) PART NUMBER	(5) FSCM	(6) DESCRIPTION USABLE ON CODE	(7) U/M	(8) QTY INC IN UNIT
						GROUP 0401 ENGINE SHIPPING PARTS		
2	1	PBOZZ	5340-00-530-5543	1604-325Y	97945	PLUG, PROTECTIVE, DUS	EA	2
2	2	PBOZZ	5340-00-857-5643	1604-326Y	97945	PLUG, PROTECTIVE	EA	1
2	3	PBOZZ	5340-00-530-5532	1604-322Y	97945	PLUG, PROTECTIVE	EA	1
2	4	PBOZZ	5340-00-857-5640	1604-321Y	97945	PLUG, PROTECTIVE	EA	1
2	5	PBOZZ	5340-00-855-1268	1604-171Y	34662	CAP, PROTECTIVE, D	EA	2
2	6	PBOZZ	5340-00-290-7225	NAS816-17	80205	CAP-PLUG, PROTECTIVE 0.173-0.240 IN. DIA	EA	V
2	6	PBOZZ	5340-01-109-7061	M5501/7-F3	81349	CAP-PLUG, PROTECT 0.236-0.296 IN. DIA	EA	V
2	6	PBOZZ	5340-00-958-3882	NAS816-29	80205	CAP-PLUG, PROTECT 0.299-0.365 IN. DIA	EA	V
2	6	PBOZZ	5340-00-902-7811	NAS816-36	80205	PLUG, PROTECTIVE, DUS 0.333- 0.392 IN DIA	EA	V
2	7	PBOZZ	5340-00-720-6431	P7004	77445	CAP, PROTECTIVE, D	EA	3
2	8	PBOZZ	5365-00-948-0634	MS9015-03	96906	PLUG, MACHINE THREAD	EA	2
2	9	PBOZZ	5330-00-618-9854	MS9020-03	96905	PACKING, PREFORMED	EA	2
2	10	PBOZZ	5340-00-998-4992	6840364-5	63005	PLUG, PROTECTIVE	EA	1
2	11	PBOZZ	9905-00-158-0003	6866246	63005	PLATE, INSTRUCTION	EA	1
2	12	PBOZZ	5340-00-813-5435	1604-327Y	97945	PLUG, PROTECTIVE	EA	1
2	13	PBOZZ	5340-00-855-7886	6840364-3	63005	PLUG, PROTECTIVE	EA	1
2	14	PBOZZ	8145-00-571-5565	6800088-3	63005	COVER, PROTECTIVE CL	EA	1
2	15	PBOZZ	8145-00-451-2947	6868675-1	63005	COVER, PLASTIC SHIPP	EA	1
2	16	PBOZZ	8115-00-887-1953	6800088-10	63005	COVER, PLASTIC SHIPP	EA	2
2	17	PBOZZ	5310-00-877-5796	MS21044N4	96906	NUT, SELF-LOCKING, HE	EA	14
2	18	PAOZZ	5310-00-194-0637	MS9320-10	96906	WASHER, FLAT	EA	14
2	19	PBOZZ	2840-01-097-0813	23001757	63005	PLATE SHIPPING	EA	1
2	20	PBOZZ	2840-00-421-0443	6859822	63005	COVER PLATE, SHIPPING	EA	2
2	21	PBOZZ	2840-00-145-7961	AN100043	88044	COVER, ACCESS	EA	1
2	22	PBOZZ	5330-01-453-0554	AS9134-01	81343	GASKET	EA	1
2	23	PBOZZ	5310-00-088-0553	MS21044N5	96906	NUT, SELF-LOCKING	EA	4
2	24	PBOZZ	5310-00-194-0636	MS9320-11	96906	WASHER, FLAT	EA	4
2	25	PBOZZ	2840-00-404-0864	6859823	63005	COVER ASSY, SHIPPING	EA	1
2	26	PAODD	8145-00-034-1063	6873963	63005	SHIPPING AND STORAGE	EA	1
2	27	PBOZZ	8115-00-887-1954	6800287	63005	ENVELOPE, ENGINE	EA	1

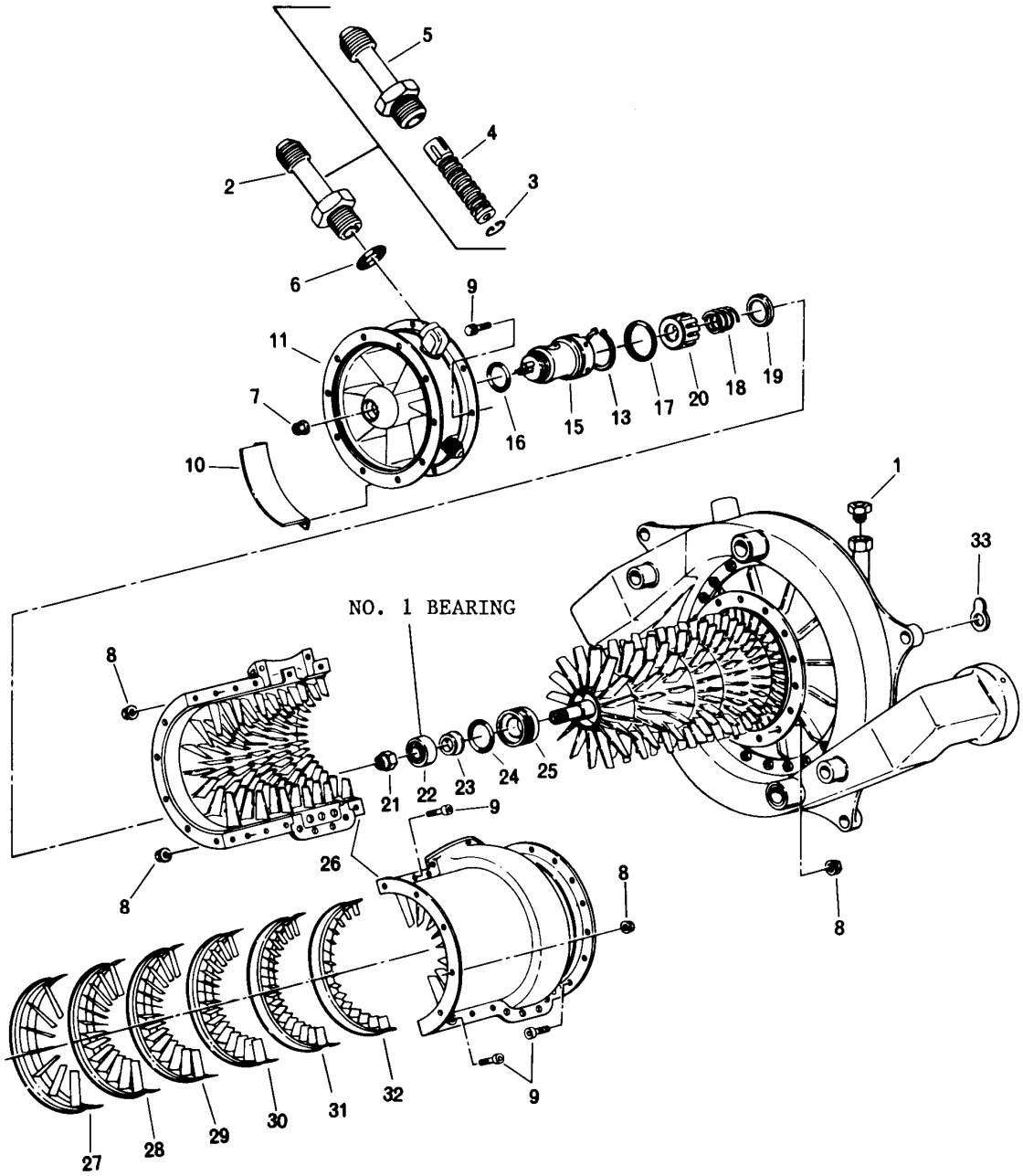

Figure 3. Turbine Axial Compressor (Sheet 1 of 2)

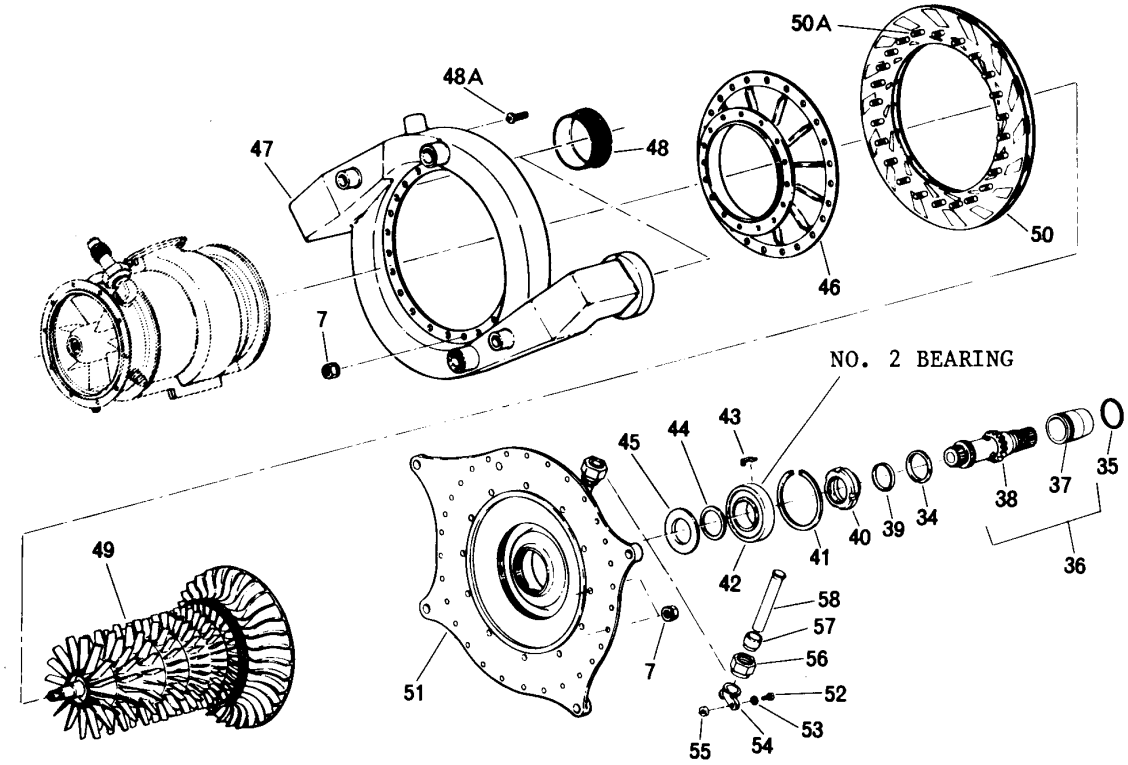

Figure 3. Turbine Axial Compressor (Sheet 2 of 2)

(1) ILLUSTRATION (a) FIG. NO.	(b) ITEM NO.	(2) SMR CODE	(3) NATIONAL STOCK NUMBER	(4) PART NUMBER	(5) FSCM	(6) DESCRIPTION USABLE ON CODE	(7) U/M	(8) QTY INC IN UNIT
						GROUP 0402 COMPRESSOR SECTION		
						TURBINE AXIAL COMPRESSOR		
3		ADDDD		6890570	63005	COMPRESSOR, AXIAL, TU SEE FIGURE 1 FOR NHA	EA	1
3	1	PAFZZ	2840-01-034-4318	6874924-0	63005	.ORIFICE, DIFFUSER VE 0.168-0.176 IN. LG.	EA	1
3	1	PAFZZ	2840-01-034-4320	6874924-1	63005	.ORIFICE, DIFFUSER VE 0.197-0.205 IN. LG.	EA	V
3	1	PAFZZ	2840-01-034-4319	6874924-2	63005	.ORIFICE, DIFFUSER VE 0.217-0.225 IN. LG.	EA	V
3	1	PAFZZ	2840-01-034-4321	6874924-3	63005	.ORIFICE, DIFFUSER VE 0.236-0.244 IN. LG.	EA	V
3	1	PAFZZ	2840-01-034-4322	6874924-4	63005	.ORIFICE, DIFFUSER VE 0.266-0.274 IN. LG.	EA	V
3	1	PAFZZ	2840-01-034-4323	6874924-5	63005	.ORIFICE, DIFFUSER VE 0.296-0.304 IN. LG.	EA	V
3	1	PAFZZ	2840-01-034-8258	6874924-6	63005	.ORIFICE, DIFFUSER VE 0.326-0.334 IN. LG.	EA	V
3	1	PAFZZ	2840-01-036-6830	6874924-7	63005	.ORIFICE, DIFFUSER VE 0.356-0.364 IN. LG.	EA	V
3	2	PAOZZ	4730-01-087-9922	6898989	63005	.NIPPLE, TUBE	EA	1
3	3	XAOZZ		6873905	63005	..RING	EA	1
3	4	XAOZZ		6873658	63005	.. RESTRICTOR U/W 6873964	EA	1
3	4	XAOZZ		6898986	63005	..RESTRICTOR U/W 6898989	EA	1
3	5	XAOZZ		6873659	63005	..BODY U/W 6873964	EA	1
3	5	XAOZZ		6898987	63005	.. BODY U/W 6898989..	EA	1
3	6	PAOZZ	5330-01-043-5820	AS3084-03	81343	.PACKING, PREFORMED	EA	1
3	7	PADZZ	5310-00-844-3302	MS21043-3	96906	.NUT, SELF-LOCKING	EA	66
3	8	PAOZZ	5310-00-946-0064	6859880	63005	.NUT, PLAIN, EXTENDED	EA	43
3	9	PAOZZ	5306-00-946-0659	6849468-0805	63005	.BOLT, INTERNAL WRENC	EA	43
3	10	PADZZ	9905-00-613-2571	6876673	63005	.PLATE, IDENTIFICATIO	EA	1
3	11	PADZZ	2840-01-037-9318	6890530	63005	.SUPPORT ASSY, FRONT	EA	1
3	13	PADZZ	5365-01-045-9996	6890595	63005	.RING, RETAINING	EA	1
3	15	PADDD	2840-01-039-5838	6893617	63005	.HOUSING ASSY, BEARIN	EA	1
3	16	PADZZ	5330-00-166-1001	M83248/1-020	81349	.PACKING, PREFORMED	EA	1
3	17	PADZZ	5330-00-166-1020	M83248/1-024	81349	.PACKING, PREFOMED	EA	1
3	18	PADZZ	5360-01-003-5352	6878447	63005	.SPRING, HELICAL, COMP	EA	1
3	19	XDOZZ		23004534	63005	.HOLDER, SPRING	EA	1
3	20	PADZZ	2840-01-034-4327	6876315	63005	.DAMPER, VIBRATION, CO	EA	1
3	21	PADZZ	5310-00-150-3632	6875047	63005	.NUT, SELF-LOCKING, CA	EA	1
3	22	PADZZ	3110-01-129-2775	6898607	63005	.BEARING, BALL, ANNULA	EA	1
3	23	PADZZ	2840-00-940-8516	6871902	63005	.SEAL, MATING RING, C0	EA	1
3	24	PADZZ	5330-01-044-0786	AS3085-022	81343	.PACKING, PREFOMED	EA	1
3	25	PADZZ	5330-01-162-2401	23004513	63005	.SEAL, PLAIN ENCASED	EA	1
3	26	PAODD	2840-01-037-9347	6877410	63005	.CASE AND VANE ASSEM	EA	1
3	27	PADZZ	2840-01-079-3970	6899391	63005	..VANE ASSEMBLY, STATO	EA	2

(1) ILLUSTRATION (a) FIG. NO.	(b) ITEM NO.	(2) SMR CODE	(3) NATIONAL STOCK NUMBER	(4) PART NUMBER	(5) FSCM	(6) DESCRIPTION USABLE ON CODE	(7) U/M	(8) QTY INC IN UNIT
3	28	PADZZ	2840-01-079-3969	6899392	63005	..VANE ASSEMBLY, STATO	EA	2
3	29	PADZZ	2840-01-079-3968	6899393	63005	..VANE ASSEMBLY, STATO	EA	2
3	30	PADZZ	2840-01-082-8366	6899394	63005	..VANE ASSEMBLY, STATO	EA	2
3	31	PADZZ	2840-01-079-3971	6899395	63005	.. VANE ASSEMBLY, STATO	EA	2
3	32	PADZZ	2840-01-079-3972	6899396	63005	.. VANE ASSEMBLY, STATO	EA	2
3	33	PADZZ	5365-01-045-3415	6871162	63005	.SHIM 0.002 IN. THK	EA	V
3	34	PADZZ	5365-01-042-9839	6726656-96	63005	.RING, RETAINING	EA	1
3	35	PADZZ	5330-01-044-0784	AS3085-017	81343	.PACKING, PREFORMED	EA	1
3	36	ADDOO		6891625	63005	.GEARSHAFT, SPUR	EA	1
3	37	PADZZ	3110-01-044-4476	6890483	63005	.. RING, BEARING, INNER	EA	1
3	38	PADDD	3040-01-147-8590	6899239	63005	. .GEARSHAFT , SPUR	EA	1
3	39	PADZZ	2840-00-613-2663	6876016	63005	.RING, PISTON	EA	1
3	40	PADZZ	2840-00-613-2664	6876878	63005	.NUT, SPANNER, LH	EA	1
3	41	PADZZ	5365-00-010-8425	6859734-2	63005	.RING, RETAINING	EA	1
3	42	PADDD	3110-01-044-4471	6889093	63005	.BEARING, BALL, ANNULA	EA	1
3	43	PADZZ	5315-00-084-4890	6877081	63005	.KEY, MACHINE	EA	1
3	44	PADZZ	5365-00-924-6215	6820512-1	63005	.SHIM 0.004 IN. THK	EA	V
3	44	PADZZ	5365-00-924-6214	6820512-2	63005	.SHIM 0.006 IN. THK	EA	V
3	44	PADZZ	5365-00-924-6213	6820512-3	63005	.SHIM 0.010 IN. THK	EA	V
3	44	PADZZ	5365-00-924-6210	6820512-4	63005	.SHIM 0.003 IN. THK	EA	V
3	45	PADZZ	2840-00-613-2700	6876877	63005	.SLINGER, OIL, REAR	EA	1
3	46	PADDD	2840-00-613-2847	6870811	63005	.DIFFUSER ASSY, FRONT	EA	1
3	47	PADDD	2840-01-037-9320	6851574	63005	.SCROLL ASSY, DIFFUSE	EA	1
3	48	PADZZ	2840-00-613-2932	6875248	63005	..INSERT, DISCHARGE	EA	2
3	48A	PADZZ	5307-01-048-7543	6876741	63005	..BOLT, WELDING	EA	30
3	49	ADDDD		6890529	63005	.ROTOR ASSY, COMPRESS SEE FIGURE 4 FOR BREAKDOWN	EA	1
3	50	PADDD	2840-00-613-2758	6870813	63005	.VANE ASSY, DIFFUSER	EA	1
3	50A	PADZZ	5307-01-048-7543	6876741	63005	..BOLT WELDING	EA	36
3	51	PADDD	2840-01-037-9319	6851430	63005	.DIFFUSER,COMPRESSOR	EA	1
3	52	PAFZZ	5305-01-046-0550	6887097	63005	..SCREW, MACHINE	EA	1
3	53	PAFZZ	5310-00-531-9514	AN960C6	88044	..WASHER, FLAT	EA	1
3	54	PAFZZ	5340-00-617-1340	6871540	63005	..CLAMP, LOOP	EA	1
3	55	PAFZZ	5365-00-801-4637	NAS1057W3-012	80205	..SPACER, SLEEVE	EA	1
3	56	PAFZZ	4730-00-803-1403	6743301-8	63005	..NUT, TUBE COUPLING	EA	1
3	57	PAFZZ	4730-00-540-6719	MS20819-BK	96906	..SLEEVE, FLARED, TUBE.	EA	1
3	58	PAFZZ	2840-01-038-1209	6887121	63005	..TUBE, DIFFUSER VENT	EA	1

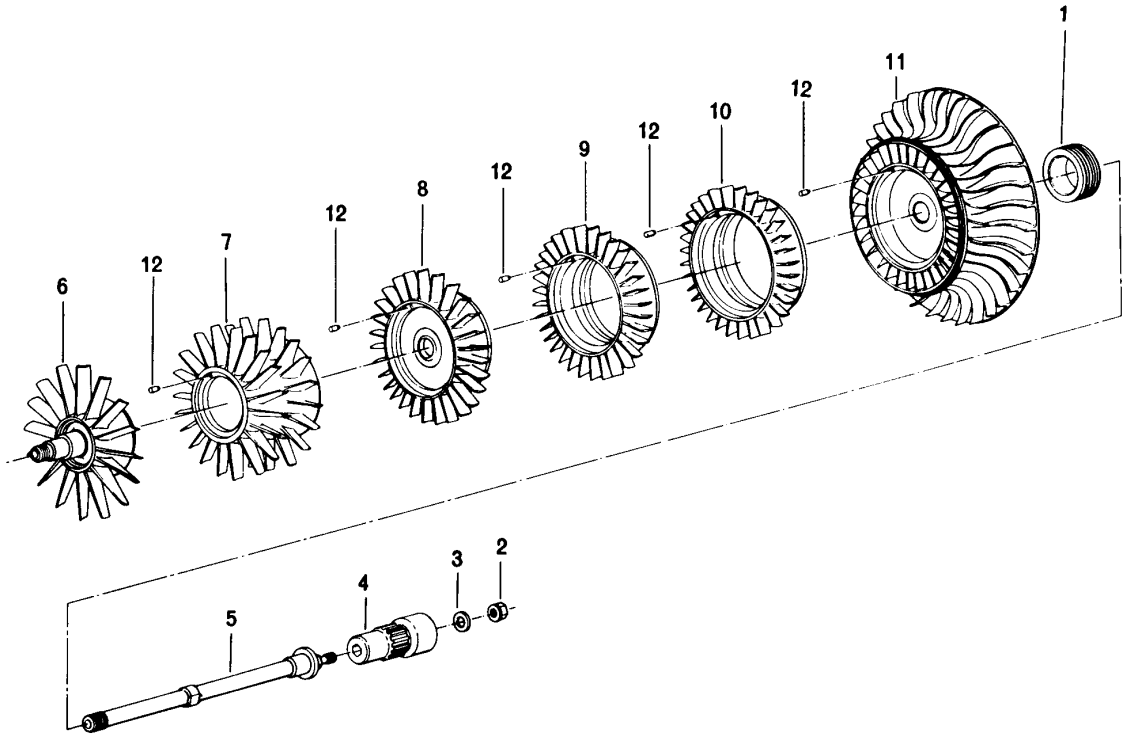

Figure 4. Compressor Rotor Assembly

(1) ILLUSTRATI0N (a) FIG. NO.	(b) ITEM NO.	(2) SMR CODE	(3) NATIONAL STOCK NUMBER	(4) PART NUMBER	(5) FSCM	(6) DESCRIPTION USABLE ON CODE	(7) U/M	(8) QTY INC IN UNIT
						GROUP 0402 COMPRESSOR ROTOR ASSEMBLY		
4		ADDOO		6890529	63005	ROTOR ASSY, COMPRESS SEE FIGURE 3 FOR NHA.	EA	1
4	1	PADZZ	2840-00-613-2992	6876872	63005	.SEAL, REAR BEARING	EA	1
4	2	PADZZ	5310-00-950-2634	6823169	63005	.NUT, SPECIAL	EA	1
4	3	PADZZ	5310-00-923-3848	6823170	63005	.WASHER, FLAT	EA	1
4	4	PADZZ	2840-01-082-9693	6898561	63005	.COUPLING, ADAPTER	EA	1
4	5	PADZZ	2840-00-613-2943	6871259	63005	.BOLT, ROTOR TIE	EA	1
4	6	XBDOO		23033721	63005	.COMPRESSOR ROTOR, AX	EA	1
4	7	XBDOO		23033722	63005	.COMPRESSOR ROTOR, AX	EA	1
4	8	XBDOO		23033724	63005	.WHEEL ASSY	EA	1
4	9	XBDOO		23033725	63005	.WHEEL ASSY.	EA	1
4	10	XBDOO		23033726	63005	.WHEEL ASSY	EA	1
4	11	PADOO	2840-00-613-3013	6876873	63005	.IMPRELLER ASSY.	EA	1
4	12	PADOO	5315-00-619-7464	MS9105-01	96906	..PIN, STRAIGHT, HEA	EA	5

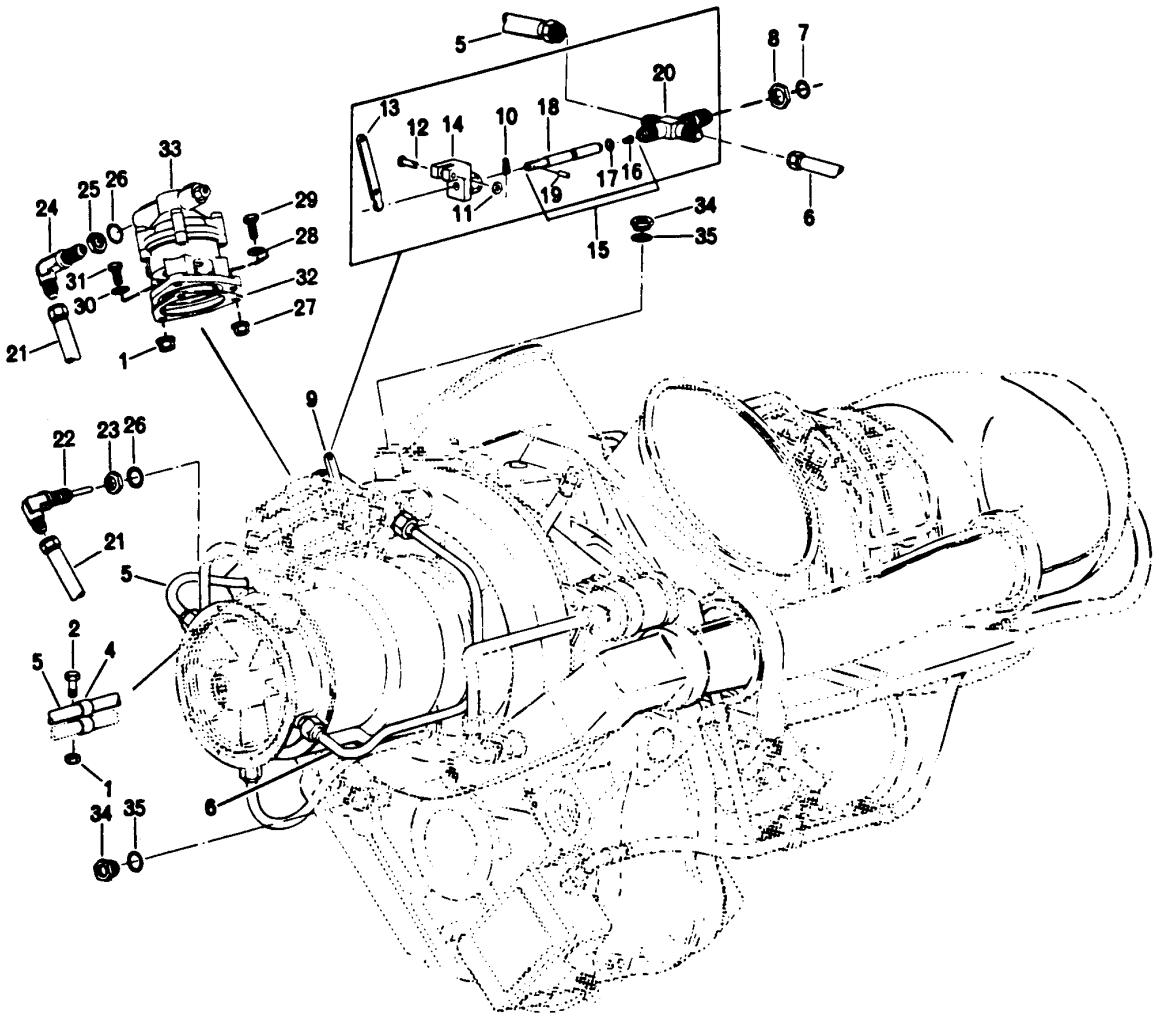

Figure 5. External Air Lines

(1) ILLUSTRATION (a) FIG. NO.	(b) ITEM NO.	(2) SMR CODE	(3) NATIONAL STOCK NUMBER	(4) PART NUMBER	(5) FSCM	(6) DESCRIPTION USABLE ON CODE	(7) U/M	(8) QTY INC IN UNIT
						GROUP 0402 EXTERNAL AIR LINES		
5	1	PAOZZ	5310-00-844-3302	MS21043-3	96906	NUT, SELF-LOCKING, EX	EA	2
5	2	PAOZZ	5306-00-282-3928	AN101007	88044	BOLT, MACHINE	EA	1
5	4	PAOZZ	5340-00-420-1746	MS9825-04	96906	CLAMP, LOOP	EA	1
5	5	PAOZZ	4710-01-036-6906	6871473	63005	TUBE ASSEMBLY, METAL	EA	1
5	6	PAOZZ	4710-01-004-6047	6876333	63005	TUBE ASSEMBLY, METAL	EA	1
5	7	PAOZZ	5330-01-035-4225	AS3084-06	81343	PACKING, PREFORMED	EA	1
5	8	PAOZZ	5310-01-034-1103	NAS509-9C	80205	NUT, PLAIN, HEXAGON	EA	1
5	9	PAOOF	4820-00-774-8353	6856983	63005	VALVE, CROSS	EA	1
5	10	PAOZZ	5315-00-815-1405	MS24665-151	96906	.PIN, COTTER	EA	1
5	11	PAOZZ	5310-00-188-3744	MS9320-09	96906	.WASHER, FLAT	EA	1
5	12	PAOZZ	5315-00-619-6511	AN121662	88044	.PIN, STRAIGHT, HEA	EA	1
5	13	PAOZZ	4820-00-229-3417	6878491	63005	.LEVER, MANUAL CONTRO	EA	1
5	14	XAOZZ		6852176	63005	.GUIDE ASSEMBLY, POPP	EA	1
5	15	PAOOO	2840-00-438-2060	6856986	63005	.POPPET AND SEAT ASS	EA	1
5	16	PAOZZ	5305-00-941-3551	MS35275-213	96906	..SCREW MACHINE	EA	1
5	17	PAOZZ	2840-00-130-5945	6856988	63005	..SEAT, VALVE	EA	1
5	18	XAOZZ		6856987	63005	..POPPET	EA	1
5	19	PAOZZ	5315-00-802-1987	MS9105-28	96905	..PIN, STRAIGHT, HEADLE	EA	1
5	20	XAOZZ		6856984	63005	.BODY, VALVE	EA	1
5	21	PAOZZ	4710-01-024-6096	6876294	63005	TUBE ASSEMBLY, METAL	EA	1
5	22	PAOZZ	2995-00-940-7345	6850921	63005	ELBOW, PRESSURE PROB	EA	1
5	23	PAOZZ	5310-00-208-3747	NAS509-7	80205	NUT, PLAIN, HEXAGON	EA	1
5	24	PAOZZ	4730-00-722-7214	MS24394J4	96906	ELBOW, TUBE	EA	1
5	25	PAOZZ	5310-00-079-1967	AN924-4J	88044	NUT, PLAIN, HEXAGO	EA	1
5	26	PAOZZ	5330-00-020-0203	M83248/1-904	81349	PACKING, PREFORMED	EA	2
5	27	PAOZZ	5310-00-844-4872	MS21043-4	96906	NUT, SELF-LOCKING, EX	EA	1
5	28	PAOZZ	5310-00-194-0637	MS9320-10	96906	WASHER, FLAT	EA	1
5	29	PAOZZ	5306-00-281-8491	AN104711	88044	BOLT, MACHINE	EA	1
5	30	PAOZZ	5310-00-188-3744	MS9320-09	96906	WASHER, FLAT	EA	2
5	31	PAOZZ	5306-00-616-5989	AN104613	88044	BOLT, MACHINE	EA	2
5	32	PAOZZ	5330-00-930-4553	6852734	63005	GASKET RPLS-6891453	EA	1
5	33	PAODD	2840-01-191-7811	23007879	63005	VALVE ASSEMBLY, BLEE SEE FIGURE 6 FOR BREAKDOWN	EA	1
5	34	PAOZZ	5365-00-289-3070	MS9015-08	96906	PLUG, MACHINE THREAD	EA	2
5	35	PAOZZ	5330-01-043-5822	AS33084-08	81343	PACKING, PREFORMED	EA	2