Coursework Cover Sheet

Students should complete the input fields contained in this form and attach it in front of your formal assessment submission. All fields within this form are required. Please ensure that check boxes and radio buttons are appropriately selected. The last three questions are just for you to personally consider.

Department and assessment information:

School Name: School of Engineering and Computing

Assessment title: Assignment 3 - Dissertation

Course Title: MSc Mechatronics and Intelligent Machines
Module Title: MSc Project (Engineering)
Module Code: EL4895
Year of Study: 2023-24
Student Number: G21242294

Academic Misconduct / Plagiarism Declaration

By attaching this front cover sheet to my assessment I confirm and declare that **I am the sole author of this work**, except where otherwise acknowledged by appropriate referencing and citation, and that I have taken all reasonable skill and care to ensure that no other person has been able, or allowed, to copy this work in either paper or electronic form, and that prior to submission I have read, understood and followed the University regulations as outlined in the Academic Integrity Policy and Procedure for Academic Misconduct

Have you checked the following? This will help your assessment achievement.

I have applied the learning outcomes for this module ☒
I have checked for Academic Integrity via Turn-it-in ☒
I have followed the guidance in the Assessment Brief and have not used AI to boost my grade unfairly. ☒
I have used references in accordance with instructions in the Assessment Brief ☒
I have proofread my work for spelling, grammar and punctuation. ☒
I have checked that the word count/size of this submissions accords with the guidance provided in the Assessment Brief. ☒

Well-being

We wish to support any student who is experiencing mitigating circumstances which prevents students from performing to the best of their ability when completing or submitting assignments. If you are experiencing such circumstances, then you may apply for Mitigating Circumstances. Wherever possible this must be done prior to handing in your assignment.

Do you need to apply for mitigating circumstances for this assignment Please select Yes / No

Please refer to the Mitigating Circumstances Policy

Questions you may wish to consider:

1. Have I allowed sufficient time to prepare this assessment?

2. Have I reflected on previous feedback and made improvements in accordance with advice?

3. What grade am I expecting?

Design and Fabrication of Magnetic Soft Robotic Gripper

by

Abhishek Bhardwaj

Project Submitted in Partial Fulfillment of the Requirements for
the Degree of Master of Science in the Course of Mechatronics and Intelligent Machines

School of Engineering and Computing

© Abhishek Bhardwaj

UNIVERSITY OF CENTRAL LANCASHIRE

August 2024

Copyright in this work rests with the author. Please ensure that any reproduction
or re-use is done in accordance with the relevant national copyright legislation.

Ethics Statement and Non-Disclosure

This research project aimed to design and fabricate a magnetically actuated soft robotic gripper. It is necessary to note that this project did not involve human subjects, animals, or any other ethical considerations. As such, no Institutional Review Board (IRB) approval was required, and all research activities were conducted with the utmost adherence to ethical standards. Furthermore, there are no non-disclosure requirements for this dissertation. All the information presented herein is intended for public dissemination, ensuring transparency and openness in sharing the findings and advancements achieved through this research endeavor. The absence of ethical considerations and non-disclosure requirements underscores the use of non-sensitive and publicly available data in this project, supporting the validity and accessibility of the research outcomes for the scientific community and beyond.

Abstract

This dissertation addresses the design, fabrication and analysis of a soft robotic gripper actuated by a permanent magnet. The gripper leverages a mixture of silicone and magnetite to build a dual-state ability, enabling it to open and close in reaction to external magnetic fields. The gripper would be capable of grasping various objects. This method overcomes the constraints of conventional rigid robots, providing greater adaptability and gentler handling of fragile objects. A permanent neodymium magnet is used to generate magnetic field that interacts with the magnetized gripper. The project explores the ideal size and materials for the gripper and permanent magnet, focusing on reliable actuation. Several moulds are designed in SolidWorks and then 3D printed to cure the grippers with different concentration mixtures of soft material and magnetic particles. The FEA and FEM simulation of the gripper is conducted using ANSYS Workbench, establishing the design can hold out against operational forces without failure. The project engages 3D printing techniques and soft materials to build the gripper. The study presents a new method of actuation that merges the advantages of soft material flexibility with magnetic manipulation, indicating potential use in fields that require delicate yet secure handling, such as medical devices, food processing, and adaptive gripping technologies. Future research will explore further miniaturization and integration with sensory feedback systems to enhance the gripper's functionality and autonomy.

Keywords: Magnetic soft robotic gripper, Magnet actuation, 3D printing, Soft materials, Magnetic force control, Grasping

Table of Contents

Department and assessment information: i

Academic Misconduct / Plagiarism Declaration i

Have you checked the following? This will help your assessment achievement. i

Well-being i
Questions you may wish to consider: ii
Ethics Statement and Non-Disclosure iv
Abstract v
Table of Contents vi
List of Tables ix
List of Figures x

Introduction 12
Background and Context 12
Scope and Objectives 12
Achievements 13
Overview of Dissertation 13

Literature Review 13
Overview of Soft Robots and Soft Robotic Grippers 13
Magnetic Actuation in Soft Robotics 15
Materials for Magnetic Soft Robotics 16
Soft Materials 17
Magnetic Particle Materials 18

Methodology 19
Design of the moulds 19
FEA and Magnetic FEM Simulation 23
Materials and Components Selection 27
Material for 3D Printing 27
Permanent Magnet 28
Magnetic Particle Material 28
Soft Material 29
Fabrication of the Soft Robotic Gripper 30
1. Slicing 30
2. 3D Printing 31
3. Making of the Composite material and Soft Robotic Gripper 33
Integration of Components & Working 35

Results 36
Results of FEA & FEM Simulation in Ansys 36
Soft Robotic Gripper A 37
Soft Robotic Gripper B 39
Soft Robotic Gripper C 41

Soft Robotic Gripper D 43
Gripper's Functionality Test 45

Discussion..... 46

Conclusion 47
Summary 47
Evaluation and Project management..... 47
Project impact / Creativity and innovation 47
Future Work..... 48

References 48

Appendix A: Project Gantt Chart 51

List of Tables

Table 1: Mechanical properties of PLA 27
Table 2: Properties of the permanent magnet (Anon., n.d.) 28
Table 3: UltiMaker Cura print settings 31
Table 4: Specifications and requirements of the PLA filament for 3D printing 31
Table 5: Specifications of Ender 3 32

List of Figures

Figure 1: An overview of soft robotic gripper (AboZaid, et al., 2024) 14
Figure 2: Single bending Soft Robotic gripper example (Anon., n.d.) 15
Figure 3: MAE in an external magnetic field generated by electromagnet (E. Diller, 2014)..... 16
Figure 4: An example of the principle of touchless human-soft robot interaction based on flexible smart skin 18
Figure 5: Magnetization curves obtained before moulding for silicone samples with magnetic particles of distinct chemical compositions (Julia A. Carpenter, 2021)..... 19
Figure 6: CAD model for mould of Gripper A..... 20
Figure 7:Sketch of the mould A with dimensions in mm 20
Figure 8: CAD model for mould of Gripper B..... 21
Figure 9: Sketch of the mould B with dimensions in mm 21
Figure 10: CAD model for mould of Gripper C..... 22
Figure 11: Sketch of the mould C with dimensions in mm 22
Figure 12: CAD model for mould of Gripper D..... 23
Figure 13: Sketch of the mould D with dimensions in mm 23
Figure 14: Magnetite particle powder (Anon., n.d.)..... 29
Figure 15: Ecoflex 00-50..... 30
Figure 16: 3D printed moulds A, B, C, and D respectively..... 32
Figure 17: A schematic of the manufacturing, magnetization, and actuation of silicone parts loaded with magnetic particles. a) soft things are created by combining magnetic powder with a two-part silicone resin. The resulting viscous paste can be cast straight into molds to produce actuators with precise geometry. b) The actuators are magnetized by placing magnets in particular spots during or after the silicone resin has cured. c) The actuators are triggered by an external magnetic field. Motion comes from the interaction between the applied magnetic field, the magnetized domains of the actuator, and the gravity forces 33
Figure 18: THINKY ARE 250 Centrifugal mixer (Anon., n.d.) 34
Figure 19: Cured soft robotic gripper A, B, C, and D respectively..... 35
Figure 20: Complete mechanism of soft robotic gripper actuation 36
Figure 21: Total deformation in Gripper A 37
Figure 22: Equivalent elastic strain distribution in Gripper A..... 37
Figure 23: Equivalent stress distribution in Gripper A..... 38
Figure 24: Magnetic flux distribution in Gripper A..... 38
Figure 25: Total deformation in Gripper B 39
Figure 26: Equivalent elastic strain distribution in Gripper B..... 39
Figure 27: Equivalent stress distribution in Gripper B..... 40
Figure 28: Magnetic flux distribution in Gripper B..... 40
Figure 29: Total deformation in Gripper C 41
Figure 30: Equivalent elastic strain distribution in Gripper C 42
Figure 31: Equivalent stress distribution in Gripper C..... 42
Figure 32: Magnetic flux distribution in Gripper C..... 43

Figure 33: Total deformation in Gripper D 43
Figure 34: Equivalent elastic strain distribution in Gripper D 44
Figure 35: Equivalent stress distribution in Gripper D..... 44
Figure 36: Magnetic flux distribution in Gripper D..... 45
Figure 37: Grasping and Picking tests on various objects 46
Figure 38: Project Gantt Chart 51

Introduction

The growing need for robots competent to handle fragile objects and interact safely with humans has put forward soft robots as a practical and cost-effective alternative (AboZaid, et al., 2024). And with the advancements in this field of soft robotics and soft material science, magnetic soft robots have gained popularity because of their remarkable ability to deform under magnetic fields along with their features of mechanical compliance, tether-free actuation and biocompatibility, which has shown evident command over the traditional rigid robots ((Wang, et al., 2022). This research aims to present a simple fabrication technique for Magento-responsive soft actuators using inexpensive & easily available raw materials and equipment. The gripper design is bioinspired and offers a compliant mechanism and magnetic actuation. By integrating these principles, the gripper can achieve controlled actuation and grasping providing an effective mode of operations whether it is in the food industry or the medical sector.

Background and Context

Conventional robots with rigid bodies are extensively employed in manufacturing and can particularly perform specific tasks with great efficiency, but they offer limited adaptability along with safety concerns because of their rigid links and joints. A custom practice is to separate the workspaces of humans and robots to tackle safety issues, but it leads to complex working systems and high-cost maintenance. One of the major reasons for this problem is the inflexibility of conventional actuation (Rus & Tolley, 2015). Soft robots, on the other hand, provide an opportunity to cover up the issues. They are created with soft and/or extendable materials, such as silicone rubbers, that deform and absorb energy from collisions. These robots possess numerous degrees of freedom because of their continuously deformable build that is inspired by biological systems. Additionally, soft robots can display extraordinary adaptability, sensitivity, and agility, making them suitable for tasks in confined spaces (Marchese, et al., 2016). Magnetically driven soft actuators can further enhance the applications and work of soft materials. By combining the compliant mechanisms along with soft materials and magnetic actuation, this new system can provide a versatile and efficient tool for various applications.

Scope and Objectives

The scope of this research encircles the design, fabrication, and simulation of a soft robotic gripper actuated through a magnetic field. It covers gripper design, material selection for composite material, FEA and FEM simulation, and prototype fabrication. The objectives of this study are:

1. To design a soft robotic gripper capable of grasping.
2. To conduct FEA and FEM simulations to predict the gripper's movement, analyze stress/strain distribution, deformation and magnetic field interaction.
3. To develop composite material with suitable mechanical and magnetic properties.
4. To fabricate a prototype based on the optimal design and material.
5. To conduct tests to validate the gripper's functionality.

Achievements

Throughout this research, noteworthy achievements have been made in advancing the field of soft robotics. The design and fabrication of the soft robotic gripper demonstrate the feasibility of the actuation of the soft robotic gripper through magnetic field. The magnetic actuation system satisfactorily controls the gripper's movements, achieving efficient grasping actions. FEA and FEM simulations are used to analyse the gripper's response to magnetic fields. Thorough testing has revealed valuable insights about the gripper's performance, displaying its potential as a flexible and precise tool for several applications in numerous sectors.

Overview of Dissertation

The dissertation is divided into discrete chapters that focus on diverse aspects of the project. Chapter 2, the Literature Review, evaluates overview of soft robotic grippers, magnetic actuation in soft robotics, and materials for magnetic soft grippers. In Chapter 3, the Methodology, design, analysis, selection materials and components, fabrication process, integration of all components, and working of the soft robotic gripper are discussed in detail. Chapter 4, Results, demonstrates the final outcomes of the FEA and FEM simulation analysis and functionality test of the soft robotic gripper. Chapter 5, Discussion, focuses on analysing the interpretation of the results and some suggestions for enhancement in the field. Chapter 6, Conclusion, summarises the dissertation, project evaluation, impact, innovation, and future scope. Lastly, the references and appendix are added at the end of the document.

Literature Review

This chapter focuses on the pertinent literature, and reviews relevant research in essential domains. It studies three key areas: an overview of soft robots and soft robotic grippers, magnetic actuation in soft robotics, and materials for magnetic soft grippers. This comprehensive exploration of the existing literature highlights current state-of-the-art and essential discoveries in the field. The review establishes the background and importance of the magnetically actuated soft robotic gripper project, offering valuable insights.

Overview of Soft Robots and Soft Robotic Grippers

With the continuous development of robotics and advancements in machines, a remarkable breakthrough has taken place in the form of soft robotics. This field has witnessed rapid growth and focuses on building machines that can perform fast, accurate, and repetitive tasks efficiently through design driven by biological inspiration. Soft robots are primarily built of flexible and stretchable materials, allowing nearly unlimited degrees of freedom & incredible flexibility (AboZaid, et al., 2024).

Advancements in soft robotics, material science and flexible electronics have facilitated rapid progression in soft grippers. Soft end-effectors can potentially grasp or handle a wider range of objects than rigid grippers. Advanced materials like silicone elastomers, shape-memory materials and active polymers &

gels are increasingly being focused on producing lighter, straightforward and universally more applicable grippers that take advantage of the inherent capabilities of the materials (Jun Shintake, 2018).

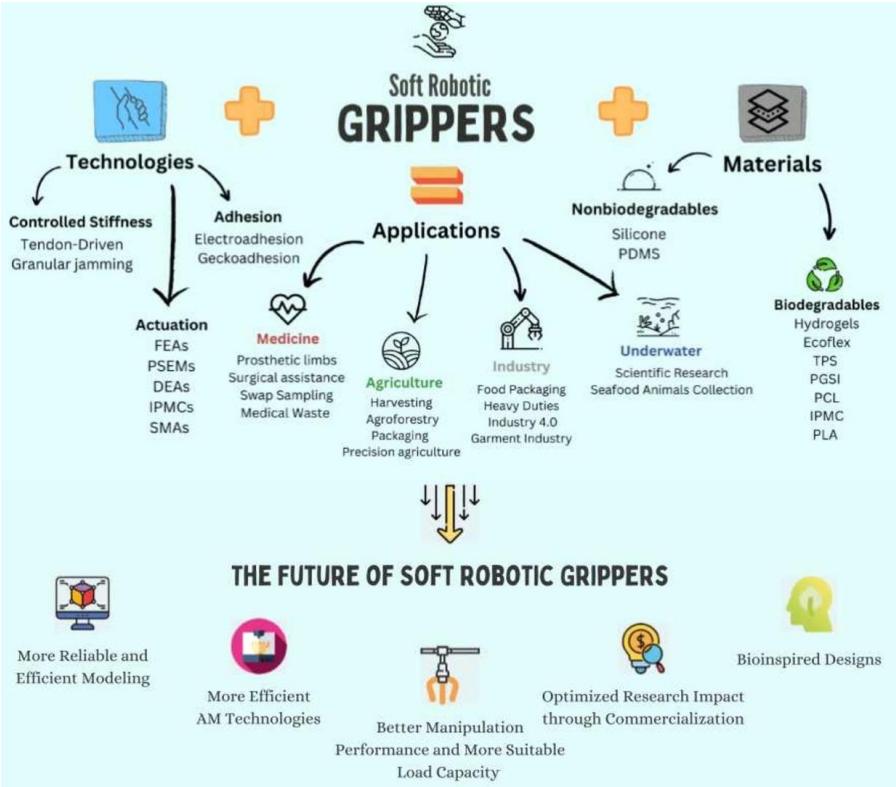

Figure 1: An overview of soft robotic gripper (AboZaid, et al., 2024)

Grasping is a pivotal task for robots in several industries like manufacturing, warehouse, and food. When operating on non-fragile objects with defined shapes, conventional rigid grippers perform well because of their ability to deploy strong forces and sustain their shape during grasping. However, they encounter difficulties with fragile objects, as they may damage the objects by exerting excessive stress at contact. Furthermore, when dealing with objects with undefined shapes, like biological objects, the grasping needs to be carefully planned to account for variations in shape whether through eyesight or otherwise. To address these challenges, soft robotic grippers have been proposed. Because they are built from soft materials and can adjust to the shape and size of the target object and distribute stress evenly (Koivikko, et al., 2020)

Several variations of soft grippers have been proposed, including bio-inspired suction cups, grippers with adjustable adhesive surfaces, grippers based on state change and jamming grippers that wrap the target object with transitional material from soft to rigid, like magnetorheological fluids (MR fluids) or granular materials (Koivikko, et al., 2020). Soft robotic grippers also come in a variety of configurations, including a single-bending actuator, two-fingered, three-fingered, and multiple-fingered actuator. These grippers are capable of establishing compliant contact with objects, hence enhancing the safety of grasping fragile materials, from everyday vegetables to delicate deep marine reefs (Zhou, et al., 2017).

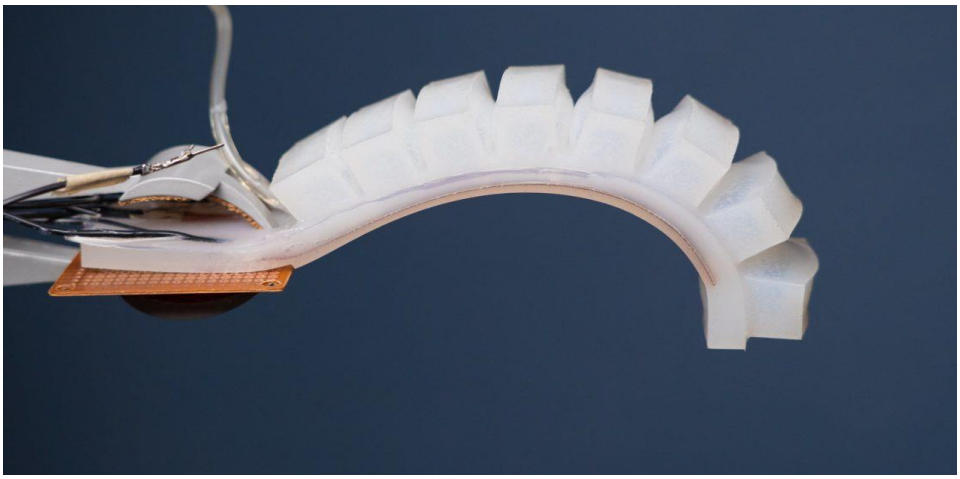

Figure 2: Single bending Soft Robotic gripper example (Anon., n.d.)

Robotic grippers can be installed with proprioceptive sensors (such as Hall-effect sensors, encoders, torque sensors, and tendon tension sensors) for estimating the speed and position of the gripper elements, as well as exteroceptive sensors (like pressure sensors, force sensors, conductive and resistive sensors, electromagnetic sensors) for gathering data about the objects (Jun Shintake, 2018).

Magnetic Actuation in Soft Robotics

Magnetic actuation is quite intriguing because of the easiness in fast and accurate controlling of the magnetic field direction and magnitude, as well as their ability to penetrate a wide range of materials like gels, polymers, papers, and fluids. Integrating magnetic particles into these materials makes it possible to actuate them when an external magnetic field is applied. Magneto-active elastomer (MAE) is the mixture of magnetic particles or fillers into soft materials that results in a magnetisation profile with variable magnitude and direction, which further escort to various actuation modes such as bending, contraction/elongation, and deformation when exposed to an external magnetic field. An external magnetic field is used to magnetize the MAE actuators that are made with various concentrations of magnetic particles (Anon., 2020). The ability of magnetic fields to pierce a wide range of materials makes magnetic actuation a promising candidate for applications in confined areas, such as targeted drug delivery, microfluidics, and microsurgery, and it has been studied that magnetic actuators can attain fast response times of up to 100 Hz. Therefore, magnetic actuators have been thrivingly applied in the development of various crawling devices, swimmers, and micropumps (E. Diller, 2014).

In a recent study (Ganguly & Margel, 2023), experiments were conducted, and the results showed that the magneto-responsive soft gripper proved to be highly efficient in performing the intended tasks. By increasing the magnetic field strength or the magnetic particles' concentration, the gripping force can be increased. However, it was noted that the gripping force was prone to stabilize once the magnetic field strength reached 80 mT. Additionally, the response time of the magneto-responsive soft gripper was significantly shorter than the conventional driven robots while executing grasping motion.

Another significant study (Wang, et al., 2022) performed magnetic actuation using permanent magnets. They state that permanent magnets' one main advantage is that they can generate a static and

relatively strong magnetic field with negligible heat loss. Permanent magnets are generally used to generate large magnetic fields in commercial medical systems. Permanent magnet actuation systems provide complicated control processes thanks to their capability to produce magnetic torque coupled with a magnetic force.

Magnetic actuation via electromagnets is another way in this method. An electromagnet consists of a magnetic core placed within a solenoid, which provides regulation of the magnetic field's strength and direction according to the solenoid's current. In contrast to permanent magnets, electromagnets are easily controllable to generate magnetic fields, allowing them to be one of the main modes of magnetic actuation. Other advantages of electromagnets include a wider design range because of the variety of multi-axis coil configurations and greater control space due to their capability to produce complex magnetic fields by simply changing the coil's polarity without moving the coil set. Different spatial magnetic fields can be achieved by preparing various arrangements as multiple electromagnets can provide actuation forces in different directions. However, the magnetic coils are bulky and consume a lot of power, while the regions where the magnetic field is strong and controllable are usually small (Zhou, et al., 2017).

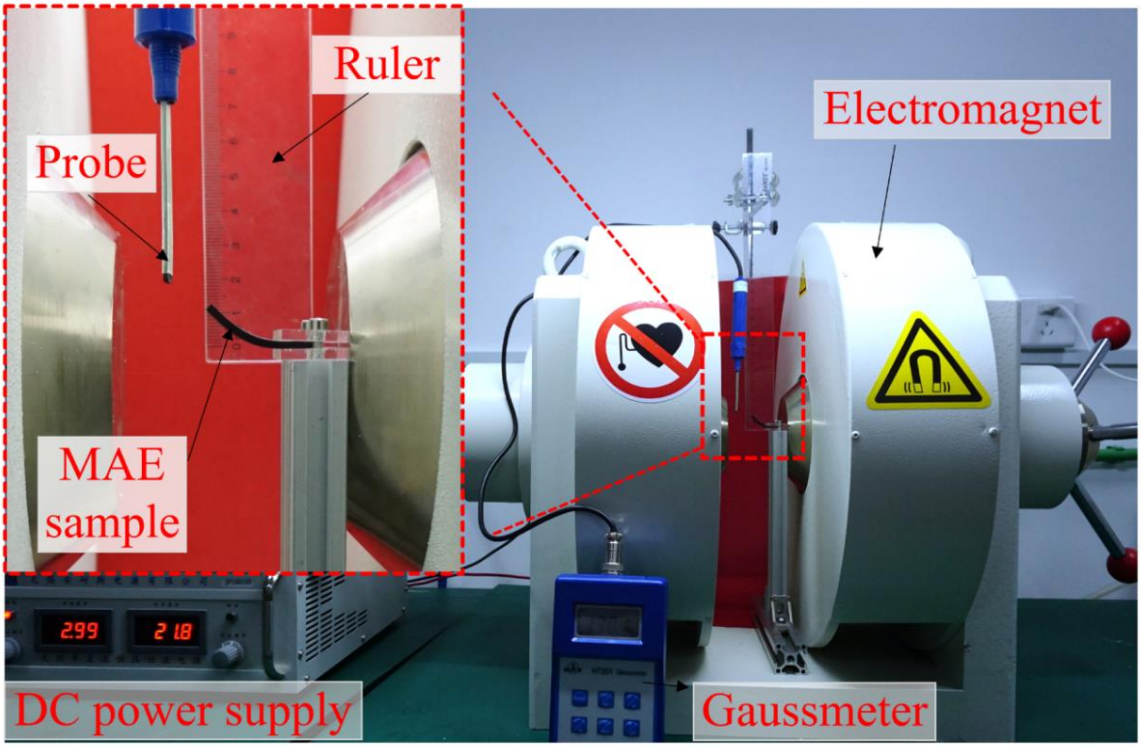

Figure 3: MAE in an external magnetic field generated by electromagnet (E. Diller, 2014)

Materials for Magnetic Soft Robotics

Polymers are commonly utilized as soft materials as they provide stiffness and flexibility. Because of its initial liquid state, silicone rubber is commonly utilized as the matrix material of MAEs, permitting the magnetic fillers to be fully suspended and homogeneously dispersed in the matrix through full agitation. The magnetic properties of MAEs are primarily determined by the coupling effect of the magnetic particles with the silicone rubber, as well as the interaction of the magnetic particles. Hard magnetic particles give advantages such as high residual induction, coercivity, and magnetic energy. Stronger magnetism occurs

when magnetic particles have a higher magnetic energy, thus MAEs that contain hard magnetic particles can retain strong magnetism and serve in severe environments of high-temperature or strong magnetic interference. MAEs sedated with hard magnetic particles show stronger remanence and create more force than soft magnetic particles under an external magnetic field. The soft elastomer containing magnetic particles can behave like a flexible magnet and produce magnetic force in a magnetic field.

When exposed to an external magnetic field, soft magnetic materials are able to get magnetized and demagnetized quite easily. Hence, soft magnetic materials are often used in reversible magneto-active composites such as magnetorheological fluids/elastomers (MRFs or MREs). Specifically, the magnetic domains in soft magnetic particles align along the direction of the magnetic fields, resulting in a high contact force. This magneto-induced deformation is referred to as “magnetostriction”. This ability of soft magnetic particles can be induced in a soft matric to precisely drive various forms of deformation/locomotion, such as bending, elongation and twisting. Soft magnetic materials generally include carbonyl iron (CI), iron oxide, soft ferrite, iron-silicon alloys, and iron-nickel alloys (Wang, et al., 2022).

Soft Materials

Soft robotics offer the ability to deform easily while maintaining mechanical resilience, adapting to the external environment without posing any threat to humans, and allow low-cost manufacturing. Active and soft materials show great promise for this task as they can be actuated by various external stimuli, like photons, thermal, magnetic and/or electric field (Julia A. Carpenter, 2021). These materials consist of particles, papers, shape memory alloys (SMAs), polymers (either electroactive or shape memory), fluids, liquid metals, hydrogels, 2D materials, and combinations thereof. Nevertheless, certain materials can be more well-suited for a specific set of applications; for example, materials actuated by near-infrared (NIR) light are used in biomedical applications, whereas materials actuated by sunlight are used for nature-inspired soft robots used in outdoor environments (Anon., 2020)

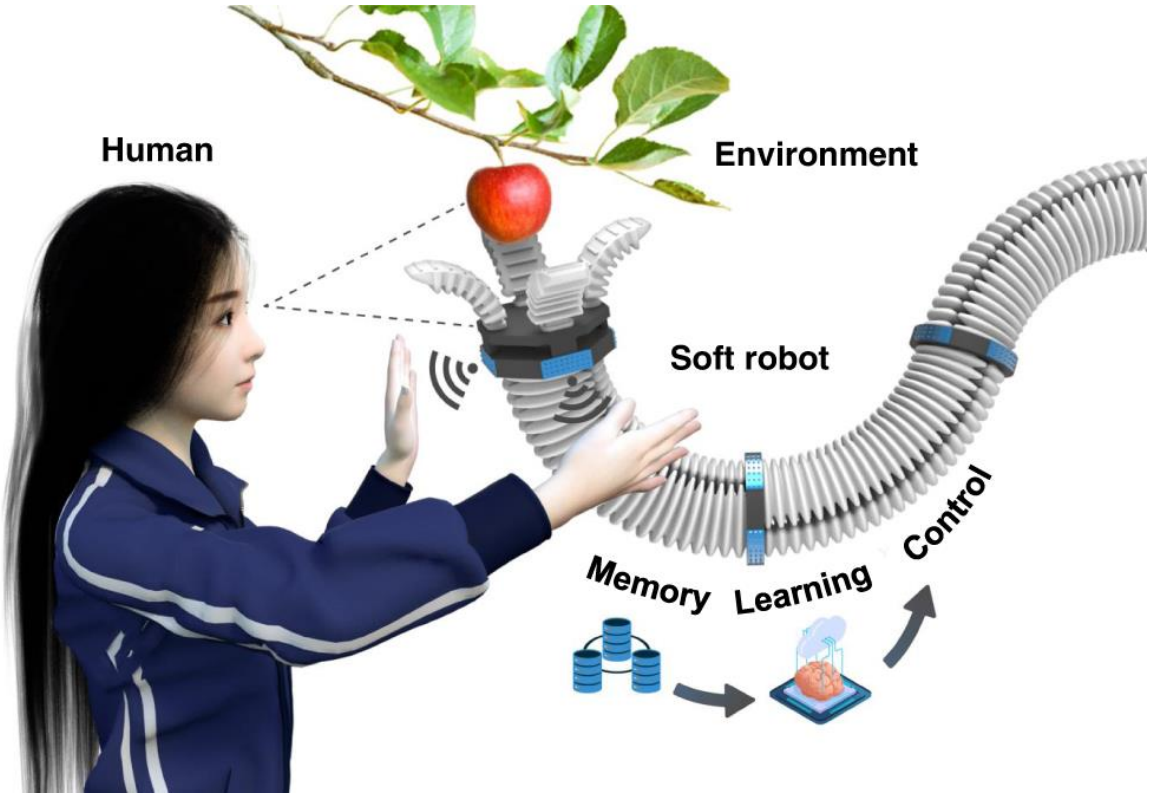

Figure 4: An example of the principle of touchless human-soft robot interaction based on flexible smart skin

Magnetic Particle Materials

In recent research (Julia A. Carpenter, 2021), several magnetic particles, their mechanical behavior, and deformation with silicone composites were studied. The experimental analysis used commercially available magnetic particles with three chemical compositions: neodymium iron boron (NdFeB), magnetite (Fe3O4), and strontium ferrite (SrFe19O20). Magnetite particles have spherical or rod-shaped morphology and have an average particle size of less than 1μm. These materials were able to form a homogeneous composite after they were added to the silicone resin. Magnetite and Strontium ferrite showed strong remanent magnetizations which indicates that the magnetic dipoles of these particles can comfortably orientated upon applications of magnetic fields and are maintained even after no magnetic field. It was discovered that the silicone films prepared with strontium ferrite particles outperform the other composites by showcasing both high compliance and high magnetic flux. The application of a magnetic field during the curing process of the soft magnetic mixture increased the remanent magnetization. In addition to magnetization during the curing process, another plan to enhance the magnetic responsiveness of the composite is to increase the magnetic particle concentrations incorporated into the silicone resin.

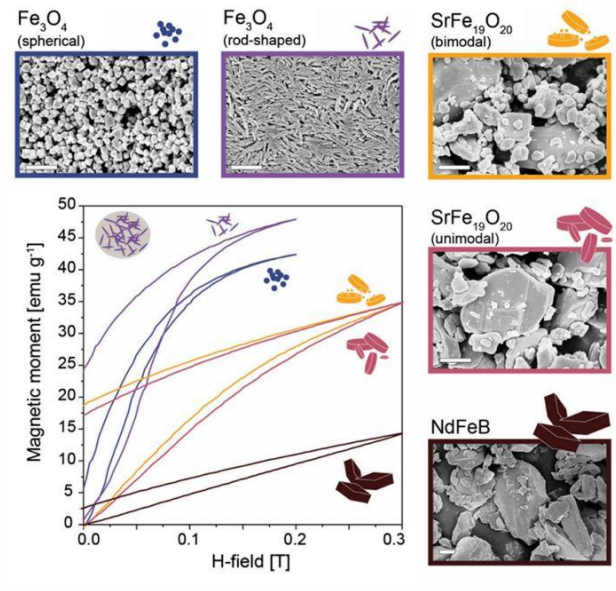

Figure 5: Magnetization curves obtained before moulding for silicone samples with magnetic particles of distinct chemical compositions (Julia A. Carpenter, 2021).

Methodology

This chapter presents the methodology used to design, develop and integrate the scaled-up prototype of the magnetic soft robotic gripper. The chapter include designing different types of moulds (based on discrete sizes and shapes) in which the grippers will be cured, FEA and FEM simulations of grippers, material and component selection, fabrication of the soft robotic gripper, and integrating mechanism and working of the gripper.

Design of the moulds

The mould design is created in SolidWorks. The mould design created in CAD software cannot be used directly by most 3D printers as they need specific design details in numerically controlled programming language that has accurate tool path information (F. Baumann, n.d.). 3D printers only work in STL format files therefore slicing software play an essential role in the process. SolidWorks software can save the designed model directly into STL format.

Four mould designs were created based on different sizes and shapes and then were analysed to find the optimum choice for the project application.

Mould for Gripper A features a symmetrical cross-shaped design ideal as a four-fingered soft robotic gripper. It’s the biggest one of all four designs in terms of size. The symmetry gives balanced distribution of force, providing stable and even gripping pressure from all sides.

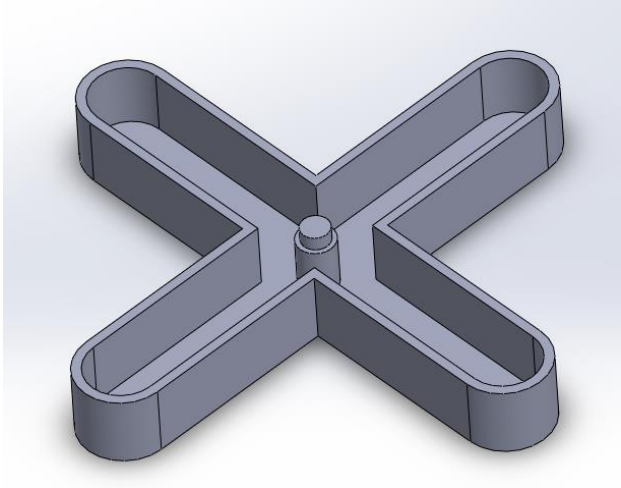

Figure 6: CAD model for mould of Gripper A

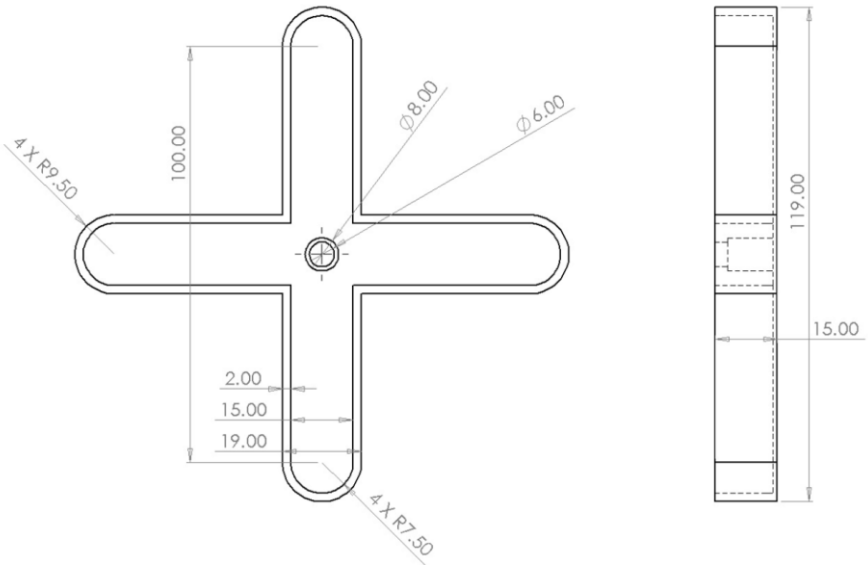

Figure 7:Sketch of the mould A with dimensions in mm

Mould for Gripper B features asymmetrical curve cross-shaped design. The design has four fingers of varying lengths and curvatures, enabling versatile gripping capability and adaptability for handling various object shapes and sizes. This design has two longer and two shorter fingers.

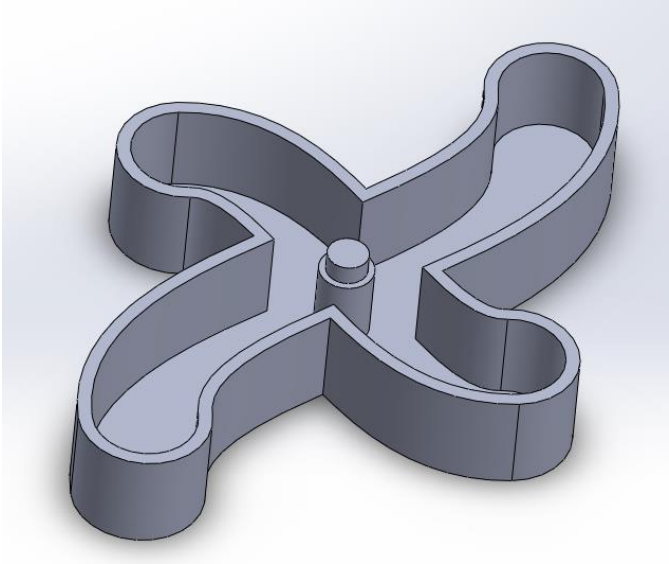

Figure 8: CAD model for mould of Gripper B

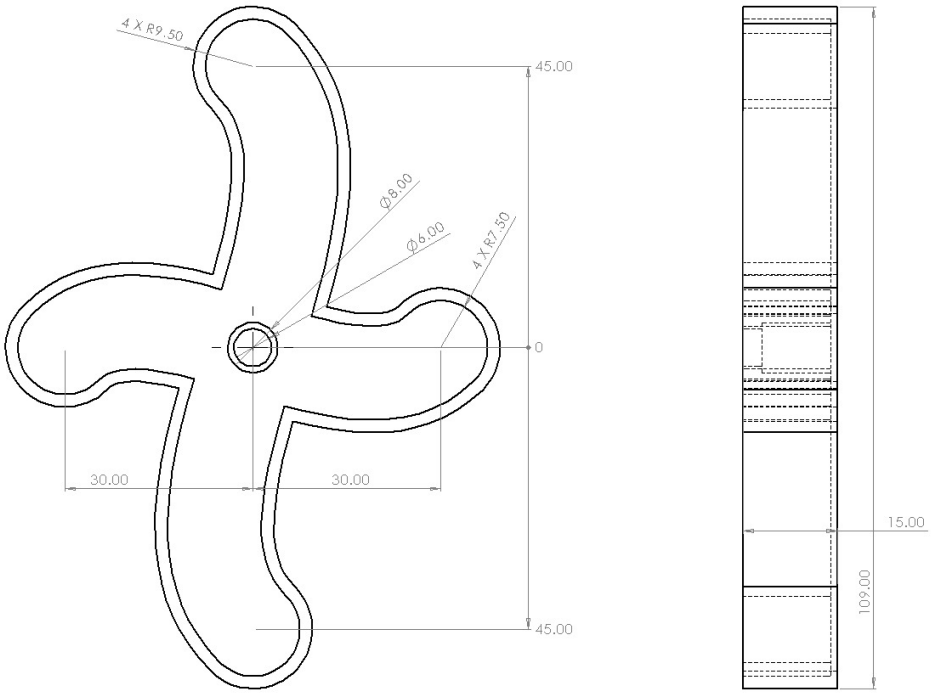

Figure 9: Sketch of the mould B with dimensions in mm

Mould for Gripper C features claw-shaped design. The design has three identical fingers but is much lesser in thickness compared to the last two moulds, enabling better manipulation of the soft gripper with respect to the magnetic field generated by the permanent magnet. Claw-shape offers excellent adaptability for grasping various object shapes and sizes.

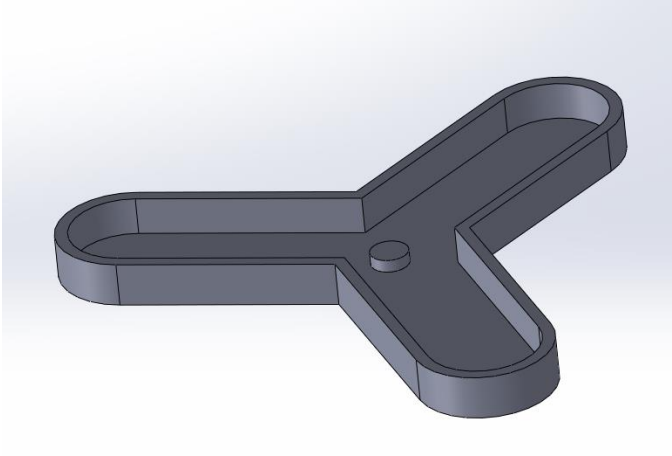

Figure 10: CAD model for mould of Gripper C

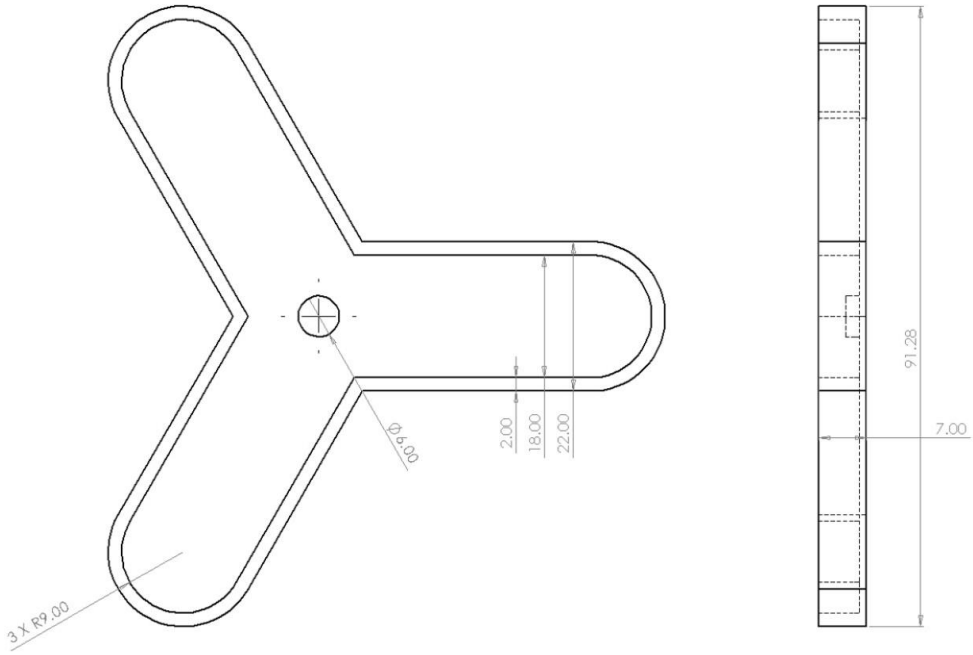

Figure 11: Sketch of the mould C with dimensions in mm

Mould for Gripper D features similar design to gripper C but without the rounded edges. Also, the size of this design is the smallest among all the other designs. The mould's overall size is relatively like the size of the permanent magnet. This size allows the magnetic field generated by the permanent magnet to effectively influence the entire gripper structure.

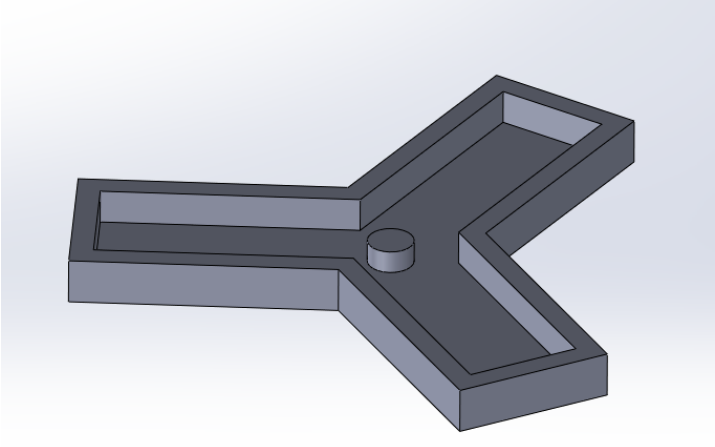

Figure 12: CAD model for mould of Gripper D

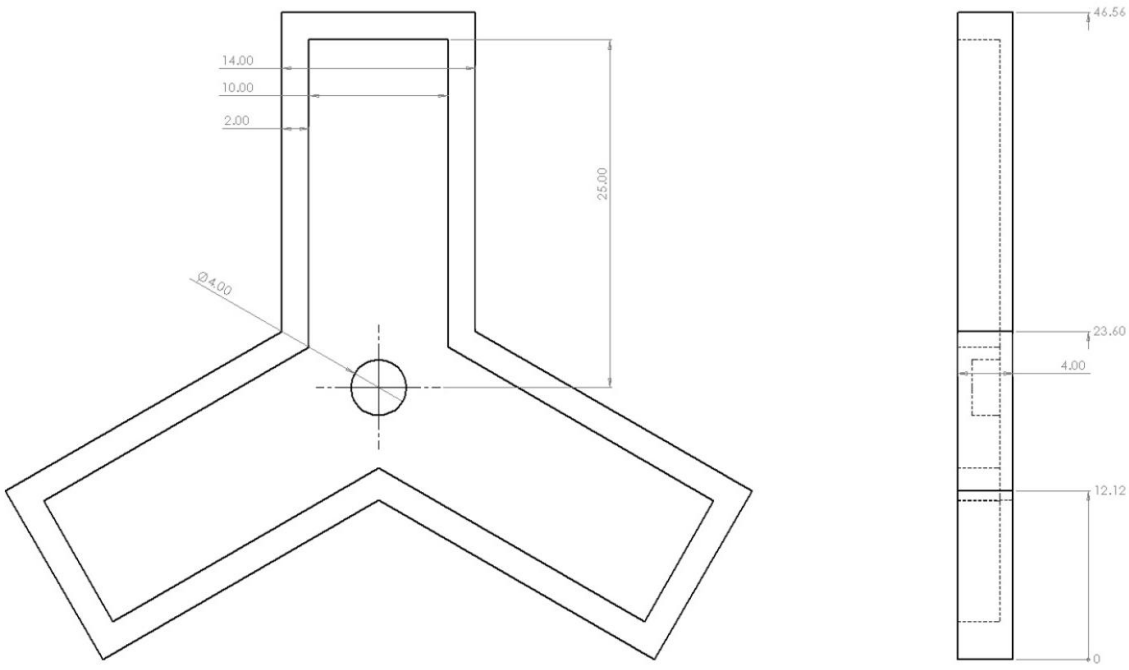

Figure 13: Sketch of the mould D with dimensions in mm

FEA and Magnetic FEM Simulation

Several methods are available for assessing the performance of a system. Finite Element Analysis (FEA) is the simplest and most effective way to analyze the behaviour of the structure. FEA is a powerful numerical technique that predict and mimics how the system would respond to various forces, loads, and external conditions (S. Bhavikatti, 2005). FEA provides in-depth insight about the stress distribution, deformation and potential breaking points within the structure. Magnetic Finite Element Method (FEM) simulation is important as well because it addresses electromagnets, electrostatic, and magnetostatic problems and predicts the effect of magnetic field distribution and strength, enabling to visualize how the soft robotic gripper will behave near the permanent magnet. This helps in finding the appropriate magnetite concentration, gripper geometry, and magnet placement for improved and efficient results (Anon., n.d.).

For this project, Ansys software was used for FEA and specifically Ansys Maxwell for magnetic FEM simulation. The simulation in Ansys commences with the conversion of the soft robotic gripper's design into

a digital model, followed by creation of finite element mesh that divides the structure into discrete elements for analysis. Then material properties, boundary conditions, and external loads are applied to replicate real-world scenarios. For FEM simulation, permanent magnet design is also incorporated along with the gripper design. All types of grippers were analysed with FEA and FEM simulations.

As the soft robotic gripper is a composite mixture of two different materials, therefore the new material properties were calculated and assigned during both the simulation process.

Material Properties given to the composite mixture are:

- **<u>Relative Permeability</u>**

  It is calculated through Bruggeman Equation ((Choy, n.d.)

  $f1 * (\varepsilon 1 - \varepsilon eff) / (\varepsilon 1 + 2\varepsilon eff) + f2 * (\varepsilon 2 - \varepsilon eff) / (\varepsilon 2 + 2\varepsilon eff) = 0$

  where:

  $f1$ = volume fraction of Ecoflex

  $f2$ = volume fraction of magnetite

  $\varepsilon 1$ = relative permeability of Ecoflex which is 1

  $\varepsilon 2$ = relative permeability of magnetite which is 5

  εeff = relative permeability of the composite material

  1. For 67% Ecoflex, 33% Magnetite:

  $0.67 * (1 - \varepsilon eff) / (1 + 2\varepsilon eff) + 0.33 * (5 - \varepsilon eff) / (5 + 2\varepsilon eff) = 0$

  Solving numerically gives $\varepsilon eff \approx 2.04$

  2. For 50% Ecoflex, 50% Magnetite:

  $0.5 * (1 - \varepsilon eff) / (1 + 2\varepsilon eff) + 0.5 * (5 - \varepsilon eff) / (5 + 2\varepsilon eff) = 0$

  Solving numerically gives $\varepsilon eff \approx 2.47$

  3. For 33% Ecoflex, 67% Magnetite:

  $0.33 * (1 - \varepsilon eff) / (1 + 2\varepsilon eff) + 0.67 * (5 - \varepsilon eff) / (5 + 2\varepsilon eff) = 0$

  Solving numerically gives $\varepsilon eff \approx 3.65$

- **<u>Density</u>**

  It is calculated by the rule of mixtures ((Callister, n.d.)

  $\rho_composite = f1 * \rho_ecoflex + f2 * \rho_magnetite$

where:

f1 = volume fraction of Ecoflex

f2 = volume fraction of magnetite

ρ_Ecoflex = density of Ecoflex which is 1070 kg/m³

ρ_Magnetite= density of magnetite which is 5150 kg/m³

ρ_composite = density of the composite material

1. For 67% Ecoflex, 33% Magnetite:

ρ_composite = 0.67 * 1070 + 0.33 * 5150

Solving numerically gives ρ_composite ≈ 2416 kg/m³

2. For 50% Ecoflex, 50% Magnetite:

ρ_composite = 0.5 * 1070 + 0.5 * 5150

Solving numerically gives ρ_composite ≈ 3110 kg/m³

3. For 33% Ecoflex, 67% Magnetite:

ρ_composite = 0.33 * 1070 + 0.67 * 5150

Solving numerically gives ρ_composite ≈ 3803 kg/m³

- **<u>Young's Modulus</u>**

It is calculated by the rule of mixtures ((Callister, n.d.)

E_composite = f1 * E_ecoflex + f2 * E_magnetite

where:

f1 = volume fraction of Ecoflex

f2 = volume fraction of magnetite

E_Ecoflex = Young's modulus of Ecoflex which is 0.000069 GPa

E_Magnetite= Young's modulus of magnetite which is 178 GPa

E_composite = Young's modulus of the composite material

1. For 67% Ecoflex, 33% Magnetite:

E_composite = 0.67 * 0.000069 + 0.33 *178

Solving numerically gives E_composite ≈ 58.74 GPa

2. For 50% Ecoflex, 50% Magnetite:

E_composite = 0.5* 0.000069 + 0.5 *178

Solving numerically gives E_composite ≈ 89 GPa

3. For 33% Ecoflex, 67% Magnetite:

E_composite = 0.33 * 0.000069 + 0.67 *178

Solving numerically gives E_composite ≈ 119.26 GPa

- **<u>Poisson's Ratio</u>**

It is calculated by the rule of mixtures ((Callister, n.d.)

v_composite = f1 * v_ecoflex + f2 * v_magnetite

where:

f1 = volume fraction of Ecoflex

f2 = volume fraction of magnetite

v_Ecoflex = Poisson's ratio of Ecoflex which is 0.49

v_Magnetite= Poisson's ratio of magnetite which is 0.3

v_composite = Poisson's ratio of the composite material

1. For 67% Ecoflex, 33% Magnetite:

v_composite = 0.67 * 0.49 + 0.33 *0.3

Solving numerically gives v_composite ≈ 0.42

2. For 50% Ecoflex, 50% Magnetite:

v_composite = 0.5 * 0.49 + 0.5 *0.3

Solving numerically gives v_composite ≈ 0.395

3. For 33% Ecoflex, 67% Magnetite:

v_composite = 0.33 * 0.49 + 0.67 *0.3

Solving numerically gives v_composite ≈ 0.36

Material properties for the permanent magnet were taken from the inbuilt magnet properties in ansys maxwell.

Materials and Components Selection

Material for 3D Printing

Various materials are used in 3D printing-compliant mechanisms. Options include plastic, powders, resins, metals, and carbon fibre. Out of all these materials, plastic is the most commonly used material for 3D printing. In this project, the 3D printing technique is used just to create a mould in which the composite mixture of Ecoflex 00-50 and magnetite will be cured, so plastic is the optimum selection as it is a relatively affordable option. Acrylonitrile butadiene styrene (ABS), Polylactic acid (PLA), Polyvinyl alcohol plastic (PVA), and Polycarbonate (PC) are among the often-used types of plastic (Anon., n.d.). ABS, PVA, and PC are not suitable for our cause due to their material properties and limitations. ABS has low chemical resistance and a high warping rate, making it unsuitable for durable moulds (Anon., n.d.). PVA is water-soluble, resulting in poor structural integrity in mould applications (Anon., n.d.). Polycarbonate (PC) has high melting point, making it tough to print without specialized equipment (Anon., n.d.)

In comparison to the above options, PLA come up to be the ideal material for 3D printing the required components. PLA has strong mechanical properties, such as high stiffness, good flexural strength, and the ability to undergo elastic deformation before failure. The properties of PLA are listed below (Anon., n.d.)

Characteristics	Value
Tensile Strength	59 MPa
Elongation at break	7 %
Elastic Modulus	3500 MPa
Shear Modulus	1287 MPa
Poisson's ratio	0.36
Yield strength	70 MPa
Flexural strength	106 MPa
Ultimate tensile strength	73 MPa
Percent of elongation	11.3 %
Youngs modulus	1280 MPa

Table 1: Mechanical properties of PLA

The advantages of PLA are:

- Good Strength
- High heat stability
- Flexible
- Low cost

- Easy to use
- Less prone to warping while printing

Permanent Magnet

A permanent magnet is used in the project as a key control component, directing the soft robotic gripper's actuation for fine manipulation. To start the compliant mechanism's gripping action, a permanent magnet is fixed and the gripper which is movable is brought closer to the fixed magnet, thereby initiating the gripping action.

A high strength neodymium permanent capable to generate the required magnetic field for actuating the soft robotic gripper must be utilized. For the purpose of this project, Eclipse Neodymium Magnet from RS Components was used. It has following specifications:

Attribute	Value
Magnet Type	Shallow Pot
Width/Diameter	48mm
Thread Size	M8
Pull Force	75kg
Thickness	11mm
Attachment Type	Screw

Table 2: Properties of the permanent magnet (Anon., n.d.)

This powerful rare earth magnet was opted for its compact size but high magnetic field strength, which is important for attaining effective actuation in confined spaces. The shallow pot design offers a concentrated magnetic field on one face, ideal for our purpose where unidirectional force is required. The 75 kg or 735.5 N pull force provides strong magnetic field which enables the gripper actuation.

Magnetic Particle Material

Another very important part of this project is to select an appropriate magnetic particle material that will be embedded within the silicone polymer and will be crucial in the actuation of the soft robotic gripper. Ferrite particles are usually utilized as magnetic additions because of their low residual and high permeability as well as highly saturated magnetization.

There are several commercially available magnetic particles with different chemical compositions and offer variety of properties. Some of them are Strontium Ferrite (SrFe19O20), Magnetite (Fe3O4), and Neodymium iron boron (NdFeB). Strontium Ferrite (SrFe19O20) encase high compliance and high magnetic flux density and outperforms the other two options but its only drawback here is that it is the costliest than the others. NdFeB has low remanent magnetization. Magnetite particles fall in between the two and is selected for implementation. Magnetite has remanent magnetization of 25 emu/g. The strong remanent magnetization observed in the magnetite particles indicate that the magnetic dipoles can be easily orientated when under magnetic field.

The selected Magnetite particles have physical state in fine powder form which allows for uniform dispersion within the silicone polymer ensuring consistent magnetic properties throughout the composite material. Magnetite also possesses high density which is essential to enhance the gripper's stability and provides a quality feel to the final product ((Ramanujan, n.d.).

Figure 14: Magnetite particle powder (Anon., n.d.)

Soft Material

For the elastomeric matrix of the soft robotic gripper, Ecoflex 00-50, a platinum catalyzed silicone rubber produced by Smooth-On, Inc was selected. It has two components A and B, which are mixed in a 1:1 ratio by volume or weight. Ecoflex 00-50 provides exceptional flexibility and elongation properties. Its high elongation at break gives enough deformation without failure, which is necessary for strain experienced during magnetic actuation. It has Cure Time of 2-3 hours at room temperature. Advantages of Ecoflex 00-50 are:

- High tear strength
- Nontoxic
- Thermal and chemical stability

- Excellent dielectric behavior

Figure 15: Ecoflex 00-50

Fabrication of the Soft Robotic Gripper

The soft robotic gripper is fabricated by curing into a mould which is created using the latest 3D printing technology called Fused Deposition Modelling (FDM). In this process, the printing material is inserted in the form of a wire, called filament, into the 3D printer. The filament goes through controlled melting and accurate extrusion through a small nozzle onto the printing board, enabling the gradual layer-by-layer forming of a solid model ((B. Mueller, n.d.). The 3D printing process consists of three steps: firstly, the designing of the mould; secondly, the model's division into distinct layers, known as slicing; and lastly, the diligent printing stage where the printer follows the slicing instructions to construct the mould. And once the mould is created the composite mixture of Ecoflex 00-50 and magnetite is poured into it and cured. The following points are the step process of the fabrication of the soft robotic gripper after the moulds are designed:

1. Slicing

Slicing is the computation of printer tool paths from a 3D model file. Variety of software are available to perform slicing operation such as, Cura, RepSnapper, MiraclGru/Makerware, and Skeinforge to name a few ((F. Baumann, n.d.). For this project, UltiMaker Cura version 5.3.1 is used for the slicing purpose.

The STL-formatted gripper model is imported into the UltiMaker Cura software and then Cura interface's drop-down list is utilized to select the 3D printer machine model and the printing material. Cura can tune-in parameters like layer thickness, temperature, infill density, etc. using the information based on the print quality that is chosen. Cura offers four different quality level: low, standard, dynamic, and super. Several modifications can be made to the print quality to save printing time. The printing parameters opted for the mould design are shown in Table below.

UltiMaker Cura Slicer Settings			
Printer	: Creality Ender 3	Top layers	: 6
Material	: PLA	Bottom layers	: 6
Nozzle size	: 0.4 mm	Infill density	: 20 %
Quality	: Standard	Infill pattern	: Gyroid
Printing temperature	: 203 ^{0}C	Print speed	: 50 mm/ sec
Build plate temperature	: 60 ^{0}C	Top/ bottom speed	: 25 mm/ sec
Layer height	: 0.4 mm	Travel speed	: 150 mm/sec
Line width	: 0.4 mm	Cooling	: Enabled
Top layer thickness	: 1.2 mm	Support	: Touching build plate
Bottom layer thickness	: 1.2 mm	Support pattern	: Zig Zag

Table 3: UltiMaker Cura print settings

2. 3D Printing

The moulds are built through 3D printing via fused deposition modeling (FDM) technology. PLA filament is selected for this process. The filament undergoes melting within the heated print head and is then accurately extruded through the nozzle onto the build plate. The G code created via slicer is used to control the movement of the print head to create the designed model. PLA filament specifications and requirements are listed below.

Characteristics	Description
Material	PLA
Colour	Black
Diameter	1.75 mm
Accuracy	+/- 0.03 mm
Nozzle temperature	190 – 220 ^{0}C
Bed temperature	25 – 60 ^{0}C
Length	340 – 350 m
Weight	1 Kg

Table 4: Specifications and requirements of the PLA filament for 3D printing

The Creality Ender 3 printer which has a 0.4mm nozzle, is employed for printing process. The nozzle is preheated above the melting point of the PLA filament that ranges from 190°C to 220°C. Once preheating is done, filament is inserted into the print head and the G code controls the movement of the print head and the build plate. The build plate moves along the Y axis and the print head moves along the X and Z axis to create the desired model. The printer's specifications are listed below.

Characteristics	Description
Size	516 x 582 x 590 mm
Build volume	220 x 220 x 250 mm
Weight	10.3 Kg
Print speed	< 120 mm/s
Precision	+/- 0.1 mm
Layer height	0.05 – 0.35 mm
Filament diameter	1.75 mm
Nozzle diameter	0.4 mm
Nozzle temperature	Up to 260 ^{0}C
Bed temperature	Up to 110 ^{0}C

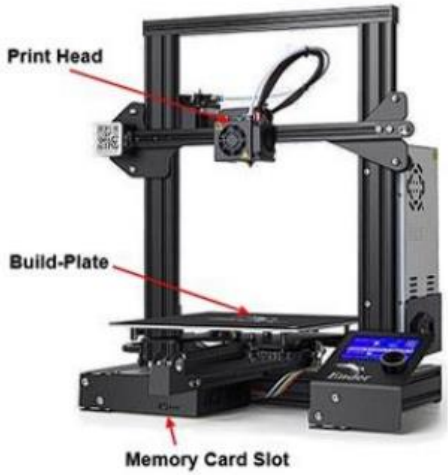

Table 5: Specifications of Ender 3

The 3D printing took around 2 hours to create the bigger moulds and the smaller ones took less than 1 hour to finish. Upon the completion, the product is detached from the build plate by a steel scraper and the supporting structures were removed carefully. The completed 3D printed moulds are shown below.

Figure 16: 3D printed moulds A, B, C, and D respectively

3. Making of the Composite material and Soft Robotic Gripper

As stated above Ecoflex 00-50 is used as a soft material, comprising a two-part mixture involving a base and a hardener. These two are to be mixed in 1:1 ratio either by weight or volume as per the manufacturer's instructions. Once both are put in a container then magnetite particle powder is added in it. For all moulds, different concentrations of magnetite with respect to Ecoflex 00-50 are employed.

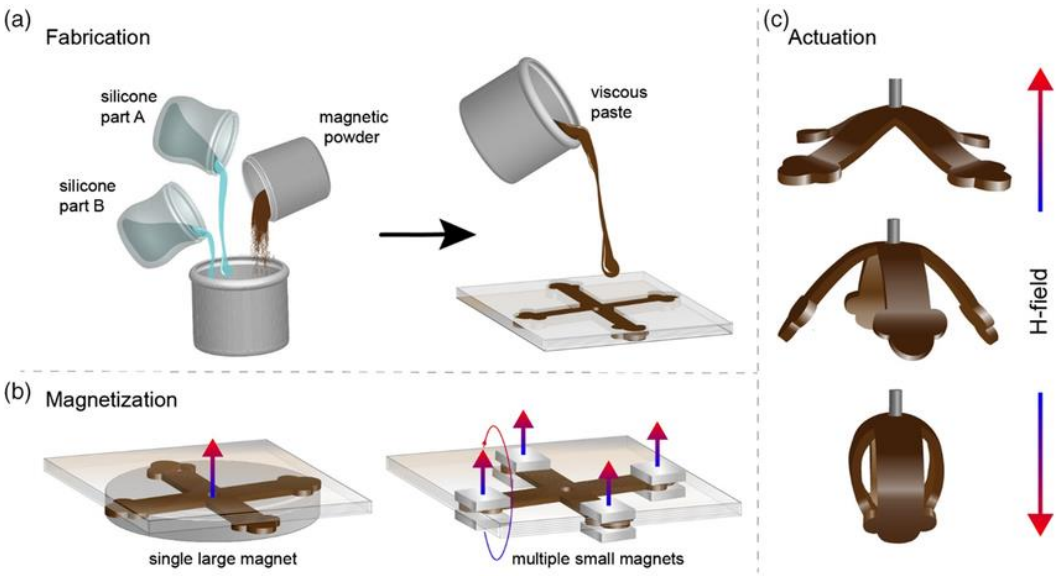

Figure 17: A schematic of the manufacturing, magnetization, and actuation of silicone parts loaded with magnetic particles. a) soft things are created by combining magnetic powder with a two-part silicone resin. The resulting viscous paste can be cast straight into molds to produce actuators with precise geometry. b) The actuators are magnetized by placing magnets in particular spots during or after the silicone resin has cured. c) The actuators are triggered by an external magnetic field. Motion comes from the interaction between the applied magnetic field, the magnetized domains of the actuator, and the gravity forces .

For Gripper A, the concentration percentage of Ecoflex 00-50 to Magnetite was kept 67% to 33%.

For Gripper B, an equal concentration percentage of Ecoflex 00-50 to Magnetite was mixed.

For Gripper C and D, the concentration percentage of Ecoflex 00-50 to Magnetite was 33% to 67%.

It was noticed that the higher is the concentration of magnetite, the more viscous is the mixture. The container with the mixture was then introduced to THINKY ARE-250 centrifugal mixer for mixing and degassing process.

Figure 18: THINKY ARE 250 Centrifugal mixer (Anon., n.d.)

This centrifugal mixer is set to function at a speed of 2000 rpm for 1.5 minutes for mixing and 2200 rpm for 2 minutes for degassing (removal of trapped air) process. The resulting mixture is then poured into the moulds and are then left to cure. During curing, small magnets were placed at the tips of the fingers to magnetize the gripper by allowing better alignment of the magnetic particles. Once cured, the soft robotic gripper is then carefully peeled off. The final results are shown below.

Figure 19: Cured soft robotic gripper A, B, C, and D respectively

Integration of Components & Working

A mechanism setup is created by 3D printing in which the permanent magnet is fixed on one side and on the other side, the soft robotic gripper is attached to a rod that moves back and forth bringing the gripper close or away to the permanent magnet.

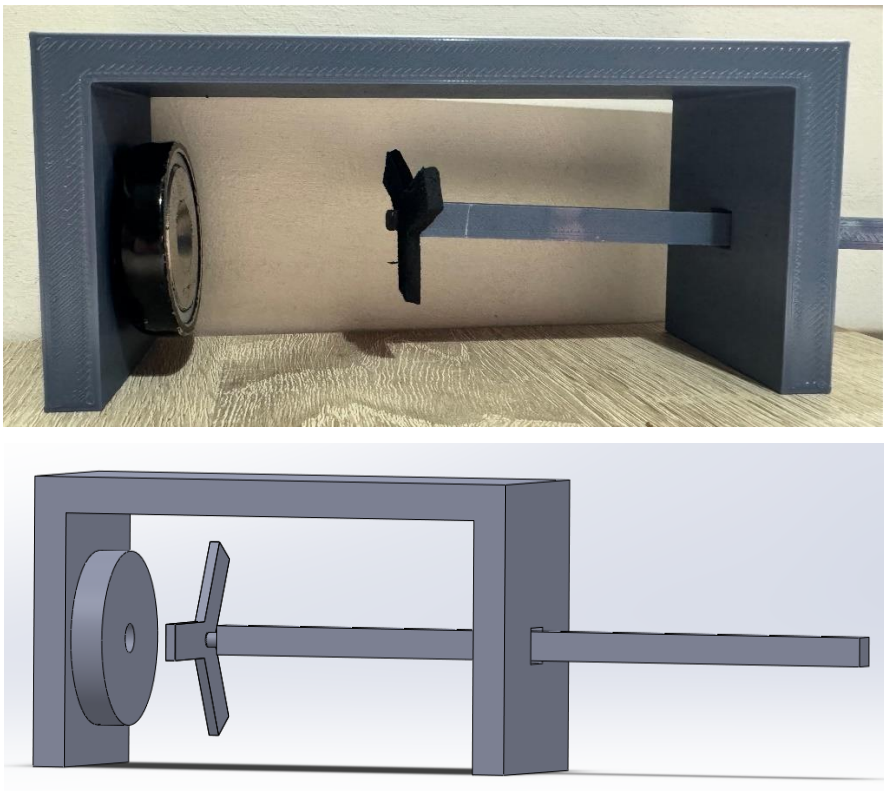

Figure 20: Complete mechanism of soft robotic gripper actuation

As the rod on which the soft robotic gripper is attached moves closer to the permanent magnet, it gets actuated and closes its fingers, and as the rod moves away, it opens again. When the gripper is close to the permanent magnet and grasps an object, it can be lifted by tilting the rod down.

Results

This section of the dissertation presents a comprehensive research and analysis of the soft robotic gripper's performance and functionality, encompassing two pivotal areas: the outcomes of FEA & FEM simulation and the gripper's functionality tests.

Results of FEA & FEM Simulation in Ansys

The Finite Element Analysis (FEA) of Soft Robotic Gripper analyzed three key aspects: total deformation, equivalent elastic strain, and equivalent stress. FEA and FEM results are discussed in detail.

Soft Robotic Gripper A

The simulation shows a maximum deformation of 1.5818e-5 m from actual state occurring at the tips of the gripper fingers with a gradient from maximum (red) at the tips to minimum (blue) at center.

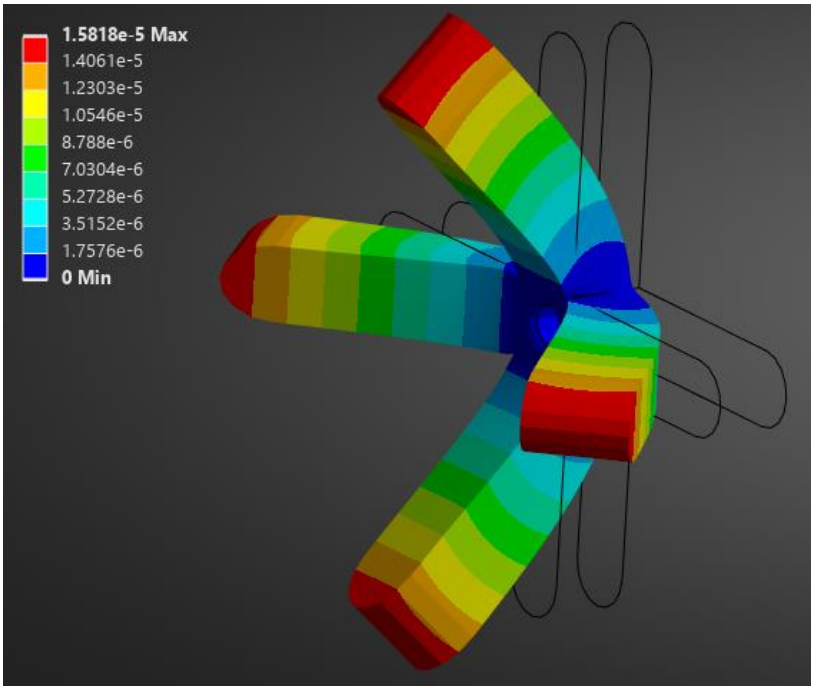

Figure 21: Total deformation in Gripper A

The equivalent elastic strain distribution disclose a maximum strain of 0.00022588 at the central hub of the gripper. The strain slowly decreases along the length of the finger, with minimum at the tips. This indicates that there is a potential stress point at the center and implies that the material experiences the most deformation at the gripper's base.

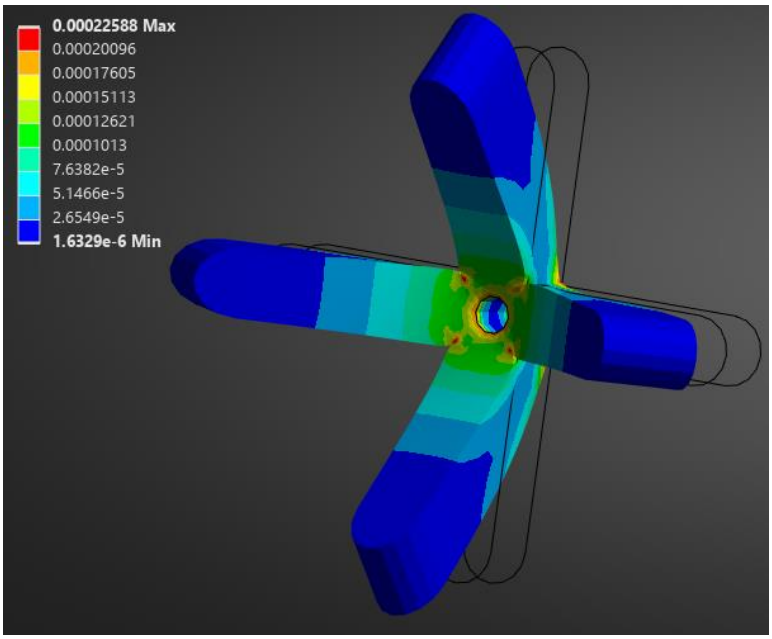

Figure 22: Equivalent elastic strain distribution in Gripper A

The stress analysis reveals a maximum equivalent stress of 1.261e7 Pa also intense at the center point of the gripper. This stress distribution corelates with the equivalent elastic strain pattern, affirming that the base of the gripper fingers experiences the most mechanical load during actuation.

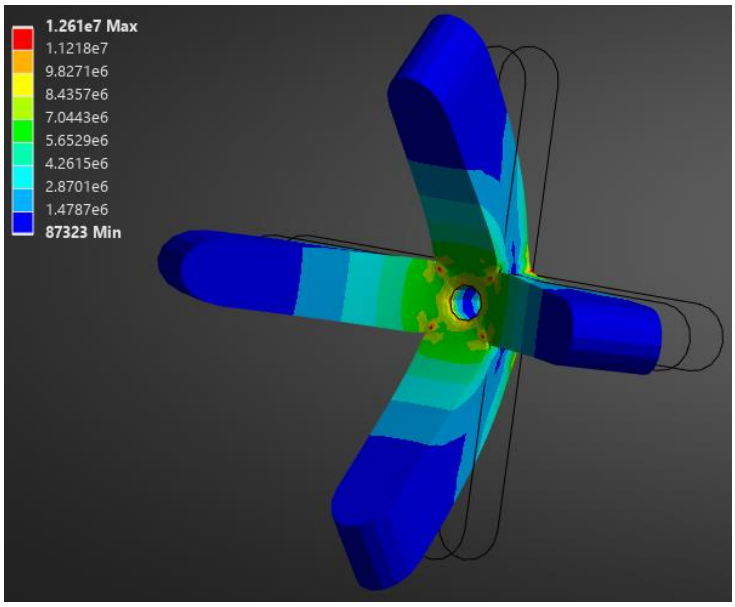

Figure 23: Equivalent stress distribution in Gripper A

The magnetic flux simulation shows a decent magnetic field generated by the permanent magent, with a maximum flux density of 875.827 mT. The field lines are dispersed and not very concentrated. The big size and low concentration of magnetite reveals that the gripper A is not compatible with our purpose as it doesn't show effective results.

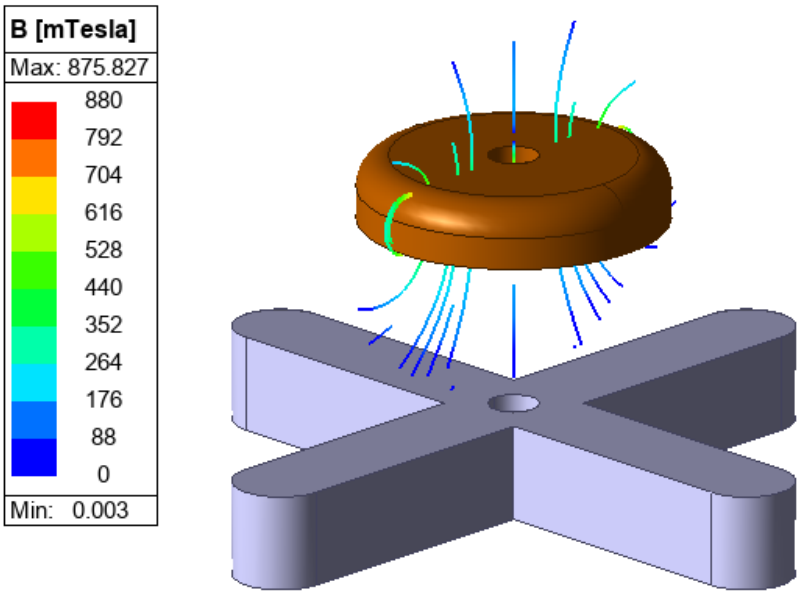

Figure 24: Magnetic flux distribution in Gripper A

Soft Robotic Gripper B

The simulation shows a maximum deformation of 1.181e-5 m from actual state occurring at the tips of the gripper fingers with a gradient from maximum (red) at the tips to minimum (blue) at center. Due to the asymmetric design of this gripper, the longer fingers exhibit greater bending than the shorter ones. This asymmetric deformation could be advantageous in grasping complex tasks.

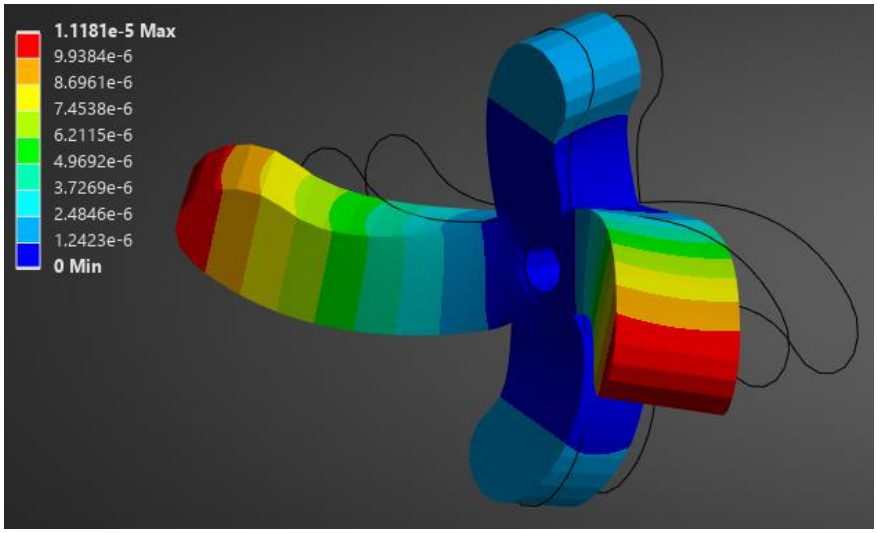

Figure 25: Total deformation in Gripper B

The equivalent elastic strain distribution disclose a maximum strain of 0.00015744 at the central hub of the gripper. The strain slowly decreases along the length of the finger, with minimum at the tips similar but lower to gripper A. Hence, indicates improved distribution of internal forces.

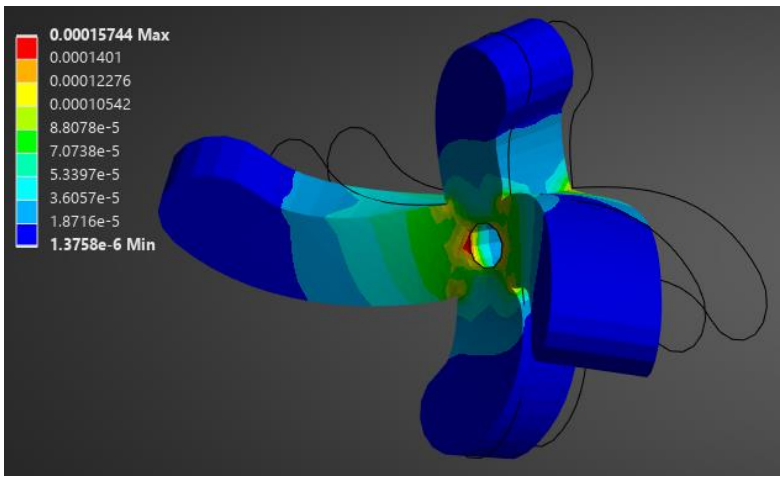

Figure 26: Equivalent elastic strain distribution in Gripper B

The stress analysis reveals a maximum equivalent stress of 1.3489e7 Pa, a bit higher than gripper A. The stress in this is also intense at the center point of the gripper. Again because of asymetry the stress distribution is non-uniform and certain sections experience high stress levels.

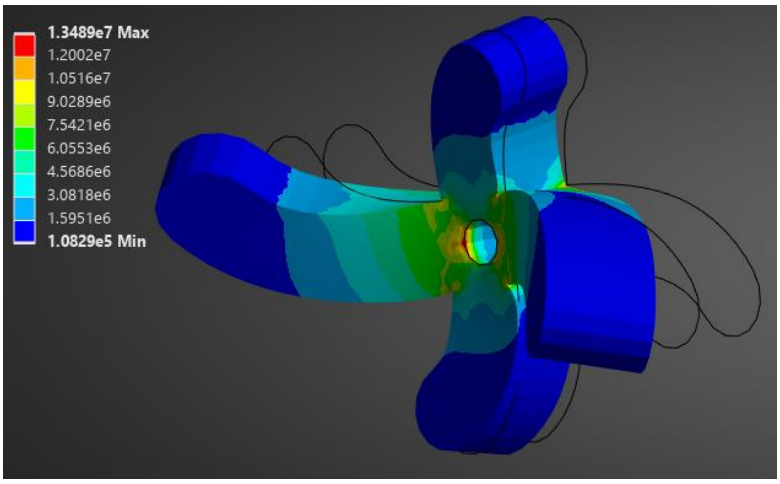

Figure 27: Equivalent stress distribution in Gripper B

The magnetic flux simulation discloses a strong magnetic field generation, with a maximum flux density of 934.182 mT. The field lines are dense and show good interaction with gripper structure especially at the fingertips closest to the permanent magnet.

Similar dimensions but asymmetric design suggest that this design can be used in complex tasks, but it is not for a simple common object grasping and equal concentrations of magnetite and ecoflex allows a better magnetic flux interaction. But this still is not enough to meet our desired results.

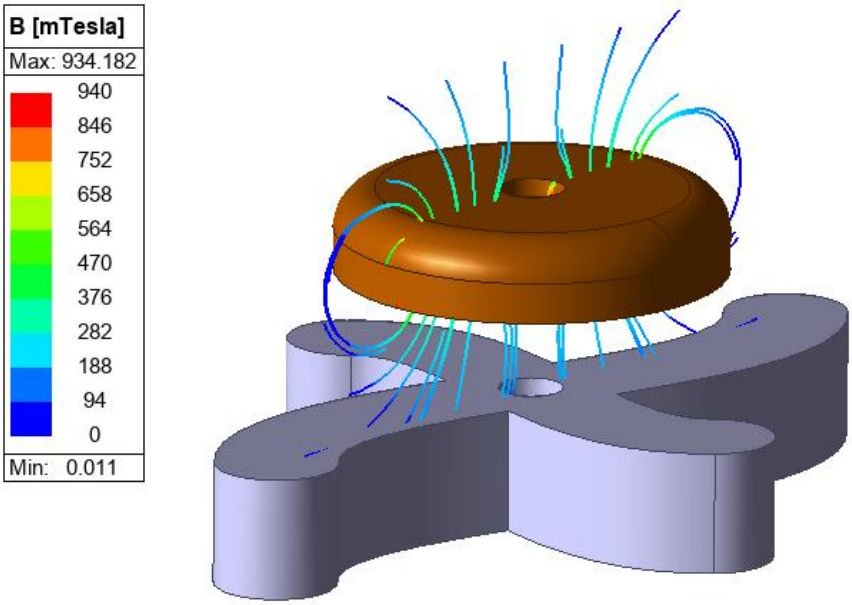

Figure 28: Magnetic flux distribution in Gripper B

Soft Robotic Gripper C

The simulation shows a maximum deformation of 7.856e-5 m from actual state occurring at the tips of the gripper fingers with a gradient from maximum (red) at the tips to minimum (blue) at center. The deformation is significantly higher than the previous two grippers. The deformation pattern is uniform throughout the structure ensuring a more flexible and potentially more adaptive structure.

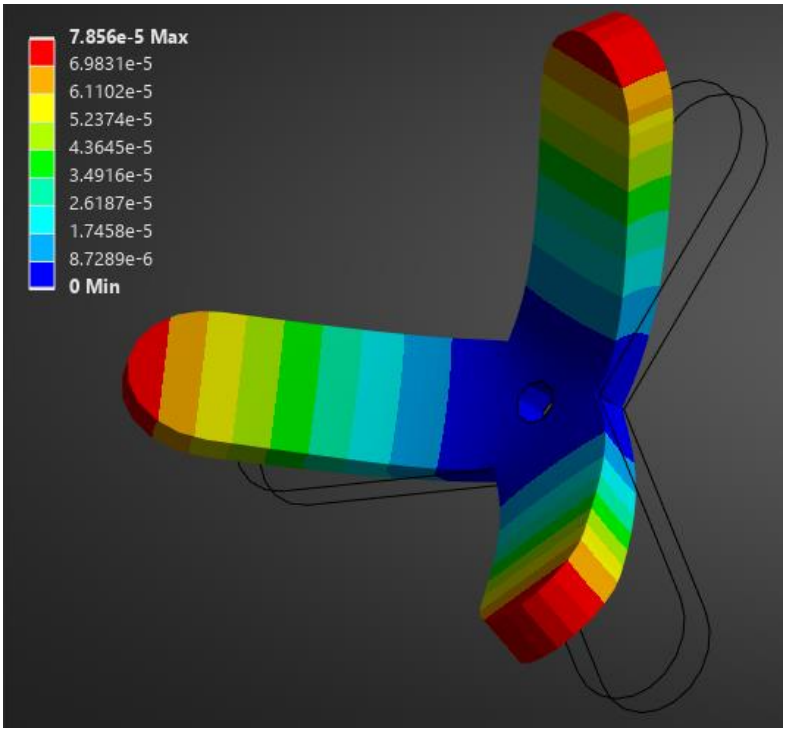

Figure 29: Total deformation in Gripper C

The equivalent elastic strain distribution disclose a maximum strain of 0.00064314 at the central hub of the gripper substantially higher than previous designs. This distribuiton reveals that the material is being utilized more efficiently through out the structure, leading to better responsive actuation.

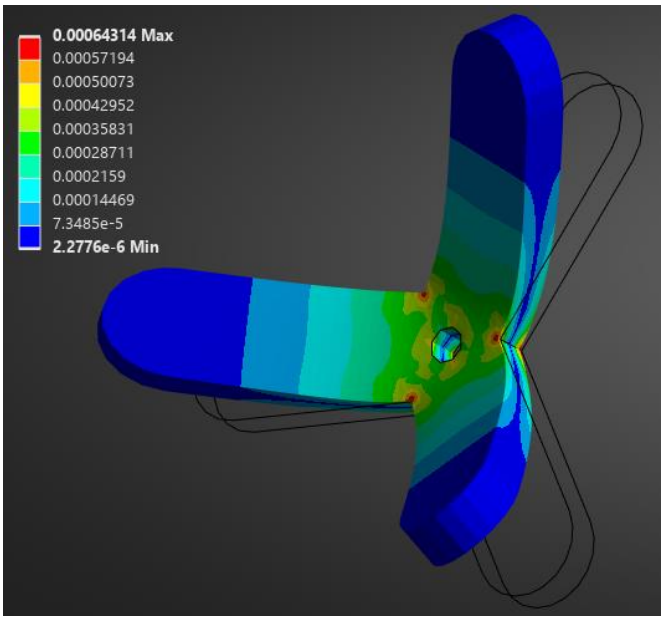

Figure 30: Equivalent elastic strain distribution in Gripper C

The stress analysis reveals a maximum equivalent stress of 7.4417e7 Pa, substantially higher than gripper A and B. The stress distribution suggest that the structure is transmitting forces successfully to create the desired bending motion. The higher stress levels also indicates that the gripper is competent of exerting stronger gripping force.

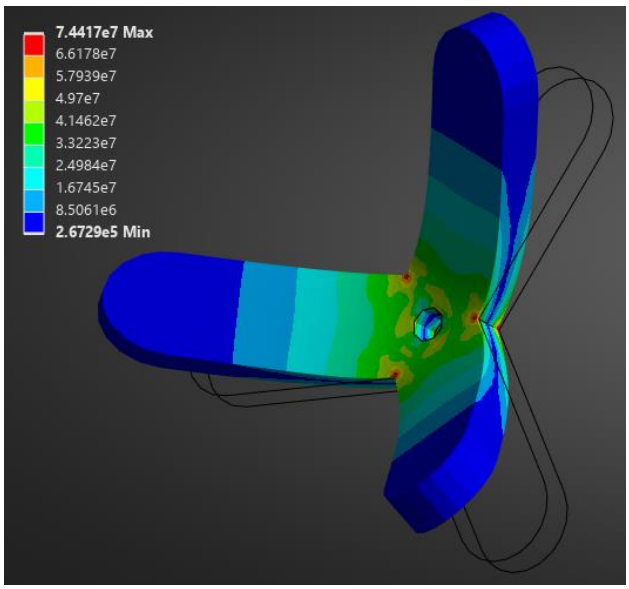

Figure 31: Equivalent stress distribution in Gripper C

The magnetic flux simulation indicates a strong magnetic field generation, with a maximum flux density of 878.900 mT which is similar to gripper A but slightly lower than gripper B. The field lines are denser and show clear interaction with gripper structure.

Smaller dimensions, increased flexibility, and higher stress/strain distribution than the previous designs demonstrate that this design might be well-suited for handling fragile and irregular objects. The concentrations

of magnetite in this gripper is higher than gripper B but surprisingly it shows lower magnetic field but overall is a better design than gripper B.

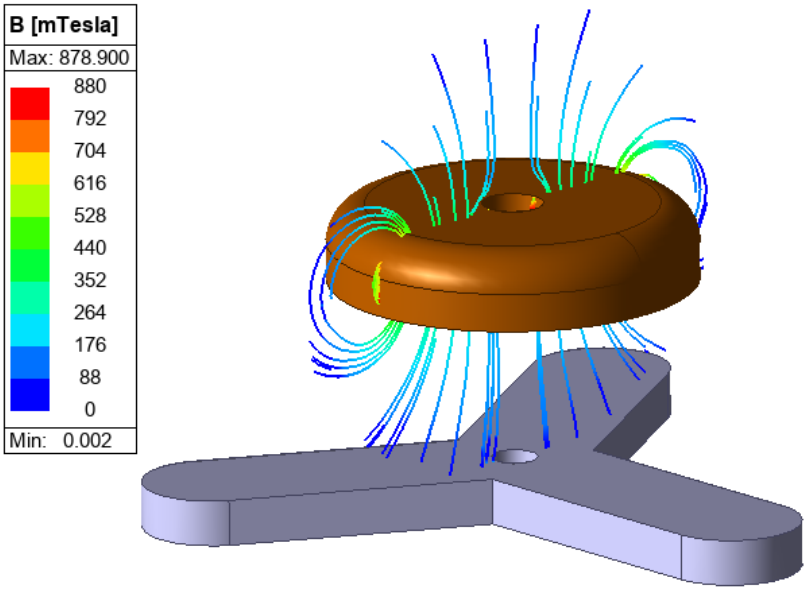

Figure 32: Magnetic flux distribution in Gripper C

Soft Robotic Gripper D

The simulation shows a maximum deformation of 0.00015649 m from actual state occurring at the tips of the gripper fingers with a gradient from maximum (red) at the tips to minimum (blue) at center. The deformation is significantly higher than the previous three grippers. The deformation pattern is uniform throughout the structure similar to gripper C ensuring a more flexible and potentially more adaptive structure.

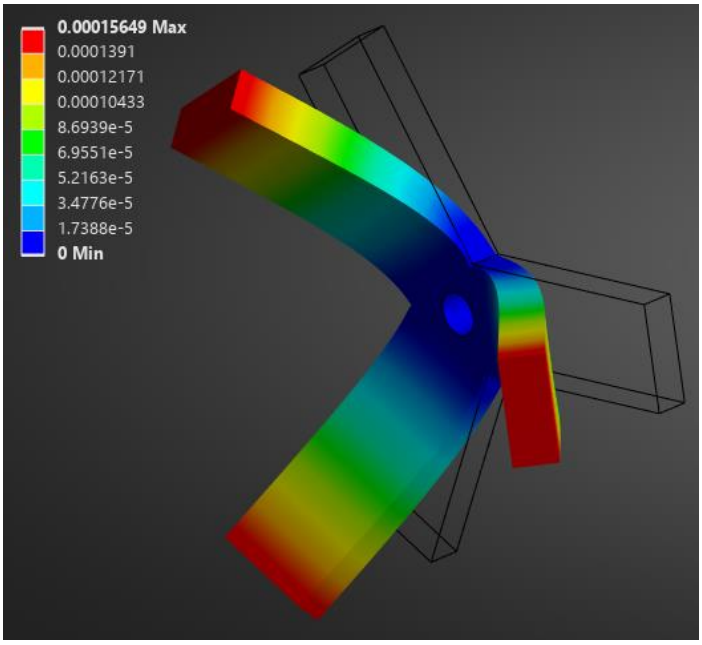

Figure 33: Total deformation in Gripper D

The equivalent elastic strain distribution disclose a maximum strain of 0.0026185 at the central hub of the gripper significantly higher than previous designs. Simialr to gripper C, this distribuiton reveals that the material is being utilized more efficiently through out the structure, leading to better responsive actuation.

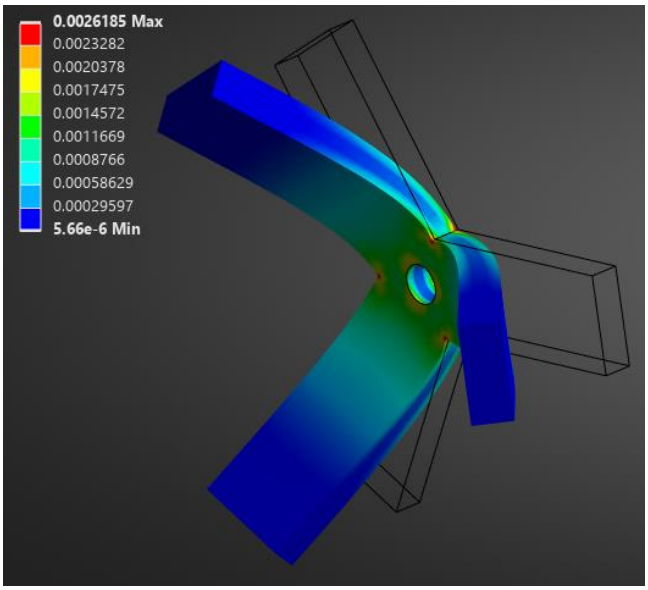

Figure 34: Equivalent elastic strain distribution in Gripper D

The stress analysis reveals a maximum equivalent stress of 3.045e8 Pa, substantially higher than gripper A, B, and C. The stress distribution suggest that the structure is transmitting forces successfully to create the desired bending motion. The higher stress levels also indicates that the gripper is competent of exerting stronger gripping force. The stress levels corelates with gripper C.

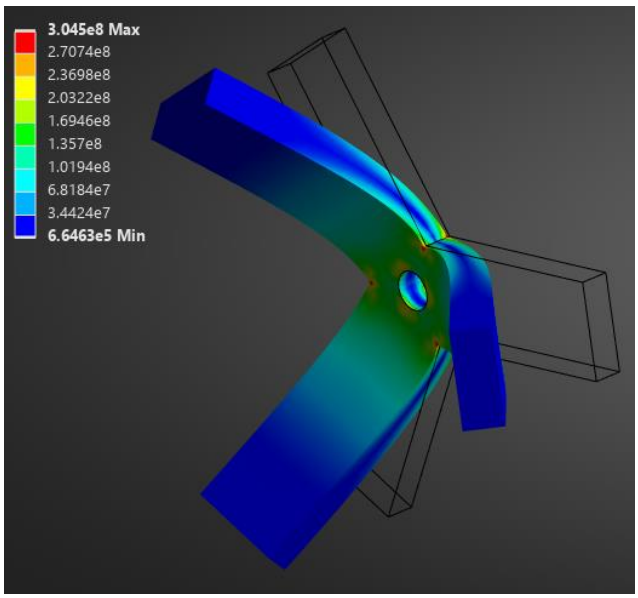

Figure 35: Equivalent stress distribution in Gripper D

The magnetic flux simulation indicates a good magnetic field generation, with a maximum flux density of 757.538 mT. Although it is lower than the previous designs, it still exhibits powerful magnetic interaction as the field lines are highly dense among all designs and indicate strong and precise control of the gripper.

Gripper D is the smallest among all the designs, but it showcased high deformation and stress/strain values making it the most versatile design.

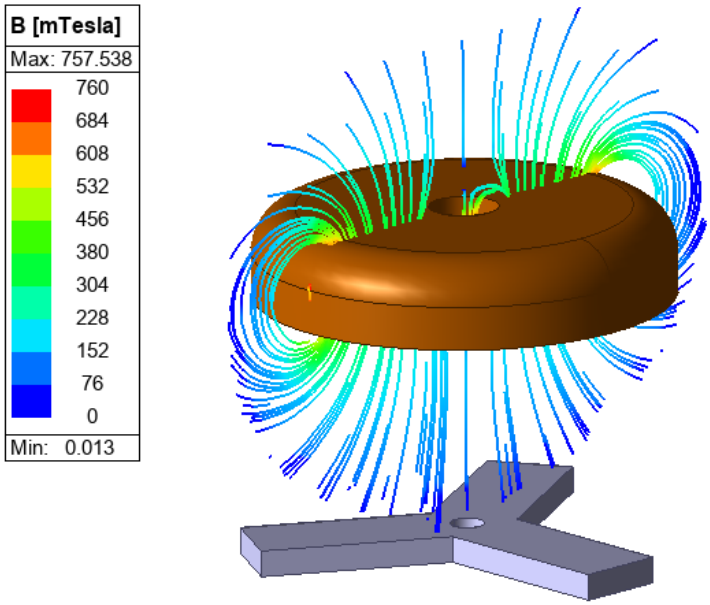

Figure 36: Magnetic flux distribution in Gripper D

The low parameters of deformation and stress/strain values observed in the simulation represent the very beginning of the actuation process. It indicates the threshold point where the grippers transition from its resting phase to an activated phase.

While each design has its plus points, Soft Robotic Gripper D appears to be the best overall choice for the desired outcomes. Size similar to the size of the permanent magnet, high deformation and stress/strain levels specify this conclusion even though the magnetic flux is the lowest but its interaction with the permanent magnet is best among all the designs.

Gripper's Functionality Test

The functionality test provided valuable insights about the performance of the soft robotic gripper D. The gripper was actuated when brought closer to the permanent magnet, precisely at around 5 cm and by 3 cm to the magnet, the gripper fully bent its all three fingers. It was able to grasp and pick 5 to 10 gm of objects. The gripper got the maximum deformation near the center of the magnet and as it moved away from the center; magnetic effect decreased. Hence overall, grasping of the object was good but picking height of the object was very minimal (just around 1cm).

Figure 37: Grasping and Picking tests on various objects

Discussion

This chapter provides an opportunity to delve into the challenges came across during the project and to analyze various aspects of the magnetically actuated soft robotic gripper's performance.

One of the main difficulties faced during the project was selecting appropriate components within the allowed budget by the university, as all the components used in the project were bought newly. With a constraint budget, mid level components were selected that would just do the required task. To make the soft robotic gripper work more effectively, the permanent magnet needs to be bigger in size and posses higher pull force so that a bigger size gripper could be utilized which would give better results like picking height of the objects. A bigger magnet would have both poles equally potent unlike the one utilized which has just one pole effective. Similarly, better magnetic particles option Strontium ferrite could have been used for better results, but it was very costly to buy.

Another noteworthy challenge was to fabricate the gripper with an appropriate size, shape, and magnetic particle concentration. Multiple tries were made to finally found a relevant design that would somewhat make the necessary outcomes. Initial plan included to use a DC motor to rotate the permanent magnet and also to incorporate a force sensor that would measure the gripping force but because the best gripper design was too small, these wouldn't be applicable.

Despite these challenges, the project yielded influential understanding and achievements. The project was successful in fabricating a soft robotic gripper that can be actuated by magnetic field. Future research would enable to enhance the working and application of magnetically actuated soft robotic gripper.

Conclusion

Summary

Through this project, a magnetically actuated soft robotic gripper has been designed, fabricated, and evaluated that will be useful in several manufacturing industry applications. The project incorporates advanced engineering concepts, materials, and technologies to develop soft robotic manipulation. Comprehensive FEA and FEM simulations were commenced to develop and test multiple gripper designs for there structural integrity, while practical tests assured gripper's functionality. Overall, this project expresses the achievement of a functional and innovative soft robotic gripper that has potential to bring revolution in numerous sectors including medical, industrial, marine, space, and agricultural realms.

Evaluation and Project management

This project has prosperously attained its objectives by designing and fabricating a functional soft robotic gripper. The magnetic actuation mechanism enabled the gripper's manipulation. Thorough testing and evaluation have supported the gripper's functionality, underlining its potential in several future applications.

The project followed a well organised planning and management process, Gantt chart was made to assign time for various tasks throughout the course of the project. The Gantt chart is provided in Appendix A. Regular inspections and reviews were conducted to make sure the project is on track.

The fabrication of the gripper highlights the project's innovative thinking and exploration of advanced manufacturing techniques. The use of soft material and composition of soft material and magnetic particles opened path for future research in magnetically actuation and soft robotics.

In conclusion, the project's achievements are evidence of effective time management, planning, and execution in completion of each phase of the project.

Project impact / Creativity and innovation

This project demonstrates noteworthy creativity and invention in the field of soft robotics, specifically in the evolution of magnetically actuated grippers. The successful implementation of magnetic actuation system for soft robotic grippers offers a unique alternative to conventional pneumatic or cable driven systems. The creation of the composite material by blending Ecoflex 00-50 and magnetite particles represents an innovative approach to prospering magneto-responsive soft materials. The project merged concepts from material science, robotics, additive manufacturing, and magnetism emphasizing the interdisciplinary approach of modern robotics research. Moreover, the usage of low-cost materials highlights its economic feasibility. The blending of innovation, energy efficiency, non risky human interaction, affordability, and environmentally friendly makes this gripper forerunner of the future of soft robotics.

Future Work

The successful completion of the magnetically actuated soft robotic gripper opens the door to several future research and development. Firstly, enhancing the magnetic actuation by exploring stronger permanent magnets or electromagnets. Investigating multi-pole magnetic systems for more complex and accurate gripper movements. Inspecting materials with superior mechanical properties such as hydrogels, shape-memory alloys to improve durability and responsiveness.

Secondly, investigating advanced fabrication techniques like 4D printing through which the grippers can change its shape over time or in response to environmental stimuli. Developing methods for precise alignment of magnetic particle during the curing process to increase the magnetic response.

Lastly, integration of flexible sensors for force feedback within the gripper structure can provide real-time gripping force insights. Adding sensors to measure parameters like force, position, and temperature in real-time can be very helpful for precise working of the gripper. Also, developing closed-loop control systems which adjusts the gripper according to the feedback received from the sensors can enhance the potential of magneto-responsive soft robotic gripper.

In conclusion, the magnetically actuated soft robotic gripper project leads for future advancements in soft robotics. By exploring advanced materials, fabrication techniques, and incorporation of feedback system can steer even more revolutionary and versatile gripper solutions.

References

(B. Mueller, ". m. t. p. t. d. d. m. A. A. v. 3. n. 2. 2., n.d. In: s.l.:s.n.

(Callister, W. D. &. R. D. G. (. M. s. a. e. a. i. (. e. W., n.d. In: s.l.:s.n.

(Choy, T. C. (. E. M. T. P. a. A. (. e. O. U. P., n.d. In: s.l.:s.n.

(F. Baumann, H. B. J. G. F. K. a. D. R. ". o. s. t. o. q. o. 3. p. p. C.-A. D. a. A. v. 1. n. 1. p. 1.-3. 2., n.d. In: s.l.:s.n.

(Ramanujan, R. V. &. L. L. L. (. ". m. b. o. s. m. c. S. M. a. S. 1. 9., n.d. In: s.l.:s.n.

AboZaid, Y. A., Aboelrayat, M. T., Fahim, I. S. & Radwan, A. G., 2024. Soft robotic grippers: A review on technologies, materials, and applications.

Anon., 2020. Soft Actuators for Soft Robotic Applications: A Review. *Nazek El-Atab, Rishabh B. Mishra, Fhad Al-Modaf, Lana Joharji.*

Anon., n.d. [Online]
Available at: https://www.hackster.io/news/researchers-develop-a-soft-robotic-finger-with-self-perception-1b7cb2ee5c53

Anon., n.d. [Online]
Available at: Optimal and Cost-Effective Machine Design Using FEM Magnetic Simulation (cadence.com)).

Anon., n.d. [Online]
Available at: (https://www.sharrettsplating.com/blog/materials-used-3d-printing/#:~:text=3D%20printing%20materials%20can%20vary,components%20to%20customized%20consumer%20goods

Anon., n.d. [Online]
Available at: (https://www.xometry.com/resources/3d-printing/abs-3d-printing-filament/#:~:text=ABS%20(acrylonitrile%20butadiene%20styrene)%20is,the%20face%20of%20temperature%20swings

Anon., n.d. [Online]
Available at: (https://www.simplify3d.com/resources/materials-guide/pva/

Anon., n.d. [Online]
Available at: (https://www.xometry.com/resources/3d-printing/polycarbonate-3d-printing/)

Anon., n.d. [Online]
Available at: (The mechanical behavior of polylactic acid (PLA) films: fabrication, experiments and modelling).

Anon., n.d. [Online]
Available at: E1105/NEO/BLK | Eclipse Neodymium Magnet 75kg, Width 48mm | RS (rs-online.com)

Anon., n.d. [Online]
Available at: Magnetite powder - Type: Natural (Mined Source) - Weight: 500g - By Inoxia : Amazon.co.uk: Everything Else

Anon., n.d. [Online]
Available at: (ARE-250 CE | The global standard for mixing, defoaming, dispersing, and pulverizing THINKY CORPORATION (thinkymixer.com))

E. Diller, J. G. G. Z. L. Z. Y. M. S., 2014. *Robotics: Science and Systems.*

F. Baumann, H. B. J. G. F. K. a. D. R., n.d. "Influence of slicing tools on quality of 3D printed parts,". *Computer-Aided Design and Applications,* Volume 13.

Ganguly, S. & Margel, S., 2023. Fabrication and Applications of Magnetic Polymer Composites for Soft Robotics.

Julia A. Carpenter, T. B. E. S. S. A. R., 2021. Facile Manufacturing Route for Magneto-Responsive Soft Actuators.

Jun Shintake, V. C. D. F. a. H. S., 2018. Soft Robotic Grippers.

Koivikko, A., Drotlef, D.-M. & Sitti, M., 2020. Magnetically switchable soft suction grippers.

Marchese, A. D., Tedrake, R. & Rus, D., 2016. Dynamics and trajectory optimization for a soft spatial fluidic elastomer manipulator. *The International Journal of Robotics Research,* Volume 35(8).

Rus, D. & Tolley, M. T., 2015. Design, fabrication and control of soft robots. Volume 521.

S. Bhavikatti, 2005. Finite element analysis. New Age International.

Wang, H. et al., 2022. Magnetic soft robots: Design, actuation, and function.

Zhou, J., Chen, S. & Wang, Z., 2017. A Soft-Robotic Gripper With Enhanced Object Adaptation and Grasping Reliability. *IEEE ROBOTICS AND AUTOMATION LETTERS,* Volume 2.

Appendix A: Project Gantt Chart

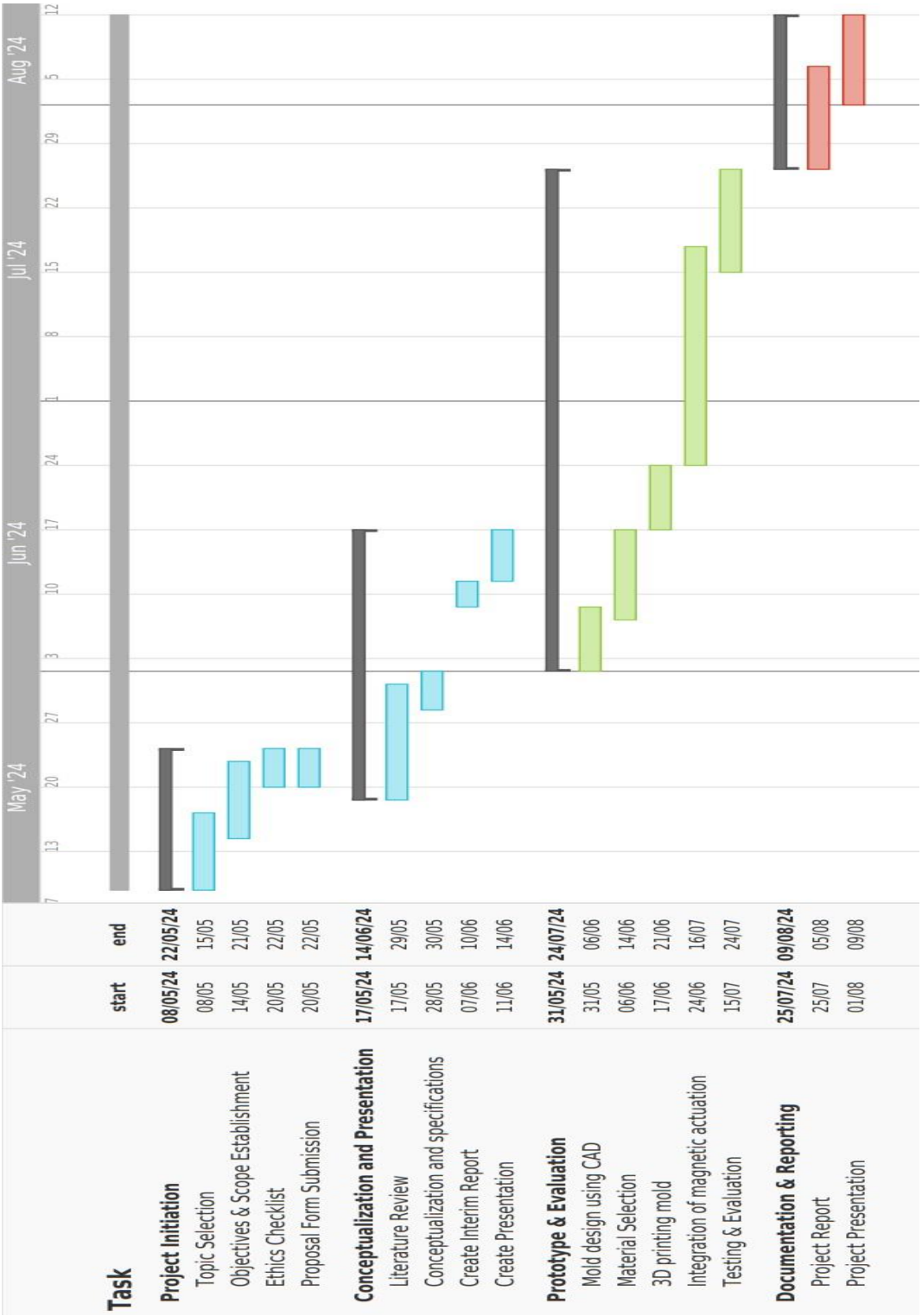

Figure 38: Project Gantt Chart