CHAPTER 1
INTRODUCTION

1.1 OVERVIEW

Solar energy is popular due to its renewable nature, widespread availability, and decreasing costs, making it a sustainable, accessible, and cost-effective source of power with minimal environmental impact. Solar power is becoming increasingly popular as a source of renewable energy due to its numerous benefits such as cost-effectiveness, reliability, and sustainability. The use of solar energy for agricultural purposes has been gaining attention as it provides farmers with a reliable and sustainable source of energy for irrigation, crop drying, and other activities. However, the efficiency and effectiveness of solar panels in agriculture can be improved by employing a single-axis sun-tracking mechanism. In this project, we aim to design and manufacture a passive solar tracking system with single axis tracking, in this there is no use of any kind of electrical power required for the rotation for solar panel instead of electrical use we using mechanical source of power. In the spiral spring mechanical energy is stored and with the help of gear arrangement speed will reduce such a way that that can match the sun speed throughout the day. The main goal of this project to design tracking system for the domestic and industrial purpose solar plate for increase the efficacy of panel.

1.2 Solar Energy

Solar energy is a renewable and sustainable energy source that is becoming increasingly popular in the world due to its many benefits. Solar energy is produced by the sun, which emits light and heat energy through a process called nuclear fusion. This energy is then captured and converted into usable electricity by solar panels.

One of the main advantages of solar energy is that it is a clean and renewable energy source. Unlike fossil fuels, solar energy does not produce harmful emissions that can damage the environment and contribute to climate change. Solar panels also do not require any fuel to generate electricity, which means that they have zero fuel costs and produce no waste or pollution. Another advantage of solar energy is that it is a decentralized energy source. This means that solar panels can be installed on rooftops, in remote areas.

1.2.1 Solar Radiation

Solar radiation, also known as solar energy or sunlight, is the electromagnetic radiation emitted by the Sun. It is the primary source of energy for our planet and plays a crucial role in various natural processes and human activities.

There are two main types of solar radiation relevant to solar panels:

- **Direct radiation**: Sunlight that reaches the Earth without scattering.
- **Diffuse radiation**: Sunlight scattered by molecules and particles in the atmosphere.

1.2.2 About The Sun

The Sun has an approximate diameter of about 1.39 million kilometres (864,000 miles. The temperature on the Sun's surface, known as the photosphere, is around 5,500 degrees Celsius (9,932

degrees Fahrenheit). The core of the Sun is incredibly hot, with temperatures reaching around 15 million degrees Celsius. This is where nuclear fusion occurs, converting hydrogen into helium and releasing tremendous amounts of energy. Luminosity: The Sun's luminosity is a measure of the total amount of energy it emits per unit of time. It is approximately 3.8 x 10^26 watts, which is equivalent to the energy output of about 3.8 trillion billion 100-watt light bulbs.

Distance from Earth: The average distance between the Sun and the Earth, known as an astronomical unit (AU), is approximately 149.6 million kilometres (93 million miles). This distance is used as a standard to measure distances within the solar system. The solar irradiance represents the power per unit area of sunlight reaching the Earth's outer atmosphere, is approximately 1361 watts per square meter (W/m^2).

1.3 Photovoltaic System

A photovoltaic (PV) cell, also known as a solar cell, is a device that converts sunlight directly into electricity through the photovoltaic effect. PV cells are the building blocks of solar panels and play a crucial role in solar power generation. A PV cell typically consists of several layers of different semiconductor materials, most commonly silicon. The main components of a typical silicon-based PV cell are:

- Absorber Layer: This layer is usually made of silicon and is responsible for absorbing sunlight. Silicon is a semiconductor material that can generate electricity when exposed to light.
- P-N Junction: The absorber layer is doped with impurities to create a p-n junction, which is the boundary between the positively charged (p-type) and negatively charged (n-type) regions. This junction allows for the separation and flow of electrons and holes, enabling the generation of an electric current.

Types of Photovoltaic (PV) Cells

There are several types of photovoltaic (PV) cells, each using different materials and technologies to convert sunlight into electricity. The major types are explained below:

1.3.1 Crystalline Silicon (c-Si) Cells

These cells are made from slices of crystalline silicon, which can be either monocrystalline or polycrystalline. Monocrystalline cells are made from a single crystal structure, offering high efficiency and a uniform black appearance. crystalline silicon cells are widely used and known for their long-term reliability.

1.3.2 Thin-Film Solar Cells

Thin-film cells utilize a thin semiconductor layer, which is typically deposited on a substrate material such as glass or metal. The most common thin-film materials include amorphous silicon (a-Si), copper indium gallium selenide (CIGS). Thin-film cells are less expensive to produce compared to crystalline silicon cells and can be flexible, allowing for more versatile applications.

1.3.3 Multijunction Solar Cells

Multijunction cells consist of multiple semiconductor layers, each tuned to absorb different portions of the solar spectrum. By stacking different materials with varying band gaps, multijunction cells achieve

higher efficiency than single-junction cells. They are often used in concentrated photovoltaic (CPV) systems and space applications where efficiency is crucial.

1.3.4 Organic Photovoltaic (OPV) Cells

Organic photovoltaic (OPV) cells utilize organic materials, such as polymers or small molecules, as the active layer. These cells have the potential for low-cost production and can be flexible**.**

1.3.5 Dye-Sensitized Solar Cells (DSSCs)

Dye-sensitized solar cells (DSSCs) use a layer of photosensitive dye to capture sunlight. The dye absorbs photons and transfers the energy to a semiconductor material, generating an electric current. DSSCs have lower production costs and perform well under low-light conditions, but their efficiency is typically lower compared to other PV cell types.

1.3.6 Perovskite Solar Cells

An emerging technology that uses perovskite-structured materials as light absorbers. Characteristics:

- Rapidly improving efficiency (above 25% in labs)
- Potential for cheap manufacturing
- Stability and large-scale production are still under research

1.4 Solar Tracking

A solar tracking system is a mechanism or device used to orient solar panels or mirrors toward the Sun to maximize the absorption of solar radiation. The primary goal of a solar tracking system is to optimize the incident angle of sunlight on the solar panels, ensuring that they receive the highest possible solar irradiance throughout the day. This increased efficiency can significantly enhance the energy output of solar power systems. There are primarily two types of solar tracking systems: single-axis and dual-axis.

Single-Axis Tracking System: A single-axis tracking system adjusts the position of solar panels along one axis, typically either the horizontal (azimuth) or vertical (elevation) axis. Horizontal single-axis tracking systems rotate the solar panels from east to west, following the Sun's path throughout the day. This allows the panels to face the Sun directly as it moves across the sky. Vertical single-axis tracking systems tilt the panels to optimize the angle of incidence as the Sun's elevation changes throughout the day. Single-axis tracking systems are relatively simpler and more cost- effective than dual-axis systems.

Dual-Axis Tracking System: A dual-axis tracking system adjusts the position of solar panels along both the horizontal and vertical axes. These systems allow the solar panels to track the Sun's movement both horizontally and vertically, ensuring that they are always perpendicular to the incoming sunlight. Dual-axis tracking systems offer the highest level of accuracy and efficiency, as they can follow the Sun's position more precisely throughout the day. However, they are more complex and expensive compared to single-axis systems.

CHAPTER 2
SYSTEM DESIGN

2.1 Block Diagram

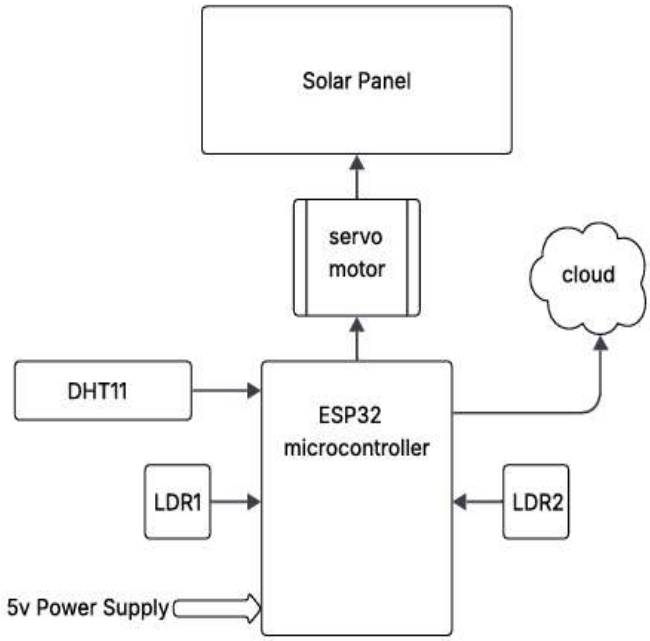

2.2 Circuit Diagram

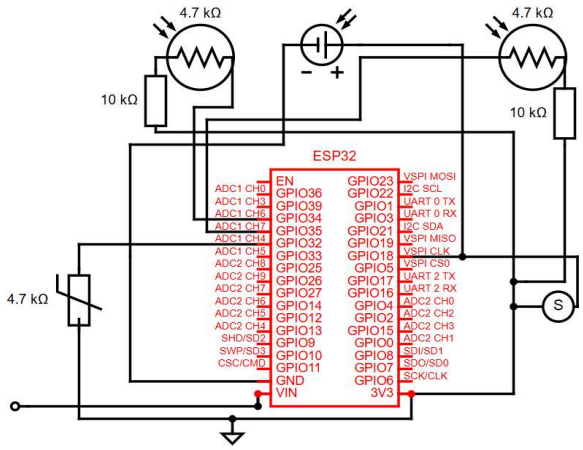

\

CHAPTER 3
COMPONENTS USED AND THEIR DETAILS

3.1 Components Used

Component	Type	Purpose	Key Specifications
ESP32	Microcontroller	Main controller for all sensors, modules, and servo motor	Dual-core, 240 MHz, Wi-Fi + Bluetooth, 3.3V logic
MG90S Servo Motor	Actuator	Rotates solar panel based on light input from LDRs	4.8–6V, ~2.2 kg/cm torque, PWM control, ~13.5g
DHT11 Sensor	Temperature & Humidity Sensor	Measures environmental temperature and humidity	Temp range: 0–50°C, Humidity: 20–90% RH, Digital output
LDR(Light Dependent Resistor) Modules	Light Sensor	Detects light intensity to determine sun direction	Analog output, resistive sensor, varies with light intensity
Solar Panel	Energy Harvesting Device	Converts solar energy into electrical power	Voltage: 6V or 12V (typical), Current: 100–500mA+

3.2 Components Details

3.2.1 ESP32

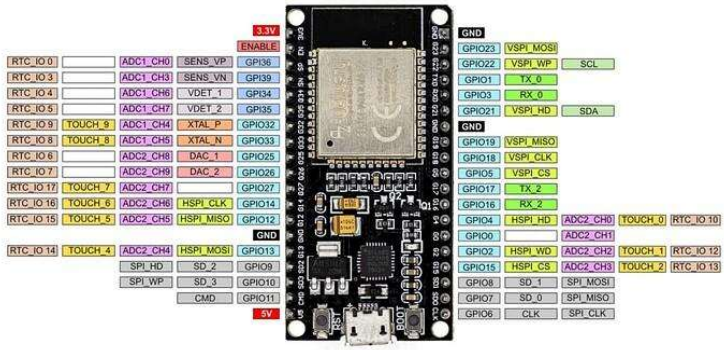

ESP32 is a chip that provides Wi-Fi and (in some models) Bluetooth connectivity for embedded devices.

Detailed look at the ESP32 specifications:

Processor:

- Architecture: Tensilica Xtensa 32-bit LX6.
- Clock Frequency: Up to 240 MHz.
- Core: Typically dual-core, with some models using single-core.

Memory:

- SRAM: 520 KB (320 KB DRAM, 200 KB IRAM).
- Flash Memory: 4 MB (default), up to 16 MB available.
- PSRAM: Up to 8 MB external PSRAM supported.

Wireless Connectivity:

- Wi-Fi: 802.11 b/g/n (2.4 GHz).
- Bluetooth: 4.2 (BLE & Classic).

Power:

- Operating Voltage: 3.3V.
- Low Power Consumption: Enables operation in low-power modes, including deep sleep.

Peripherals:

- GPIOs: 34 programmable GPIOs.
- ADC: 12-bit SAR ADC with up to 18 channels.
- DAC: Two 8-bit DACs.
- Touch Sensors: 10 touch sensors.
- Communication Interfaces: SPI, I2S, I2C, UART, CAN 2.0, Ethernet.
- Other: Pulse count controller, RMT, TWAI (CAN).

Other Features:

- JTAG: JTAG interface for debugging and programming.
- ROM: 448 KB.
- Clock and Timer: Internal and external oscillators, multiple timer groups.

ESP32 Variants:

- ESP32-WROOM-32: A popular module with integrated Wi-Fi and Bluetooth.
- ESP32-S3: A more advanced variant with features like 5GHz Wi-Fi and higher-performance peripherals.
- ESP32-C2: A low-cost variant with a single-core processor and lower memory capacity

3.2.2 Servo Motor MG90s

The MG90S micro servo with metal gears is small and lightweight with relatively high power for its size. The servo can rotate 150 degrees and works the same as standard servos. You can use standard servo code, hardware or libraries to control this servo.

The servo comes with 3 servo arms and screws

Specifications

• Weight: 13.4 g

• Dimension: 22.5 x 12 x 35.5

• Stall torque: 1.8 kgf·cm (4.8V)

• Operating speed: 0.1 s/60 degree

• Operating voltage: 4.8 V -

• Dead band width: 5 µs

3.2.3 DHT11 Sensor

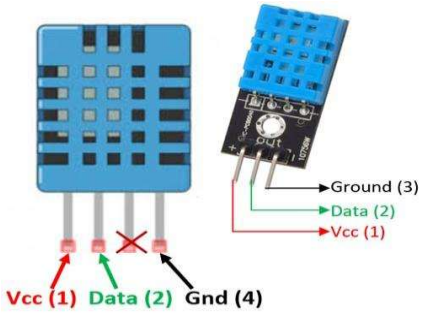

The DHT11 is a commonly used Temperature and humidity sensor that comes with a dedicated NTC to measure temperature and an 8-bit microcontroller to output the values of temperature and humidity as serial data. It is a widely used low-cost digital sensor designed to measure **temperature and relative humidity**. It communicates with microcontrollers such as the **ESP32** via a **single-wire digital interface**, making it simple and efficient to use. The sensor can measure temperatures from **0°C to**

50°C with an accuracy of **±2°C**, and humidity levels from **20% to 90% RH** with an accuracy of **±5% RH**.

It is ideal for **basic environmental monitoring** in systems such as **weather stations, greenhouses, and IoT-based agriculture**. The DHT11 operates on a voltage range of **3.3V to 5.5V**, consumes very low power, and updates readings at a frequency of **1 Hz** (one reading per second). Its **compact size**, ease of interfacing, and compatibility with standard microcontroller platforms make it a popular choice for both beginner and advanced embedded system project.

DHT11 Specifications

- Operating Voltage: 3.5V to 5.5V
- Operating current: 0.3mA (measuring) 60uA (standby)
- Output: Serial data
- Temperature Range: 0°C to 50°C
- Humidity Range: 20% to 90%
- Resolution: Temperature and Humidity both are 16-bit
- Accuracy: ±1°C and ±1%

3.2.4 LDR(Light Dependent Resistor) Module

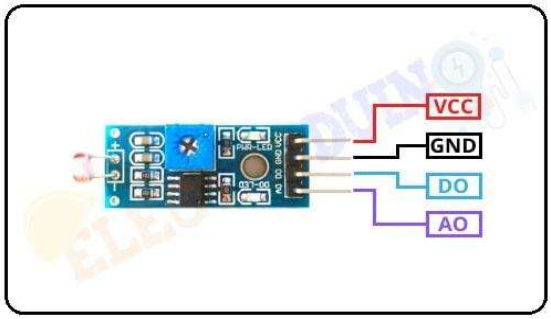

LDR sensor module is used to detect the intensity of light. It is associated with both analog output pin and digital output pin labelled as AO and DO respectively on the board. When there is light , the resistance of LDR will become low according to the intensity of light. The greater the intensity of light, the lower the resistance of LDR. The sensor has a potentiometer knob that can

be adjusted to change the sensitivity of LDR towards light.

Features:

1. Can detect ambient brightness and light intensity

2. Adjustable sensitivity (via blue digital potentiometer adjustment)

3. Output type: Analog and Digital

4. With fixed bolt hole for easy installation

Specification:

- Maximum power dissipation is 200mW

- The maximum voltage at 0 lux is 200V
- The peak wavelength is 600nm
- Minimum resistance at 10lux is 1.8kΩ
- Maximum resistance at 10lux is 4.5kΩ
- Typical resistance at100lux is 0.7kΩ
- Dark resistance after 1 sec is 0.03MΩ
- Dark resistance after 5 sec is 0.25MΩ

How it works:

The LDR sensor module is powered by a 5V supply. A preset knob is used to set a threshold voltage at the **non-inverting input** of the comparator IC, which adjusts the sensor's sensitivity to light.

When **light intensity increases**, the **LDR resistance decreases**, causing a **lower voltage** at the **inverting input** of the IC. Since this voltage is **less than** the threshold, the **output goes LOW**.

When **light intensity decreases** (in darkness), the **LDR resistance increases**, resulting in a **higher voltage** at the inverting input. If this voltage is **greater than** the threshold, the **output goes HIGH**

Pin Configuration:

VCC: 5V Power supply

GND: Ground

DO: Digital Output

AO: Analog Output

3.2.5 Solar Panel

The electricity generated by capturing the sun light is called as solar energy which is used for business and home purpose. The natural nuclear reactor is sun which releases the energy with tiny packets called photons. The atoms lose the electrons when the photons hit the solar cells. A solar panel is made of multiple panels that wired together, more electricity is generated by the more panels. Direct Current is generated by the solar panels. In solar tracking systems, the panel is mounted on a movable platform that adjusts its position according to the sun's direction, maximizing energy output. For small IoT applications, compact and lightweight solar panels with moderate power ratings are preferred due to ease of installation and sufficient performance for low-power devices.

Specifications of Solar Panel Used

- **Type**: Polycrystalline
- **Power Output**: 6W
- **Voltage (V)**: 6V
- **Current (Imp)**: 1A
- **Open Circuit Voltage**: ~7.2V
- **Short Circuit Current**: ~1.2A
- **Dimensions**: Approximately 18 cm × 11 cm
- **Weight**: Around 250 grams
- **Efficiency**: ~17%
- **Output Type**: 2-wire DC output
- **Mounting**: Pre-drilled holes for screws or brackets

CHAPTER 4
WORKING

The solar panel will generate electricity and the current sensor and voltage sensor will measure the current and voltage output of the solar panel. The LDR sensor will detect the position of the sun. The temperature sensor will measure the temperature of the solar panel. The ESP32 will collect all this data and send it to the Blynk app. You can then use the Blynk app to monitor the performance of your solar panel and control the servo motor to track the sun.

Here is a more detailed explanation of how each component works:

The solar panel converts sunlight into electricity. The LDR sensor (light-dependent resistor) is a sensor that changes its resistance based on the amount of light it receives. The temperature sensor measures the temperature of its environment. The ESP32 is a microcontroller that can be used to collect data from sensors, control devices, and Communicate over the internet. The Blynk app is a mobile app that allows you to create dashboards to monitor and control devices connected to the internet. Once you have connected all of the components and uploaded the Blynk app, you can start monitoring your solar panel and controlling the servo motor to track the sun.

Steps involved in assembling a solar panel monitoring and sun tracker using ESP32, servo motor, solar panel, LDR sensor, temperature sensor, and Blynk app:

- Connect the solar panel to the ESP32 using a **voltage regulator** to reduce the panel voltage to a safe 3.3V suitable for the ESP32.
- Connect the **LDR sensor** to the ESP32 to enable detection of sunlight intensity and direction.
- Connect the **temperature sensor** to the ESP32 to monitor the thermal condition of the solar panel.
- Connect the **servo motor** to the ESP32 to control the panel's movement based on sunlight direction.
- Integrate the ESP32 with the **Blynk IoT app** for remote monitoring of sensor data and control of the servo motor.
- Use a **breadboard and jumper wires** to prototype the circuit before final assembly and soldering.
- A **voltage regulator** must be included to protect the ESP32 from overvoltage supplied by the solar panel.
- Include a **current sensor** rated to handle the solar panel's maximum output current.
- Ensure the **servo motor** has sufficient torque to move and hold the solar panel in place.
- Use a **temperature sensor** capable of withstanding high surface temperatures of the panel.
- Mount the solar panel in a **location with direct sunlight** exposure throughout the day.
- Mount the **LDR sensor** in a position with a clear view of the sky for accurate sun tracking.
- Install the **servo motor** securely to ensure smooth and precise movement of the solar panel.
- Enclose the entire circuit in a **weather-resistant casing** to protect it from environmental damage.

CHAPTER 5
GRAPHICAL OUTPUT AND RESULT

5.1 Graphical Output

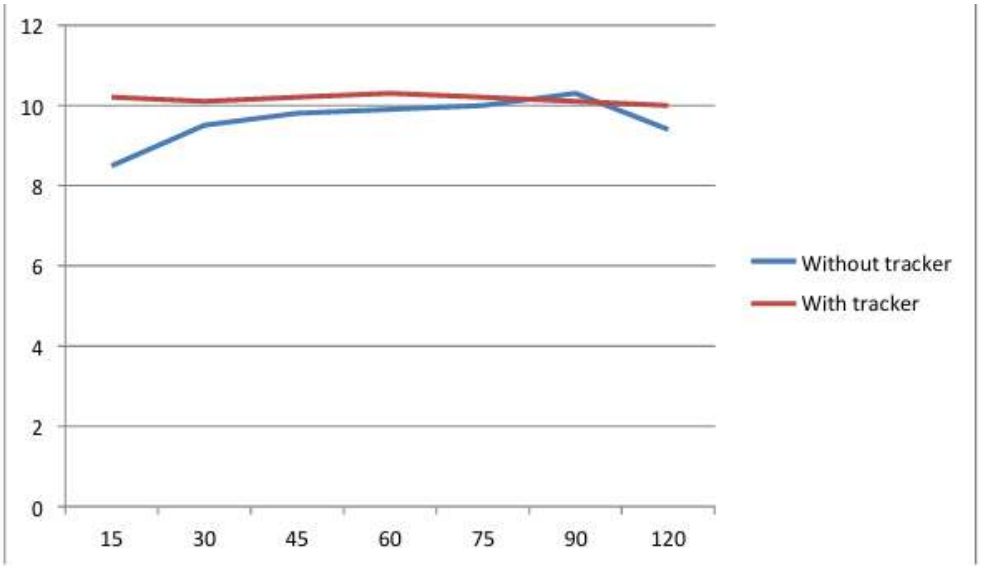

(fig a: Tracking and without tracking output with Voltage on Y-axis)

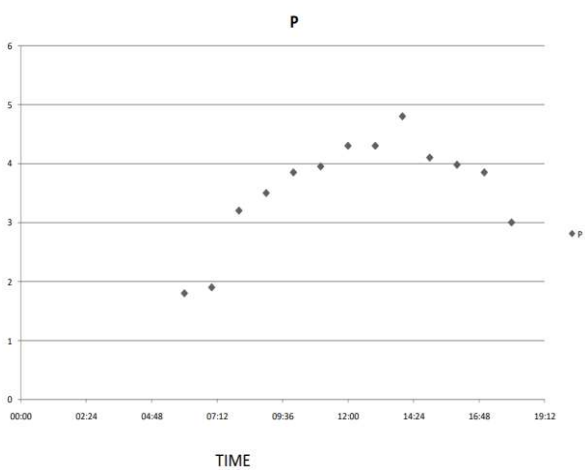

(fig b: Power vs time graph in standard position.)

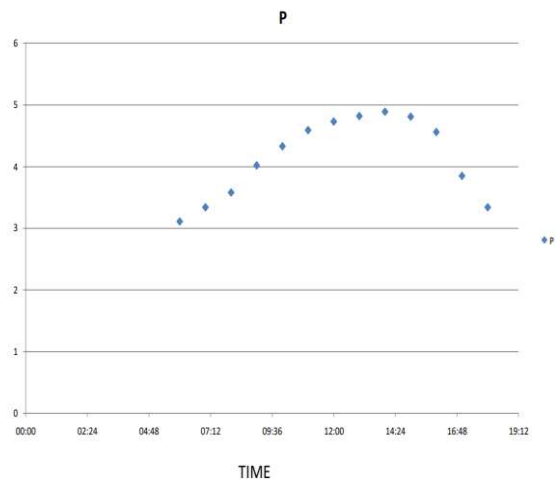

(fig: c Power vs time graph in solar tracking s/s)

5.2 Result

The system has been designed and successfully tested. The values of current, voltage, power and temperature were monitored through the LCD display and the Blynk mobile application. The solar panel turns on the side of higher solar radiation using motor. The system keeps continues track of solar panel, the daily weekly and monthly analysis becomes easy and efficient also with the help of this analysis it is possible to detect any fault occurred within power plant as the generated power may show

some inconsistency in data of Solar power plant. The system helps the power plant to achieve better efficiency using solar tracking.

References:

1. Wikipedia contributors. (n.d.). Solar tracker. Wikipedia. Retrieved [May 20, 2025], from https://en.wikipedia.org/wiki/Solar_tracker
2. **Sankpal, A. Ghumare, P., Bhavle, A., & Sakhare, R.** (2024). *IoT Based Solar Tracking and Monitoring System.* https://www.erpublications.com/uploaded_files/download/prof-a-sankpal-miss-g-priyanka-miss-b-asha-miss-s-rutuja_fcWvv.pdf