DEPARTMENT OF ELECTRICAL ENGINEERING

Lecture Notes on Renewable Energy Sources

Syllabus

NON-CONVENTIONAL ENERGY SOURCES (3-1-0)

MODULE-I (10 HOURS)

Energy Scenario: Classification of Energy Sources, Energy resources (Conventional and nonconventional), Energy needs of India, and energy consumption patterns. Worldwide Potentials of these sources. Energy efficiency and energy security. Energy and its environmental impacts, Distributed generation.

Solar Energy: Solar thermal Systems: Types of collectors, Collection systems, efficiency calculations, applications.

Photo voltaic (PV) technology: Present status, solar cells, cell technologies, characteristics of PV systems, equivalent circuit, array design , building integrated PV system, its components , sizing and economics. Peak power operation. Standalone and grid interactive systems.

MODULE-II (10 HOURS)

Wind Energy: Wind speed and power relation, power extracted from wind, wind distribution and wind speed predictions. Wind power systems: system components, Types of Turbine, Turbine rating. Choice of generators, turbine rating, electrical load matching, Variable speed operation, maximum power operation, control systems, system design features, stand alone and grid connected operation. Small Hydro Systems

MODULE-III (10 HOURS)

Energy storage and hybrid system configurations: Energy storage, Battery – types, equivalent circuit, performance characteristics, battery design, charging and charge regulators. Battery management. Flywheel-energy relations, components, benefits over battery. Fuel Cell energy storage systems. Ultra Capacitors. Bio-Mass and Bio-Fuels.

MODULE-IV (10 HOURS)

Grid Integration: Stand alone systems, Concept of Micro-Grid and its components, Hybrid systems – hybrid with diesel, with fuel cell, solar-wind, wind –hydro systems, mode controller, load sharing, system sizing. Hybrid system economics, Interface requirements, Stable operation, Transient-safety, Operating limits of voltage, frequency, stability margin, energy storage, and load scheduling. Effect on power quality, harmonic distortion, voltage transients and sags, voltage flickers, dynamic reactive power support. Systems stiffness.

ENERGY SCENARIO

INTRODUCTION

Any physical activity in this world, whether carried out by human beings or by nature, is cause due to flow of energy in one form or the other. The word 'energy' itself is derived from the Greek word 'en-ergon', which means 'in-work' or 'work content'. The work output depends on the energy input.

Energy is one of the major inputs for the economic development of any country. In the case of the developing countries, the energy sector assumes a critical importance in view of the ever-increasing energy needs requiring huge investments to meet them.

Energy can be classified into several types based on the following criteria:

- Primary and Secondary energy
- Commercial and Non commercial energy
- Renewable and Non-Renewable energy
- Conventional and Non-conventional energy

1.1 Primary and Secondary Energy

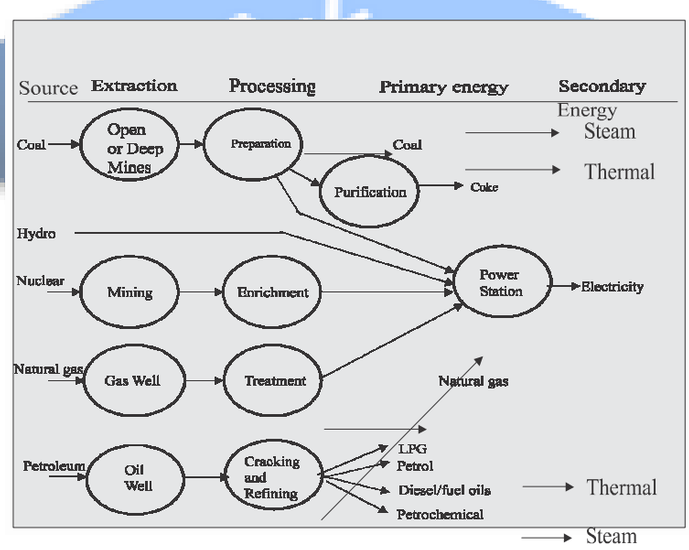

Fig1.1. Major Primary and Secondary sources

Primary energy sources are those that are either found or stored in nature. Common primary energy sources are coal, oil, natural gas, and biomass (such as wood). Other primary energy

sources available include nuclear energy from radioactive substances, thermal energy stored in earth's interior, and potential energy due to earth's gravity. The major primary and secondary energy sources are shown in Figure 1.1

Primary energy sources are costly converted in industrial utilities into secondary energy sources;

for example coal, oil or gas converted into steam and electricity. Primary energy can also be used directly. Some energy sources have non energy uses, for example coal or natural gas can be used as a feedstock in fertilizer plants.

1.2 Commercial Energy and Non Commercial Energy

Commercial Energy

The energy sources that are available in the market for a definite price are known as commercial energy. By far the most important forms of commercial energy are electricity, coal and refined petroleum products. Commercial energy forms the basis of industrial, agricultural, transport and commercial development in the modern world. In the industrialized countries, commercialized fuels are predominant source not only for economic production, but also for many household tasks of general population.

Examples: Electricity, lignite, coal, oil, natural gas etc.

Non-Commercial Energy

The energy sources that are not available in the commercial market for a price are classified as non-commercial energy. Non-commercial energy sources include fuels such as firewood, cattle dung and agricultural wastes, which are traditionally gathered, and not bought at a price used especially in rural households. These are also called traditional fuels. Non-commercial energy is often ignored in energy accounting.

Example: Firewood, agro waste in rural areas; solar energy for water heating, electricity generation, for drying grain, fish and fruits; animal power for transport, threshing, lifting water for irrigation, crushing sugarcane; wind energy for lifting water and electricity generation.

1.3 Renewable and Non-Renewable Energy

Renewable energy is energy obtained from sources that are essentially inexhaustible. Examples of renewable resources include wind power, solar power, geothermal energy, tidal power and hydroelectric power (See Figure 1.2). The most important feature of renewable energy is that it can be harnessed without the release of harmful pollutants.

Non-renewable energy is the conventional fossil fuels such as coal, oil and gas, which are likely to deplete with time.

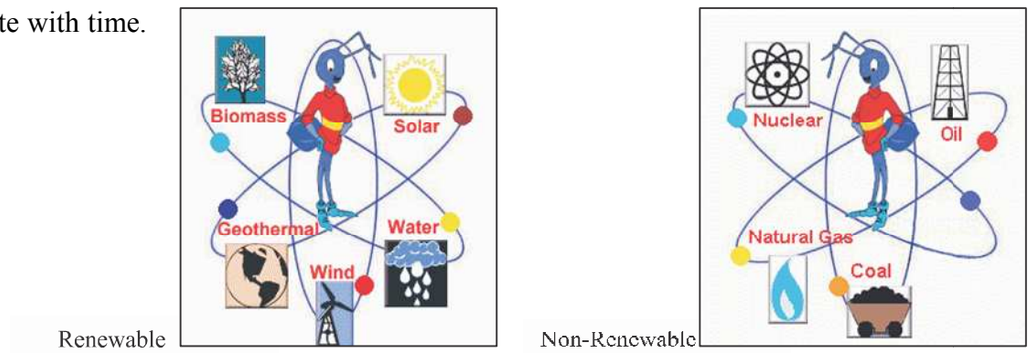

Renewable Non-Renewable

Figure 1.2 Renewable and Non-Renewable Energy

1.4 Conventional and Non-conventional energy resources:

Conventional Energy

Conventional energy resources which are being traditionally used for many decades and were in common use around oil crisis of 1973 are called conventional energy resources, e.g., fossil fuel, nuclear and hydro resources.

Non-conventional energy

Non-conventional energy resources which are considered for large – scale use after oil crisis of 1973, are called non-conventional energy sources, e.g., solar, wind, biomass, etc.

Energy Consumption and Standard Of Living:

The energy consumption of a nation can be broadly divided into the following areas or sectors depending on energy-related activities. These can be further subdivided into subsectors:

- Domestic sector (houses and offices including commercial buildings)
- Transportation sector
- Agriculture sector

- Industry sector

Consumption of a large amount of energy in a country indicates increased activities in these sectors. This may imply better comforts at home due to use of various appliances, better transport facilities and more agricultural and industrial production. All of this amount to a better quality of life. Therefore, the per capita energy consumption of a country is an index of the standard of living or prosperity (i.e. income) of the people of the country.

1.5 Global Primary Energy Reserves*

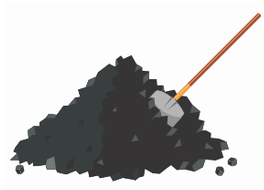

Coal

The proven global coal reserve was estimated to be 9,84,453 million tonnes by end of 2003. The USA had the largest share of the global reserve (25.4%) followed by Russia (15.9%), China (11.6%). India was 4th in the list with 8.6%.

Oil

The global proven oil reserve was estimated to be 1147 billion barrels by the end of 2003. Saudi Arabia had the largest share of the reserve with almost 23%. (One barrel of oil is approximately 160 liters)

Gas

The global proven gas reserve was estimated to be 176 trillion cubic metres by the end of 2003. The Russian Federation had the largest share of the reserve with almost 27%.

(*Source: BP Statistical Review of World Energy, June 2004)

Global Primary Energy Consumption

The global primary energy consumption at the end of 2003 was equivalent to 9741 million tons of oil equivalent (MTones). The Figure 1.3 shows in what proportions the sources mentioned above contributed to this global figure.

Energy distribution between developed and developing Countries

Although 80 percent of the world's population lies in the developing countries (a four- fold population increase in the past 25 years), their energy consumption amounts to only 40 percent of the world total energy consumption. The high standards of living in the developed countries are attributable to high energy consumption levels.

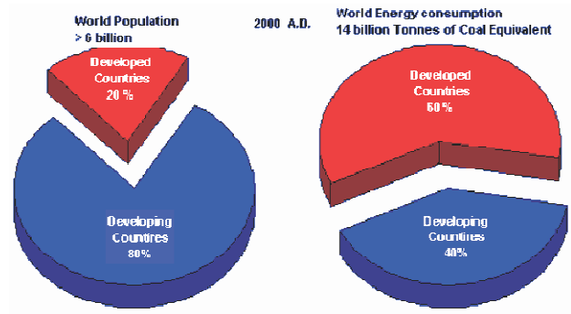

Fig. 1.4: Energy Distribution Between Developed and Developing Countries

Also the rapid population growth in the developing countries has kept the per capita energy consumption low compared with that of highly industrialized developed countries. The world average energy consumption per person is equivalent to 2.2 tones of coal. In industrialized countries, people use four to five times more than the world average and nine times more than the average for the developing countries. An American uses 32 times more commercial energy than an Indian.

1.6 Indian Energy Scenario

Coal dominates the energy mix in India, contributing to 55% of the total primary energy production. Over the years, there has been a marked increase in the share of natural gas in prima- ry energy production from 10% in 1994 to 13% in 1999. There has been a decline in the share of oil in primary energy production from 20% to 17% during the same period.

Energy Supply

Coal Supply

India has huge coal reserves, at least 84,396 million tones of proven recoverable reserves (at the end of 2003). These amounts to almost 8.6% of the world reserves and it may last for about 230 years at the current Reserve to Production (R/P) ratio. In contrast, the world's proven coal reserves are expected to last only for 192 years at the current R/P ratio.

Reserves/Production (R/P) ratio- If the reserves remaining at the end of the year are divided by the production in that year, the result is the length of time that the remaining reserves would last if production were to continue at that level.

India is the fourth largest producer of coal and lignite in the world. Coal production is concentrated in these states (Andhra Pradesh, Uttar Pradesh, Bihar, Madhya Pradesh, Maharashtra, Orissa, Jharkhand, and West Bengal).

Oil Supply

Oil accounts for about 36 % of India's total energy consumption. India today is one of the top ten oil-guzzling nations in the world and will soon overtake Korea as the third largest consumer of oil in Asia after China and Japan. The country's annual crude oil production is peaked at about 32 million tonne as against the current oil consumption by end of 2007 is expected to reach 136 million tonne(MT), of which domestic production will be only 34 MT. India will have to pay an oil bill of roughly $50 billion, assuming a weighted average price of $50 per barrel of crude. In 2003-04, against total export of $64 billion, oil imports accounted for $21 billion. India imports 70% of its crude needs mainly from gulf nations. The majority of India's roughly 5.4 billion barrels in oil reserves are located in the Bombay High, upper Assam, Cambay, Krishna-Godavari. In terms of sector wise petroleum product consumption, transport accounts for 42% followed by domestic and industry with 24% and 24% respectively. India spent more than Rs.1,10,000 crore on oil imports at the end of 2004.

Natural Gas Supply

Natural gas accounts for about 8.9 per cent of energy consumption in the country. The current demand for natural gas is about 96 million cubic metres per day (mcmd) as against availability of 67 mcmd. By 2007, the demand is expected to be around 200 mcmd. Natural gas reserves are estimated at 660 billion cubic meters.

Electrical Energy Supply

The all India installed capacity of electric power generating stations under utilities was 1,12,581 MW as on 31st May 2004, consisting of 28,860 MW- hydro, 77,931 MW- thermal and 2,720 MW- nuclear and 1,869 MW- wind (Ministry of Power).

Nuclear Power Supply

Nuclear Power contributes to about 2.4 per cent of electricity generated in India. India has ten nuclear power reactors at five nuclear power stations producing electricity. More nuclear reactors have also been approved for construction.

Hydro Power Supply

India is endowed with a vast and viable hydro potential for power generation of which only

15% has been harnessed so far. The share of hydropower in the country's total generated units has steadily decreased and it presently stands at 25% as on 31st May 2004. It is assessed that exploitable potential at 60% load factor is 84,000 MW.

Final Energy Consumption

Final energy consumption is the actual energy demand at the user end. This is the difference between primary energy consumption and the losses that takes place in transport, transmission & distribution and refinement. The actual final energy consumption (past and projected) is given in Table1.2.

TABLE 1.2 DEMAND FOR COMMERCIAL ENERGY FOR FINAL CONSUMPTION (BAU SCENARIO)

Source	**Units**	**1994-95**	**2001-02**	**2006-07**	**2011-12**
Electricity	Billion Units	289.36	480.08	712.67	1067.88
Coal	Million Tonnes	76.67	109.01	134.99	173.47
Lignite	Million Tonnes	4.85	11.69	16.02	19.70
Natural Gas	Million Cubic	9880	15730	18291	20853
Oil	Million Tonnes	63.55	99.89	139.95	196.47

Source: Planning Commission *BAU:_Business As Usual*

Sector Wise Energy Consumption in India

The major commercial energy consuming sectors in the country are classified as shown in the Figure 1.5. As seen from the figure, industry remains the biggest consumer of commercial energy and its share in the overall consumption is 49%. (Reference year: 1999/2000)

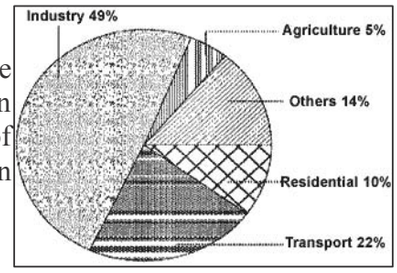

Figure 1.5 Sector Wise Energy Consumption (1999-2000)

1.7 Energy Needs of Growing Economy

Economic growth is desirable for developing countries, and energy is essential for economic growth. However, the relationship between economic growth and increased energy demand is not always a straightforward linear one. For example, under present conditions, 6% increase in India's Gross Domestic Product (GDP) would impose an increased demand of 9 % on its energy sector.

In this context, the ratio of energy demand to GDP is a useful indicator. A high ratio reflects energy dependence and a strong influence of energy on GDP growth. The developed countries, by focusing on energy efficiency and lower energy-intensive routes, maintain their energy to GDP ratios at values of less than 1. The ratios for developing countries are much higher.

India's Energy Needs

The plan outlay vis-à-vis share of energy is given in Figure 1.6. As seen from the Figure, 18.0% of the total five-year plan outlay is spent on the energy sector.

PLANWISE OUTLAY

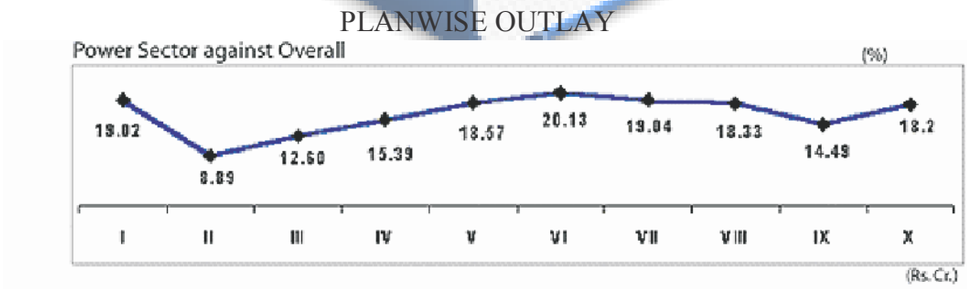

(Rs.Cr.)

	I	II	III	IV	V	VI	VII	VIII	IX	X
Power	393	427	1,020	2,448	7,294	19,265	34,273	79,589	1,24,526	2,70,276
Overall	2,069	4,800	8,094	15,902	39,287	95,700	1,80,000	4,34,100	8,59,200	14,84,131

Figure 1.6 Expenditure Towards Energy Sector

Energy Intensity

Energy intensity is energy consumption per unit of GDP. Energy intensity indicates the development stage of the country. India's energy intensity is 3.7 times of Japan, 1.55 times of USA, 1.47 times of Asia and 1.5 times of World average.

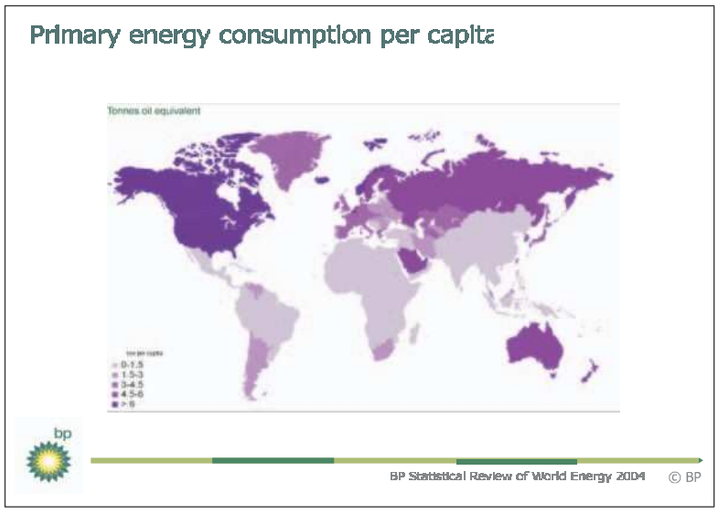

Figure 1.7 Per Capita Energy Consumption

1.8 Long Term Energy Scenario for India

Coal: Coal is the predominant energy source for power production in India, generating approximately 70% of total domestic electricity. Energy demand in India is expected to increase over the next 10-15 years; although new oil and gas plants are planned, coal is expected to remain the dominant fuel for power generation. Despite significant increases in total installed capacity dur- ing the last decade, the gap between electricity supply and demand continues to increase. The resulting shortfall has had a negative impact on industrial output and economic growth. However, to meet expected future demand, indigenous coal production will have to be greatly expanded. Production currently stands at around 290 Million tonnes per year, but coal demand is expected to more than double by 2010. Indian coal is typically of poor quality and as such requires to be beneficiated to improve the quality; Coal imports will also need to increase dramatically to satisfy industrial and power generation requirements.

Oil

India's demand for petroleum products is likely to rise from 97.7 million tonnes in 2001-02 to around 139.95 million tonnes in 2006-07, according to projections of the Tenth Five-Year Plan. The plan document puts compound annual growth rate (CAGR) at 3.6 % during the plan period. Domestic crude oil production is likely to rise marginally from 32.03 million tonnes in2001-02 to 33.97 million tonnes by the end of the 10th plan period (2006-07). India's self sufficiency in oil

has consistently declined from 60% in the 50s to 30% currently. Same is expected to go down to 8% by 2020. As shown in the figure 1.8, around 92% of India's total oil demand by 2020 has to be met by imports.

Natural Gas

India's natural gas production is likely to rise from 86.56 million cmpd in 2002-03 to 103.08 million cmpd in 2006-07. It is mainly based on the strength of a more than doubling of production by private operators to 38.25 mm cmpd.

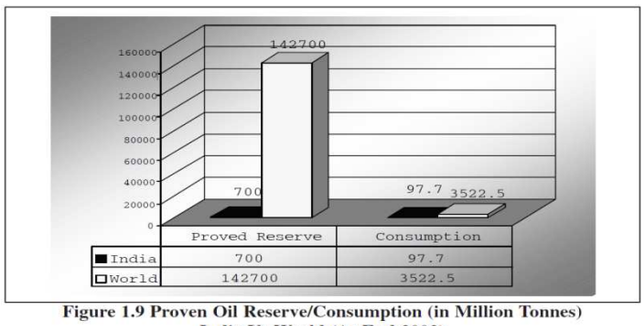

Figure 1.9 Proven Oil Reserve/Consumption (in Million Tonnes) India Vs World (At End 2002)

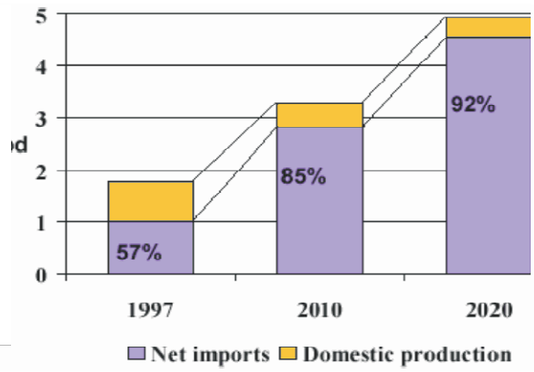

Electricity

India currently has a peak demand shortage of around 14% and an energy deficit of 8.4%. Keeping this in view and to maintain a GDP (gross domestic product) growth of 8% to 10%, the Government of India has very prudently set a target of 215,804 MW power generation capacity by March 2012 from the level of 100,010 MW as on March 2001, that is a capacity addition of 115,794 MW in the next 11 years. In the area of nuclear power the objective is to achieve 20,000 MW of nuclear generation capacity by the year 2020.

TABLE 1.3 INDIA'S PERSPECTIVE PLAN FOR POWER FOR ZERO DEFICIT POWER BY 2011/12 (SOURCE TENTH AND ELEVENTH FIVE-YEAR PLAN PROJECTIONS)

	Thermal (Coal) (MW)	**Gas / LNG / Diesel (MW)**	**Nuclear (MW)**	**Hydro (MW)**	**Total(MW)**
Installed capacity as on March 2001	61,157	Gas: 10,153 Diesel: 864	2720	25,116	100,010
Additional capacity (2001-2012)	53,333	20,408	9380	32,673	115,794
Total capacity as on March 2012	114,490 (53.0%)	31,425 (14.6%)	12,100 (5.6%)	57,789 (26.8%)	215,804

1.9 Energy Pricing in India

Price of energy does not reflect true cost to society. The basic assumption underlying efficiency of market place does not hold in our economy, since energy prices are undervalued and energy wastages are not taken seriously. Pricing practices in India like many other developing countries are influenced by political, social and economic compulsions at the state and central level. More often than not, this has been the foundation for energy sector policies in India. The Indian energy sector offers many examples of cross subsidies e.g., diesel, LPG and kerosene being subsidized by petrol, petroleum products for industrial usage and industrial, and commercial consumers of electricity subsidizing the agricultural and domestic consumers.

Coal

Grade wise basic price of coal at the pithead excluding statutory levies for run-of-mine (ROM) coal are fixed by Coal India Ltd from time to time. The pithead price of coal in India compares favorably with price of imported coal. In spite of this, industries still import coal due its higher calorific value and low ash content.

Oil

As part of the energy sector reforms, the government has attempted to bring prices for many of the petroleum products (naphtha, furnace oil, LSHS, LDO and bitumen) in line with international prices. The most important achievement has been the linking of diesel prices to international prices and a reduction in subsidy. However, LPG and kerosene, consumed mainly by domestic sectors, continue to be heavily subsidized. Subsidies and cross-subsidies have resulted in serious distortions in prices, as they do not reflect economic costs in many cases

Natural Gas

The government has been the sole authority for fixing the price of natural gas in the country. It has also been taking decisions on the allocation of gas to various competing consumers. The gas prices varies from Rs 5 to Rs.15 per cubic meter.

Electricity

Electricity tariffs in India are structured in a relatively simple manner. While high tension consumers are charged based on both demand (kVA) and energy (kWh), the low-tension (LT) consumer pays only for the energy consumed (kWh) as per tariff system in most of the electricity boards. The price per kWh varies significantly across States as well as customer segments with- in a State. Tariffs in India have been modified to consider the time of usage and voltage level of supply. In addition to the base tariffs, some State Electricity Boards have additional recovery from customers in form of fuel surcharges, electricity duties and taxes. For example, for an industrial consumer the demand charges may vary from Rs. 150 to Rs. 300 per kVA, whereas the energy charges may vary anywhere between Rs. 2 to Rs. 5 per kWh. As for the tariff adjustment mechanism, even when some States have regulatory commissions for tariff review, the decisions to effect changes are still political and there is no automatic adjustment mechanism, which can ensure recovery of costs for the electricity boards.

1.10 Energy and Environment

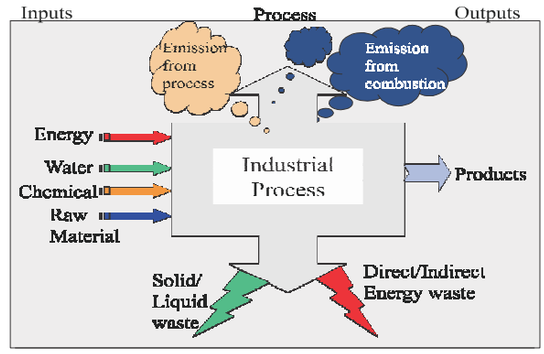

Figure 1.10 Inputs & Outputs of Process

The usage of energy resources in industry leads to environmental damages by polluting the atmosphere. Few of examples of air pollution are sulphur dioxide (SO_2), nitrous oxide (NO_X) and carbon monoxide (CO) emissions from boilers and furnaces, Chlorofluro carbons (CFC) emissions from refrigerants use, etc. In chemical and fertilizers industries, toxic gases are released. Cement plants and power plants spew out particulate matter. Typical inputs, outputs, and emissions for a typical industrial process are shown in Figure.

Air Pollution

A variety of air pollutants have known or suspected harmful effects on human health and the environment. These air pollutants are basically the products of combustion from fossil fuel use. Air pollutants from these sources may not only create problems near to these sources but also can cause problems far away. Air pollutants can travel long distances, chemically react in the atmosphere to produce secondary pollutants such as acid rain or ozone.

Evolutionary Trends in Pollution Problems

both developed and rapidly industrializing countries, the major historic air pollution problem has typically been high levels of smoke and SO_2 arising from the combustion of sulphur-containing fossil fuels such as coal for domestic and industrial purposes.

Smogs resulting from the combined effects of black smoke, sulphate / acid aerosol and fog have been seen in European cities until few decades ago and still occur in many cities in developing world. In developed countries, this problem has significantly reduced over recent decades as a result of changing fuel-use patterns; the increasing use of cleaner fuels such as natural gas, and the implementation of effective smoke and emission control policies.

In both developed and developing countries, the major threat to clean air is now posed by traffic emissions. Petrol- and diesel engine motor vehicles emit a wide variety of pollutants, principally carbon monoxide (CO), oxides of nitrogen (NOx), volatile organic compounds (VOCs) and particulates, which have an increasing impact on urban air quality.

In addition, photochemical reactions resulting from the action of sunlight on NO_2 and VOCs from vehicles leads to the formation of ozone, a secondary long-range pollutant, which impacts in rural areas often far from the original emission site. Acid rain is another long-range pollutant influenced by vehicle NOx emissions.

Industrial and domestic pollutant sources, together with their impact on air quality, tend to be steady-state or improving over time. However, traffic pollution problems are worsening world-wide. The problem may be particularly severe in developing countries with dramatically increasing vehicle population, infrastructural limitations, poor engine/emission control technologies and limited provision for maintenance or vehicle regulation.

The principle pollutants produced by industrial, domestic and traffic sources are sulphur dioxide, nitrogen oxides, particulate matter, carbon monoxide, ozone, hydrocarbons, benzene, 1,3-butadiene, toxic organic micro pollutants, lead and heavy metals.

Brief introduction to the principal pollutants are as follows:

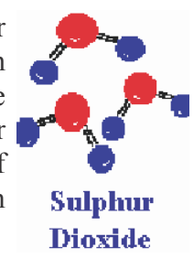

Sulphur dioxide is a corrosive acid gas, which combines with water vapour in the atmosphere to produce acid rain. Both wet and dry deposition have been implicated in the damage and destruction of vegetation and in the degradation of soils, building materials and watercourses. SO_2 in ambient air is also associated with asthma and chronic bronchitis. The principal source of this gas is power stations and industries burning fossil fuels, which contain sulphur.

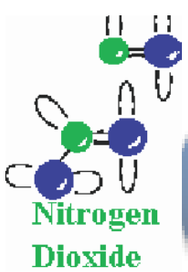

Nitrogen oxides are formed during high temperature combustion processes from the oxidation of nitrogen in the air or fuel. The principal source of nitrogen oxides - nitric oxide (NO) and nitrogen dioxide (NO_2), collectively known as NOx is road traffic. NO and NO_2 concentrations are greatest in urban areas where traffic is heaviest. Other important sources are power stations and industrial processes.

Nitrogen oxides are released into the atmosphere mainly in the form of NO, which is then readily oxidized to NO_2 by reaction with ozone.

Elevated levels of NO_x occur in urban environments under stable meteorological conditions, when the air mass is unable to disperse.

Nitrogen dioxide has a variety of environmental and health impacts. It irritates the respiratory system and may worsen asthma and increase susceptibility to infections. In the presence of sunlight, it reacts with hydrocarbons to produce photochemical pollutants such as ozone.

Nitrogen oxides combine with water vapour to form nitric acid. This nitric acid is in turn removed from the atmosphere by direct deposition to the ground, or transfer to aqueous droplets (e.g. cloud or rainwater), thereby contributing to acid deposition.

Acidification from SO_2 and NO_x

Acidification of water bodies and soils, and the consequent impact on agriculture, forestry and fisheries are the result of the re-deposition of acidifying compounds resulting principally from the oxidation of primary SO_2 and NO_2 emissions from fossil fuel combustion. Deposition may be by either wet or dry processes, and acid deposition studies often need to examine both of these acidification routes.

Airborne **particulate matter** varies widely in its physical and chemical composition, source and particle size. PM_{10} particles (the fraction of particulates in air of very small size (<10 µm)) are of major current concern, as they are small enough to penetrate deep into the lungs and so potentially pose significant health risks. In addition, they may carry surface-absorbed carcinogenic compounds into the lungs. Larger particles, combustion, where transport of hot exhaust vapour into a cooler exhaust pipe can lead to spontaneous nucleation of "carbon" particles before emission. Secondary particles are typically formed when low volatility products are generated in the atmosphere, for example the oxidation of sulphur dioxide to sulphuric acid. The atmospheric lifetime of particulate matter is strongly related to particle size, but may be as long as 10 days for particles of about 1mm in diameter.

Concern about the potential health impacts of PM_{10} has increased very rapidly over recent years. Increasingly, attention has been turning towards monitoring of the smaller particle fraction $PM_{2.5}$ capable of penetrating deepest into the lungs, or to even smaller size fractions or total particle numbers.

Carbon monoxide (CO) is a toxic gas, which is emitted into the atmosphere as a result of combustion processes, and from oxidation of hydrocarbons and other organic compounds. In urban areas, CO is produced almost entirely (90%) from road traffic emissions. CO at levels found in ambient air may reduce the oxygen-carrying capacity of the blood. It survives in the atmosphere for a period of approximately 1 month and finally gets oxidized to carbon dioxide (CO_2).

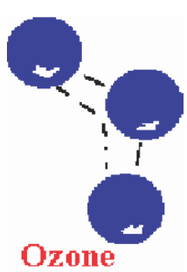

Ground-level ozone (O_3), unlike other primary pollutants mentioned above, is not emitted directly into the atmosphere, but is a secondary pollutant produced by reaction between nitrogen dioxide (NO_2), hydrocarbons and sunlight. Ozone can irritate the eyes and air passages causing breathing difficulties and may increase susceptibility to infection. It is a highly reactive chemical, capable of attacking surfaces, fabrics and rubber materials. Ozone is also toxic to some crops, vegetation and trees.

Whereas nitrogen dioxide (NO_2) participates in the formation of ozone, nitrogen oxide (NO) destroys ozone to form oxygen (O_2) and nitrogen dioxide (NO_2). For this reason, ozone levels are not as high in urban areas (where high levels of NO are emitted from vehicles) as in rural areas. As the nitrogen oxides and hydrocarbons are transported out of urban areas, the ozone-destroying NO is oxidized to NO_2, which participates in ozone formation.

Hydrocarbons

There are two main groups of hydrocarbons of concern: volatile organic compounds (VOCs) and polycyclic aromatic hydrocarbons (PAHs). VOCs are released in vehicle exhaust gases either as unburned fuels or as combustion products, and are also emitted by the evaporation of solvents and motor fuels. Benzene and 1,3-butadiene are of particular concern, as they are known carcinogens. Other VOCs are important because of the role they play in the photochemical formation of ozone in the atmosphere.

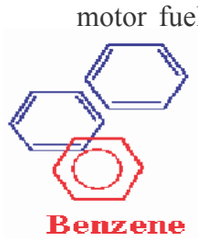

Benzene is an aromatic VOC, which is a minor constituent of petrol (about 2% by volume). The main sources of benzene in the atmosphere are the distribution and combustion of petrol. Of these, combustion by petrol vehicles is the single biggest source (70% of total emissions) whilst the refining, distribution and evaporation of petrol from vehicles accounts for approximately a further 10% of total emissions. Benzene is emitted in vehicle exhaust not only as unburnt fuel but also as a product of the decomposition of other aromatic compounds. Benzene is a known human carcinogen.

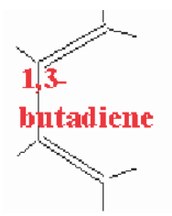

1,3-butadiene, like benzene, is a VOC emitted into the atmosphere principally from fuel combustion of petrol and diesel vehicles. Unlike benzene, however, it is not a constituent of the fuel but is produced by the combustion of olefins. 1,3-butadiene is also an important chemical in certain industrial processes, particularly the manufacture of synthetic rubber. It is handled in bulk at a small number of industrial locations. Other than in the vicinity of such locations, the dominant source of 1,3-butadiene in the atmosphere are the motor vehicles. 1,3 Butadiene is also a known, potent, human carcinogen.

TOMPs (Toxic Organic Micro pollutants) are produced by the incomplete combustion of fuels. They comprise a complex range of chemicals some of which, although they are emitted in very small quantities, are highly toxic or and carcinogenic. Compounds in this category include:

· PAHs (PolyAromatic Hydrocarbons)

· PCBs (PolyChlorinated Biphenyls)

· Dioxins

· Furans

Heavy Metals and Lead

Particulate metals in air result from activities such as fossil fuel combustion (including vehicles), metal processing industries and waste incineration. There are currently no emission standards for metals other than lead. Lead is a cumulative poison to the central nervous system, particularly detrimental to the mental development of children.

Lead is the most widely used non-ferrous metal and has a large number

of industrial applications. Its single largest industrial use worldwide is in the manufacture of batteries and it is also used in paints, glazes, alloys, radiation shielding, tank lining and piping.

As tetraethyl lead, it has been used for many years as an additive in petrol; with the increasing use of unleaded petrol, however, emissions and concentrations in air have reduced steadily in recent years.

Climatic Change

Human activities, particularly the combustion of fossil fuels, have made the blanket of greenhouse gases (water vapour, carbon dioxide, methane, ozone etc.) around the earth thicker. The resulting increase in global temperature is altering the complex web of systems that allow life to thrive on earth such as rainfall, wind patterns, ocean currents and distribution of plant and animal species.

Greenhouse Effect and the Carbon Cycle

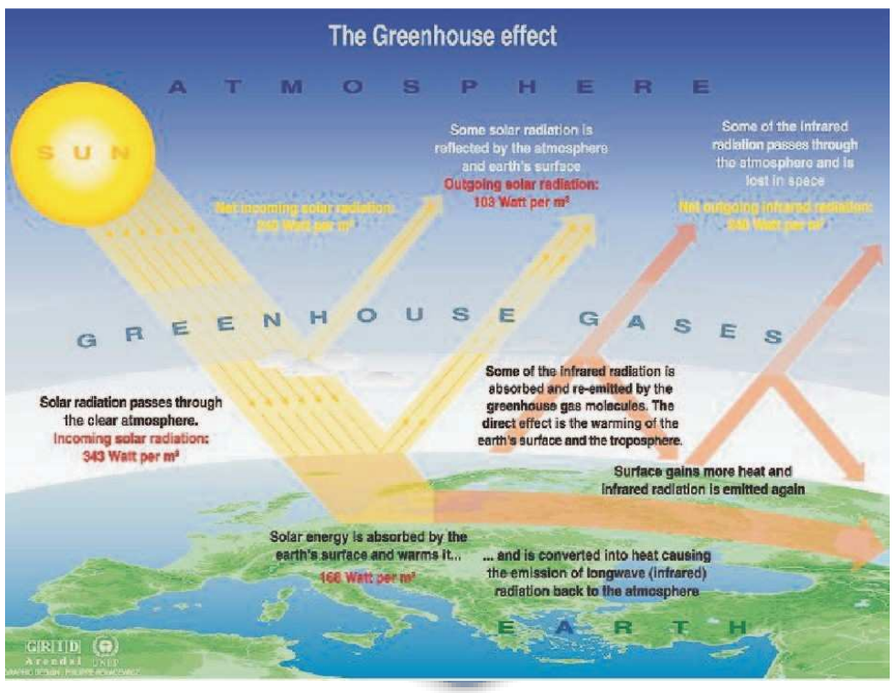

Fig 1.11 The green house effect

Life on earth is made possible by energy from the sun, which arrives mainly in the form of visible light. About 30 percent of the sunlight is scattered back into space by outer atmosphere and the balance 70 percent reaches the earth's surface, which reflects it in form of infrared radiation. The escape of slow moving infrared radiation is delayed by the green house gases. A thicker blanket of greenhouse gases traps more infrared radiation and increase the earth's temperature (Refer Figure 1.11).

Greenhouse gases makeup only 1 percent of the atmosphere, but they act as a blanket around the earth, or like a glass roof of a greenhouse and keep the earth 30 degrees warmer than it would be otherwise - without greenhouse gases, earth would be too cold to live. Human activities that are responsible for making the greenhouse layer thicker are emissions of carbon dioxide from the combustion of coal, oil and natural gas; by additional methane and nitrous oxide from farming activities and changes in land use; and by several man made gases that have a long life in the atmosphere.

The increase in greenhouse gases is happening at an alarming rate. If greenhouse gases emissions continue to grow at current rates, it is almost certain that the atmospheric levels of carbon dioxide will increase twice or thrice from pre-industrial levels during the 21st century.

Even a small increase in earth's temperature will be accompanied by changes in climate-such as cloud cover, precipitation, wind patterns and duration of seasons. In an already highly crowded and stressed earth, millions of people depend on weather patterns, such as monsoon rains, to continue as they have in the past. Even minimum changes will be disruptive and difficult.

Carbon dioxide is responsible for 60 percent of the "enhanced greenhouse effect". Humans are burning coal, oil and natural gas at a rate that is much faster than the rate at which these fossil fuels were created. This is releasing the carbon stored in the fuels into the atmosphere and upsetting the carbon cycle (a precise balanced system by which carbon is exchanged between the air, the oceans and land vegetation taking place over millions of years). Currently, carbon dioxide levels in the atmospheric are rising by over 10 percent every 20 years.

Current Evidence of Climatic Change

Cyclones, storm, hurricanes are occurring more frequently and floods and draughts are more intense than before. This increase in extreme weather events cannot be explained away as random events.

This trend toward more powerful storms and hotter, longer dry periods is predicted by computer models. Warmer temperatures mean greater evaporation, and a warmer atmosphere is able to hold more moisture and hence there is more water aloft that can fall as precipitation. Similarly, dry regions are prone to lose still more moisture if the weather is hotter and hence this leads to more severe droughts and desertification.

Future Effects

Even the minimum predicted shifts in climate for the 21st century are likely to be significant and disruptive. Predictions of future climatic changes are wide-ranging. The global temperature may climb from 1.4 to 5.8 degrees C; the sea level may rise from 9 to 88 cm. Thus, increases in sea level this century are expected to range from significant to catastrophic. This uncertainty reflects the complexity, interrelatedness, and sensitivity of the natural systems that make up the climate.

Severe Storms and Flooding

The minimum warming forecast for the next 100 years is more than twice the 0.6 degree C increase that has occurred since 1900 and that earlier increase is already having marked consequences. Extreme weather events, as predicted by computer models, are striking more often and can be expected to intensify and become still more frequent. A future of more severe storms and floods along the world's increasingly crowded coastlines is likely.

Food Shortages

Although regional and local effects may differ widely, a general reduction is expected in potential crop yields in most tropical and sub-tropical regions. Mid-continental areas such as the United States' "grain belt" and vast areas of Asia are likely to become dry. Sub-Saharan Africa where dry land agriculture relies solely on rain, the yields would decrease dramatically even with minimum increase in temperature. Such changes could cause disruptions in food supply in a world is already afflicted with food shortages and famines.

Dwindling Freshwater supply

Salt-water intrusion from rising sea levels will reduce the quality and quantity of freshwater supplies. This is a major concern, since billions of people on earth already lack access to fresh-water. Higher ocean levels already are contaminating underground water sources in many parts of the world.

Loss of Biodiversity

Most of the world's endangered species (some 25 per cent of mammals and 12 per cent of birds) may become extinct over the next few decades as warmer conditions alter the forests, wetlands, and rangelands they depend on, and human development blocks them from migrating else where.

Increased Diseases

Higher temperatures are expected to expand the range of some dangerous "vector-borne" diseases, such as malaria, which already kills 1 million people annually, most of them children.

A World Under Stress

Ongoing environmentally damaging activities such as overgrazing, deforestation, and denuded agricultural soils means that nature will be more vulnerable than previously to changes in climate.

Similarly, the world's vast human population, much of it poor, is vulnerable to climate stress. Millions live in dangerous places such as floodplains or in slums around the big cities of the developing world. Often there is nowhere else for population to move. In the distant past,

man and his ancestors migrated in response to changes in habitat. There will be much less room for migration in future.

Global warming almost certainly will be unfair. The industrialized countries of North America and Western Europe, and other countries such as Japan, are responsible for the vast amount of past and current greenhouse-gas emissions. These emissions are incurred for the high standards of living enjoyed by the people in those countries.

Yet those to suffer most from climate change will be in the developing world. They have fewer resources for coping with storms, with floods, with droughts, with disease outbreaks, and with disruptions to food and water supplies. They are eager for economic development themselves, but may find that this already difficult process has become more difficult because of climate change. The poorer nations of the world have done almost nothing to cause global warming yet is most exposed to its effects.

Acid Rain

Acid rain is caused by release of SO_X and NO_X from combustion of fossil fuels, which then mix

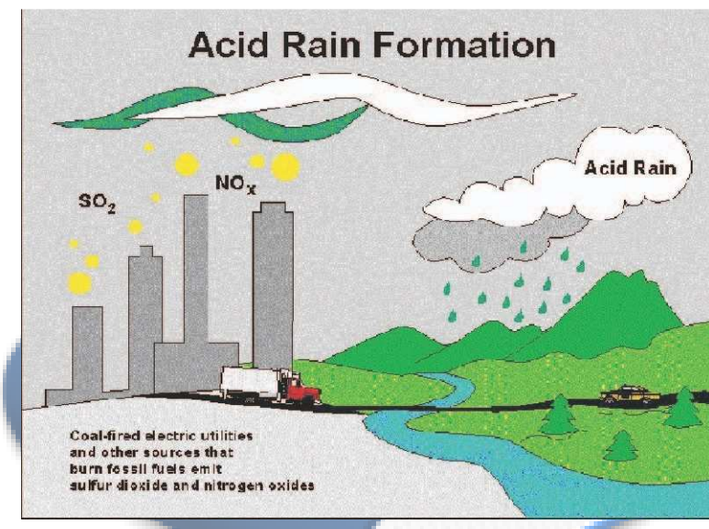

Fig 1.12 Acid Rain

with water vapor in atmosphere to form sulphuric and nitric acids respectively (Refer Figure 1.12).

The effects of acid rain are as follows:

- Acidification of lakes, streams, and soils
- Direct and indirect effects (release of metals, For example: Aluminum which washes away plant nutrients)

- Killing of wildlife (trees, crops, aquatic plants, and animals)
- Decay of building materials and paints, statues, and sculptures
- Health problems (respiratory, burning- skin and eyes)

1.11 Energy Security

The basic aim of energy security for a nation is to reduce its dependency on the imported energy sources for its economic growth.

India will continue to experience an energy supply shortfall throughout the forecast period. This gap has widened since 1985, when the country became a net importer of coal. India has been unable to raise its oil production substantially in the 1990s. Rising oil demand of close to

10 percent per year has led to sizable oil import bills. In addition, the government subsidizes refined oil product prices, thus compounding the overall monetary loss to the government.

Imports of oil and coal have been increasing at rates of 7% and 16% per annum respectively during the period 1991-99. The dependence on energy imports is projected to increase in the future. Estimates indicate that oil imports will meet 75% of total oil consumption requirements and coal imports will meet 22% of total coal consumption

As per requirements in 2006. The imports of gas and LNG (liquefied natural gas) are likely to increase in the coming years. This energy import dependence implies vulnerability to external price shocks and supply fluctuations, which threaten the energy security of the country.

Increasing dependence on oil imports means reliance on imports from the Middle East, a region susceptible to disturbances and consequent disruptions of oil supplies. This calls for diversification of sources of oil imports. The need to deal with oil price fluctuations also necessitates measures to be taken to reduce the oil dependence of the economy, possibly through fiscal measures to reduce demand, and by developing alternatives to oil, such as natural gas and renewable energy.

Some of the strategies that can be used to meet future challenges to their energy security are

- Building stockpiles
- Diversification of energy supply sources
- Increased capacity of fuel switching
- Demand restraint,
- Development of renewable energy sources.
- Energy efficiency

- Sustainable development

Although all these options are feasible, their implementation will take time. Also, for countries like India, reliance on stockpiles would tend to be slow because of resource constraints. Besides, the market is not sophisticated enough or the monitoring agencies experienced enough to predict the supply situation in time to take necessary action. Insufficient storage capacity is another cause for worry and needs to be a augmented, if India has to increase its energy stock pile.

However, out of all these options, the simplest and the most easily attainable is reducing demand through persistent energy conservation efforts.

1.12 Energy Conservation and its Importance

Coal and other fossil fuels, which have taken three million years to form, are likely to deplete soon. In the last two hundred years, we have consumed 60% of all resources. For sustainable development, we need to adopt energy efficiency measures.

Today, 85% of primary energy comes from non- renewable, and fossil sources (coal, oil, etc.). These reserves are continually diminishing with increasing consumption and will not exist for future generations (see Figure 1.13).

What is Energy Conservation?

Energy Conservation and Energy Efficiency are separate, but related concepts. Energy conservation is achieved when growth of energy consumption is reduced, measured in physical terms. Energy Conservation can, therefore, be the result of several processes or developments, such as productivity increase or technological progress. On the other hand Energy efficiency is achieved when energy intensity in a specific product, process or area of production or consumption is reduced without affecting output, consumption or comfort levels. Promotion of energy efficiency will contribute to energy conservation and is there- fore an integral part of energy conservation promotional policies.

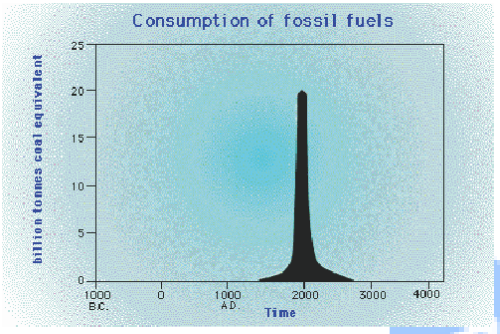

Fig 1.13

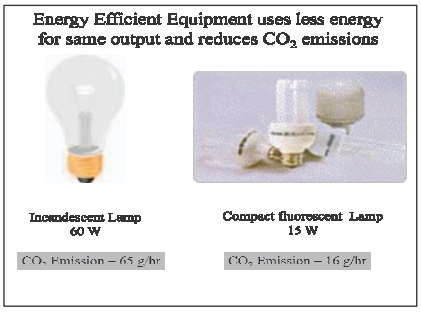

Fig 1.14

Energy efficiency is often viewed as a resource option like coal, oil or natural gas. It provides additional economic value by preserving the resource base and reducing pollution. For example, replacing traditional light bulbs with Compact Fluorescent Lamps (CFLs) means you will use only 1/4th of the energy to light a room. Pollution levels also reduce by the same amount (refer Figure 1.14).

Nature sets some basic limits on how efficiently energy can be used, but in most cases our products and manufacturing processes are still a long way from operating at this theoretical limit. Very simply, energy efficiency means using less energy to perform the same function. Although, energy efficiency has been in practice ever since the first oil crisis in 1973, it has today assumed even more importance because of being the most cost-effective and reliable means of mitigating the global climatic change. Recognition of that potential has led to high expectations for the control of future CO_2 emissions through even more energy efficiency improvements than have occurred in the past. The industrial sector accounts for some 41 per cent of global primary energy demand and approximately the same share of CO_2 emissions.

1.13 Energy Strategy for the Future

The energy strategy for the future could be classified into immediate, medium-term and long- term strategy. The various components of these strategies are listed below:

Immediate-term strategy:

- Rationalizing the tariff structure of various energy products.
- Optimum utilization of existing assets

- Efficiency in production systems and reduction in distribution losses, including those in traditional energy sources.
- Promoting R&D, transfer and use of technologies and practices for environmentally sound energy systems, including new and renewable energy sources.

Medium-term strategy:

- Demand management through greater conservation of energy, optimum fuel mix, structural changes in the economy, an appropriate model mix in the transport sector, i.e. greater dependence on rail than on road for the movement of goods and passengers and a shift away from private modes to public modes for passenger transport; changes in design of different products to reduce the material intensity of those products, recycling, etc.
- There is need to shift to less energy-intensive modes of transport. This would include measures to improve the transport infrastructure viz. roads, better design of vehicles, use of compressed natural gas (CNG) and synthetic fuel, etc. Similarly, better urban planning would also reduce the demand for energy use in the transport sector.
- There is need to move away from non-renewable to renewable energy sources viz. solar, wind, biomass energy, etc.

Long-term strategy:

Efficient generation of energy resources

- Efficient production of coal, oil and natural gas
- Reduction of natural gas flaring

Improving energy infrastructure

- Building new refineries
- Creation of urban gas transmission and distribution network
- Maximizing efficiency of rail transport of coal production.
- Building new coal and gas fired power stations.

Enhancing energy efficiency

- Improving energy efficiency in accordance with national, socio-economic, and environ- mental priorities
- Promoting of energy efficiency and emission standards
- Labeling programs for products and adoption of energy efficient technologies in large industries

Deregulation and privatization of energy sector

- Reducing cross subsidies on oil products and electricity tariffs
- Decontrolling coal prices and making natural gas prices competitive
- Privatization of oil, coal and power sectors for improved efficiency.

Investment legislation to attract foreign investments.

- Streamlining approval process for attracting private sector participation in power generation, transmission and distribution .

Bureau of Energy Efficiency (BEE):

- The mission of Bureau of Energy Efficiency is to institutionalize energy efficiency services, enable delivery mechanisms in the country and provide leadership to energy efficiency in all sectors of economy. The primary objective would be to reduce energy intensity in the Indian Economy.
- The general superintendence, directions and management of the affairs of the Bureau is vested in the Governing Council with 26 members. The Council is headed by Union Minister of Power and consists of members represented by Secretaries of various line Ministries, the CEOs of technical agencies under the Ministries, members representing equipment and appliance manufacturers, industry, architects, consumers and five power regions representing the states. The Director General of the Bureau shall be the exfficio member-secretary of the Council.
- The BEE will be initially supported by the Central Government by way of grants through budget, it will, however, in a period of 5-7 years become self-sufficient. It would be authorized to collect appropriate fee in discharge of its functions assigned to it. The BEE will also use the Central Energy Conservation Fund and other funds raised from various sources for innovative financing of energy efficiency projects in order to promote energy efficient investment.

1.14 DISTRIBUTED GENERATION

1.0 Distributed Generation Basics

What is Distributed Generation?

Distributed generation (or DG) generally refers to small-scale (typically 1 kW – 50 MW) electric power generators that produce electricity at a site close to customers or that are tied to an electric distribution system. Distributed generators include, but are not limited to synchronous generators, induction generators, reciprocating engines, micro-turbines (combustion turbines that run on high-energy fossil fuels such as oil, propane, natural gas, gasoline or diesel), combustion gas turbines, fuel cells, solar photo-voltaic, and wind turbines.

Applications of Distributed Generating Systems

There are many reasons a customer may choose to install a distributed generator. DG can be used to generate a customer's entire electricity supply; for peak shaving (generating a portion of a customer's electricity onsite to reduce the amount of electricity purchased during peak price periods); for standby or emergency generation (as a backup to Wires Owner's power supply); as a green power source (using renewable technology); or for increased reliability. In some remote locations, DG can be less costly as it eliminates the need for expensive construction of distribution and/or transmission lines.

Benefits of Distributed Generating Systems

Distributed Generation:

Has a lower capital cost because of the small size of the DG (although the investment cost per kVA of a DG can be much higher than that of a large power plant). May reduce the need for large infrastructure construction or upgrades because the

DG can be constructed at the load location.

If the DG provides power for local use, it may reduce pressure on distribution and

transmission lines.

With some technologies, produces zero or near-zero pollutant emissions over its

useful life (not taking into consideration pollutant emissions over the entire product lifecycle ie. pollution produced during the manufacturing, or after decommissioning of the DG system).

With some technologies such as solar or wind, it is a form of renewable energy. Can increase power reliability as back-up or stand-by power to customers. Offers customers a choice in meeting their energy needs.

Challenges associated with Distributed Generating Systems

There are no uniform national interconnection standards addressing safety, power quality and reliability for small distributed generation systems. The current process for interconnection is not standardized among provinces.

Interconnection may involve communication with several different organizations The environmental regulations and permit process that have been developed for larger distributed generation projects make some DG projects uneconomical. Contractual barriers exist such as liability insurance requirements, fees and charges, and extensive paperwork.

Solar Energy:

Introduction:

Solar energy is an important, clean, cheap and abundantly available renewable energy. It is received on Earth in cyclic, intermittent and dilute form with very low power density 0 to 1 kW/m2.Solar energy received on the ground level is affected by atmospheric clarity, degree of latitude, etc. For design purpose, the variation of available solar power, the optimum tilt angle of solar flat plate collectors, the location and orientation of the heliostats should be calculated.

Units of solar power and solar energy:
In SI units, energy is expressed in Joule. Other units are angley and Calorie where

1 angley = 1 Cal/cm2.day

1 Cal = 4.186 J

For solar energy calculations, the energy is measured as an hourly or monthly or yearly average and is expressed in terms of kJ/m2/day or kJ/m2/hour. Solar power is expressed in terms of W/m2 or kW/m2.

Essential subsystems in a solar energy plant:

1. **Solar collector or concentrator**: It receives solar rays and collects the energy. It may be of following types:

a) Flat plate type without focusing
b) Parabolic trough type with line focusing
c) Paraboloid dish with central focusing
d) Fresnel lens with centre focusing
e) Heliostats with centre receiver focusing

2. **Energy transport medium**: Substances such as water/ steam, liquid metal or gas are used to
transport the thermal energy from the collector to the heat exchanger or thermal storage. In solar PV systems energy transport occurs in electrical form.

3. **Energy storage**: Solar energy is not available continuously. So we need an energy storage medium for maintaining power supply during nights or cloudy periods. There are three major types of energy

storage: a) Thermal energy storage; b) Battery storage; c) Pumped storage hydro-electric plant.

4. **Energy conversion plant**: Thermal energy collected by solar collectors is used for producing steam, hot water, etc. Solar energy converted to thermal energy is fed to steam-thermal or gas-thermal power plant.

5. **Power conditioning, control and protection system**: Load requirements of electrical energy vary with time. The energy supply has certain specifications like voltage, current, frequency, power etc.

The power conditioning unit performs several functions such as control, regulation, conditioning,
protection, automation, etc.

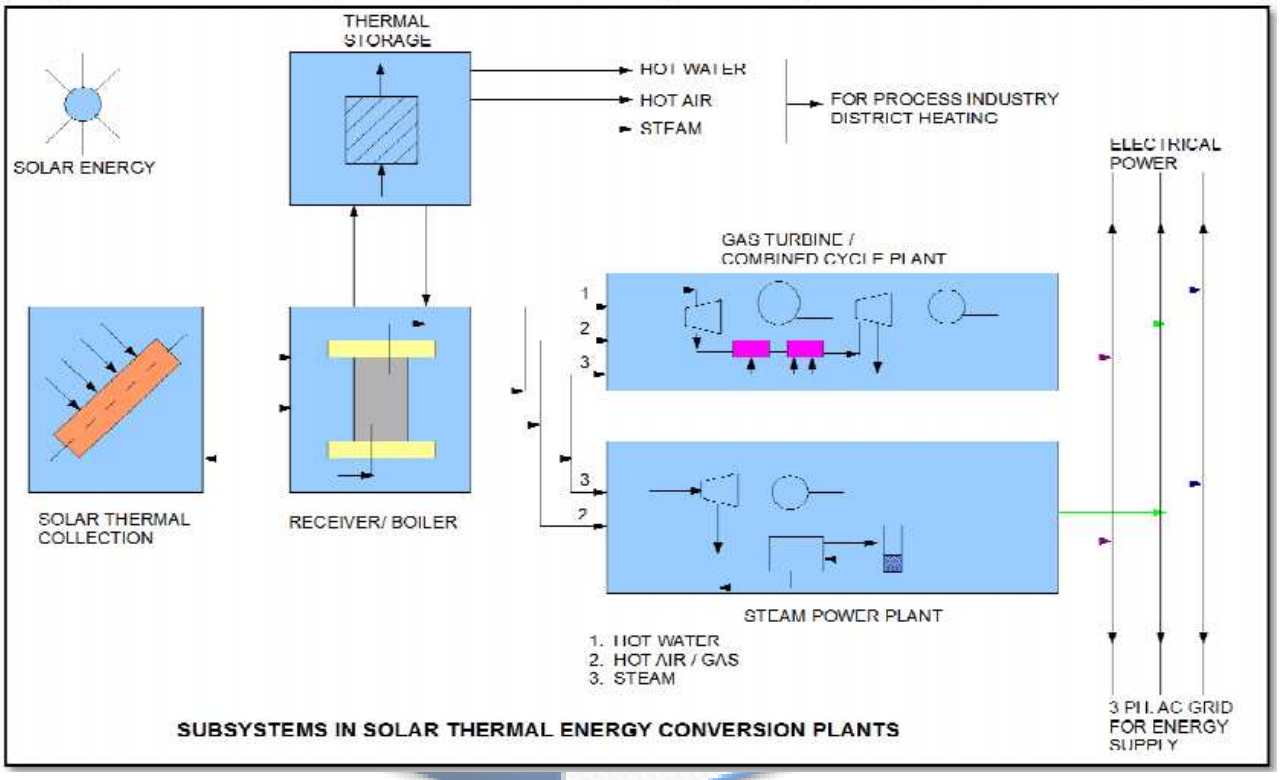

Fig Subsystems in solar thermal energy conversion plants

6. **Alternative or standby power supply**: The backup may be obtained as power from electrical
network or standby diesel generator.

Energy from the sun:
The sun radiates about 3.8 x 10^{26} W of power in all the directions. Out of this about 1.7 x 10^{17} W is
received by earth. The average solar radiation outside the earth's atmosphere is 1.35 kW/m^2 varying from 1.43 kW/m^2 (in January) to 1.33 kW/m^2(in July).

Solar thermal energy (STE) is a form of energy and a technology for harnessing solar energy to generate thermal energy or electrical energy for use in industry,

oupled thermosiphon

and in the residential and commercial sectors. The first installation of solar thermal energy equipment occurred in the Sahara Desert approximately in 1910

when a steam engine was run on steam produced by sunlight. Because liquid fuel engines were developed and found more convenient, the Sahara project was abandoned, only to be revisited several decades late.

Solar thermal collectors are classified by the United States Energy Information Administration as low-, medium-, or high-temperature collectors. Low-temperature collectors are flat plates generally used to heat swimming pools. Medium-temperature collectors are also usually flat plates but are used for heating water or air for residential and commercial use. High-temperature collectors concentrate sunlight using mirrors or lenses and are generally used for fulfilling heat requirements up to 300 deg C / 20 bar pressure in industries, and for electric power production. However, there is a term that used for both the applications. Concentrated Solar Thermal (CST) for fulfilling heat requirements in industries and Concentrated Solar Power (CSP) when the heat collected is used for power generation. CST and CSP are not replaceable in terms of application.

The 377 MW Ivanpah Solar Power Facility is the largest solar power plant in the world, located in the Mojave Desert of California. Other large solar thermal plants include the SEGS installation (354 MW), also in the Mojave, as well as the Solnova Solar Power Station (150 MW), the Andasol solar power station (150 MW), and Extresol Solar Power ion (100 MW), allin Spain.

The first three units of Solnova in the foreground, with the two towers of the PS10 and PS20 solar power stations in the background.

A solar thermal collector system gathers the heat from the solar radiation and gives it to the heat transport fluid. The heat-transport fluid receives the heat from the collector and delivers it to the thermal storage tank, boiler steam generator, heat exchanger etc. Thermal

storage system stores heat for a few hours. The heat is released during cloudy hours and at night. Thermal-electric conversion system receives thermal energy and drives steam turbine generator or gas turbine generator. The electrical energy is supplied to the electrical load or to the AC grid. Applications of solar thermal energy systems range from simple solar cooker of 1 kW rating to complex solar central receiver thermal power plant of 200 MW rating.

SOLAR COLLECTORS

Solar thermal energy is the most readily available source of energy. The Solar energy is most important kind of non-conventional source of energy which has been used since ancient times, but in a most primitive manner. The abundant solar energy available is suitable for harnessing for a number of applications. The application of solar thermal energy system ranges from solar cooker of 1 kw to power plant of 200MW. These systems are grouped into low temperature (<150°C), medium temperature (150-300°C) applications.

Solar Collectors

Solar collectors are used to collect the solar energy and convert the incident radiations into thermal energy by absorbing them. This heat is extracted by flowing fluid (air or water or mixture with antifreeze) in the tube of the collector for further utilization in different applications. The collectors are classified as;

- Non concentrating collectors
- Concentrating (focusing) collectors

Non Concentrating Collectors

In these collectors the area of collector to intercept the solar radiation is equal to the absorber plate and has concentration ratio of 1. Flat Plate Collectors (Glaze Type) Flat plate collector is most important part of any solar thermal energy system. It is simplest in design and both direct and diffuse radiations are absorbed by collector and converted into useful heat. These collectors are suitable for heating to temperature below 100°C. The main advantages of flat plate collectors are:

- It utilizes the both the beam as well as diffuse radiation for heating.
- Requires less maintenance.

Disadvantages

- Large heat losses by conduction and radiation because of large area.
- No tracking of sun.
- Low water temperature is achieved.

The constructional details of flat plate collector is given below

(a) Insulated Box: The rectangular box is made of thin G.I sheet and is insulated from sides and bottom using glass or mineral wool of thickness 5 to 8 cm to reduce losses from conduction to back and side wall. The box is tilted at due south and a tilt angle depends on the latitude of location. The face area of the collector box is kept between 1 to 2 m^2.

(b) Transparent Cover: This allows solar energy to pass through and reduces the convective heat losses from the absorber plate through air space. The transparent tampered glass cover is placed on top of rectangular box to trap the solar energy and sealed by rubber gaskets to prevent the leakage of hot air. It is made of plastic/glass but glass is most favourable because of its transmittance and low surface degradation. However with development of improved quality of plastics, the degradation quality has been improved. The plasticsare available at low cost, light in weight and can be used to make tubes, plates and cover but are suitable for low temperature application 70-120^oC with single cover plate or up to 150^oC using double cover plate. The thickness of glass cover 3 to 4 mm is commonly used and 1 to 2 covers with spacing 1.5 to 3 cm are generally used between plates. The temperature of glass cover is lower than the absorber plate and is a good absorber of thermal energy and reduces convective and radiative losses of sky.

(c) Absorber Plate: It intercepts and absorbs the solar energy. The absorber plate is made of copper, aluminum or steel and is in the thickness of1 to 2 mm. It is the most important part of collector along with the tubes products passing the liquid or air to be heated. The plate absorbs the maximum solar radiation incident on it through glazing (cover plate) and transfers the heat to the tubes in contact with minimum heat losses to atmosphere. The plate is black painted and provided with selective material coating to increase its absorption and reduce the emission. The absorber plate has high absorption (80-95%) and low transmission/reflection.

(d) Tubes: The plate is attached to a series of parallel tubes or one serpentine tube through which water or other liquid passes. The tubes are made of copper, aluminum or steel in the diameter 1 to 1.5 cm and are brazed, soldered on top/bottom of the absorber water equally in all the tubes and collect it back from the other end. The header pipe is made of same material as tube and of larger diameter. Now-a-days the tubes are made of plastic but they have low thermal conductivity and higher coefficient of expansion than metals.

Copper and aluminum are likely to get corroded with saline liquids and steel tubes within hibitors are used at such places.

Removal of Heat: These systems are best suited to applications that require low temperatures. Once the heat is absorbed on the absorber plate it must be removed fast and delivered to the place of storage for further use. As the liquid circulates through the tubes, it absorbs the heat from absorber plate of the collectors. The heated liquid moves slowly and the losses from collector will increase because of rise of high temperature of collector and will lower the efficiency. Flat-plate solar collectors are less efficient in cold weather than in warm weather. Factors affecting the Performance of Flat Plate Collector.

The different factors affecting the performance of system are:

(a) Incident Solar Radiation: The efficiency of collector is directly related with solar radiation falling onit and increases with rise in temperature.

(b) Number of Cover Plate: The increase in number of cover plate reduces the internal convective heat losses but also prevents the transmission of radiation inside the collector. More than two cover plate should not be used to optimize the system.

(c) Spacing: The more space between the absorber and cover plate the less internal heat losses. The collector efficiency will be increased. However on the other hand, increase in space between them provides the shading by side wall in the morning and evening and reduces the absorbed solar flux by 2-3% of system. The spacing between absorber and cover plate is kept 2-3 cm to balance the problem.

(d) Collector Tilt: The flat plate collectors do not track the sun and should be tilted at angle of latitude of the location for an average better performance. However with changing declination angle with seasons the optimum tilt angle is kept $\Phi \pm 15^{o}$.

The collector is placed with south facing at northern hemisphere to receive maximum radiation throughout the day.

(e) Selective Surface: Some materials like nickel black (α= 0.89, ε= 0.15) and black chrome (α= 0.87, ε= 0.088), copper oxide (α= 0.89, ε= 0.17) etc. are applied chemically on the surface of absorber in a thin layer of thickness 0.1 μm. These chemicals have high degree of absorption (α) to short wave radiation (< 4 μm) and low emission (ε) of long wave radiations (> 4 μm). The higher absorption of solar energy increase the temperature of absorber plate and working fluid. The top losses reduce and the efficiency of the collector increases. The selective surface should be able to withstand high temperature of 300-400°C, cost less, should not oxidize and be corrosive resistant. The property of material should not change with time.

(f) Inlet Temperature: With increase in inlet temperature of working fluid the losses increase to ambient. The high temperature fluid absorbed the less heat from absorber plate because of low temperature difference and increases the top loss coefficient. Therefore the efficiency of collector get reduced with rise in inlet temperature.

(g) Dust on cover Plate: The efficiency of collector decreases with dust particles on the cover plate because the transmission radiation decreases by 1%. Frequent cleaning is required to get the maximum efficiency of collector.

Concentrating Collectors

Concentrating collector is a device to collect solar energy with high intensity of solar radiation on the energy absorbing surface. Such collectors use optical system in the form of reflectors or refractors.

These collectors are used for medium (100-300° C) and high-temperature (above 300°C) applications such as steam production for the generation of electricity. The high temperature is achieved at absorber because of reflecting arrangement provided for concentrating the radiation at required location using mirrors and lenses.

These collectors are best suited to places having more number of clear days in a year.

The area of the absorber is kept less than the aperture through which the radiation passes, to concentrate the solar flux. These collectors require tracking to follow the sun because of optical system. The tracking rate depends on the degree of concentration ratio and needs frequent adjustment for system having high concentration ratio. The efficiency of these collectors lies between 50-70%. The collectors need more maintenance than FPC because of its optical system. The concentrating collectors are classified on the basis of reflector used; concentration ratio and tracking method adopted.

FPC with Reflectors

The mirrors are placed as reflecting surface to concentrate more radiations on FPC absorber. The fluid temperature is higher by 30°C than achieved in FPC. These collections utilize direct and diffuse radiation.

Lens Focusing Type

The fresnel lenses are used to concentrate the radiation at its focus. The lower side of lenses is grooved so that radiation concentrates on a focus line.

Compound Parabolic Collectors

These collectors are line focusing type. The compound parabolic collectors have two parabolic surfaces to concentrate the solar radiation to the absorber placed at bottom.

These collectors have high concentration ratio and concentrator is moving to track the sun.

Cylindrical Parabolic Collectors

The troughs concentrate sunlight onto a receiver tube, placed along the focal line of the trough. The temperature at the absorber tube is obtained at nearly 400° C. The absorber in these collectors is moving to receive the reflected radiations by reflector, while the concentrators (trough) remains fixed. Because of its parabolic shape, it can focus the sun at 30 to 100 times its normal intensity (concentration ratio) on a receiver. The heat transfer medium carries the heat at one central place for further utilization.

Parabolic Dish Collector

The collectors have mirror-like reflectors and an absorber at the focal point. These collectors are point focusing type. The concentrating ratio of these collectors is 100 and temperature of the receiver can reach up to 2000° C. These collectors have higher efficiency for converting solar energy to electricity in the small-power plant. In some systems, a heat engine, such as a Stirling engine, is connected to the receiver to generate electricity.

Center Receiver Type (Solar Power Tower)

These collectors are used to collect the large solar energy at one point. This system uses 100-10000 of flat tracking mirror scaled heliostats to reflect the solar energy to central receiver mounted on tower. The energy can be concentrated as much as 1,500 times than that of the energy coming in, from the sun. The losses of energy from the system are minimized as solar energy is being directly transferred by reflection from the heliostats to a single receiver where the sun's rays heat a fluid to produce steam.

Advantages of concentrating collector over flat collector

- The size of the absorber can be reduced that gives high concentration ratio.
- Thermal losses are less than FPC. However small losses occur in the concentrating collector because of its optical system as well as by reflection, absorption by mirrors and lenses.
- The efficiency increases at high temperatures.
- In these collectors the area intercepting the solar radiation is greater than the absorber area.
- These collectors are used for high-temperature applications.
- Reflectors can cost less per unit area than flat plate collectors.

• Focusing or concentrating systems can be used for electric power generation when not used for heating or cooling

• Little or no anti freeze is required to protect the absorber in a concentrator system whereas the entire solar energy collection surface requires anti freeze protection in a flat plate collector

Disadvantages

• Out of the beam and diffuse solar radiation components, only beam component is collected in case of focusing collectors because diffuse component cannot be reflected and is thus lost.

• In some stationary reflecting systems it is necessary to have a small absorber to track the sun image; in others the reflector may have to be adjustable more than one position if year round operation is desired; in other words costly orienting systems have to be used to track the sun.

• Additional requirements of maintenance particular to retain the quality of reflecting surface against dirt, weather, oxidation etc.

• Non –uniform flux on the absorber whereas flux in flat-plate collectors in uniform.

• Additional optical losses such as reflectance loss and the intercept loss, so they introduce additional factors in energy balances.

• High initial cost.

Solar Air Heaters

Air stream is heated by the back side of the collector plate in flat plate collector. Fins attached to the plate increase the contact surface. The back side of the collector is heavily insulated with mineral wool or some other material. If the size of collector is large, a blower is used to draw air into the collector and transmit the hot air to dryer.

The most favorable orientation of a collector for heating only is facing due south at an inclination angle to the horizontal equal to the latitude plus 150. The use of air as the heat transport fluid eliminates both freezing and corrosion problems and small air leaks are of less concern than water leaks

Disadvantages:

1. Need of handling larger volumes of air than liquids due to low density of air as working substance.

2. Thermal capacity of the air is low.

3. They have relatively high fluid circulation costs (especially if the rock heat storage unit is not carefully designed)

4. They have relatively large volumes of storage (roughly three times as much volume as for water heat-storage)

5. They have a higher noise level.

6. The system has difficulty of adding conventional absorption air-conditioners to air systems

7. The space is required for ducting.

Types of Air Heaters

1. Non porous absorber in which air stream does not flow through the absorber plate

2. Porous absorber that includes slit and expanded material, transpired honey comb and over lapped glass plate

1. Non-porous absorber plate type collectors: A non-porous absorber may be cooled by the air stream flowing over both sides of the plate. In most of the designs, the air flows behind the absorbing surface. Air flow above the upper surface increases the convection losses from the cover plate and therefore is not recommended if the air inlet temperature rise at the collector are large.

Transmission of the solar radiation through the transparent cover system and its absorption is identical to that of a liquid type flat-plate collector. To improve collection efficiency selective coating may beapplied provided there is no much cost.

Due to low heat transfer rates, efficiencies are lower than liquid solar heaters under the same radiation intensity and temperature conditions. Performance of air heaters is improved by:

(a) Roughening the rear of the plate to promote turbulence and improve the convective heat transfer coefficient

(b) Adding fins to increase heat transfer surface. Usually turbulence is also increased which enhances the convective heat transfer. Absorption of solar radiation is improved due to surface radioactive characteristics and the geometry of the corrugations, which help in trapping the reflected radiation.

2. Collectors with porous absorbers: The main drawback of the non-porous absorber plate is the necessity of absorbing all incoming radiation over the projected area from a thin layer over the surface, which is in the order of a few microns. Unless selective coatings are used, radiative losses from the absorber plate are excessive, therefore, the collection

efficiency cannot be improved. Too many surfaces and too much restriction to air flow will require a larger fan and a larger amount of energy to push the air through. The energy required for this cancels out saving from using solar energy, particularly if fan is electrical and if the amount of energy which is burned at the power plant to produce the electrical energy is included.

The solar air heating utilizing a transpired honey comb is also favorable since the flow cross section is much higher. Crushed glass layers can be used to absorb solar radiation and heat the air. A porous bed with layers of broken bottles can be readily used for agricultural drying purposes with minimum expenditure. The overlapped glass plate air heater can be considered as a form of porous matrix, although overall flow direction is along the absorber plates instead of being across the matrix.

Applications of Solar air heaters

• Heating buildings.

• Drying agricultural produce and lumber.

• Heating green houses.

• Air conditioning building sutilizing desiccant beds or a absorption refrigeration process.

• Heat sources for a heat engine such as a Brayton or Stirling cycle.

Flat plate collector:

Flat plate collector absorbs both beam and diffuse components of radiant energy. The absorber plate is a specially treated blackened metal surface. Sun rays striking the absorber plate are absorbed causing rise of temperature of transport fluid. Thermal insulation behind the absorber plate and transparent cover sheets (glass or plastic) prevent loss of heat to surroundings.

Applications of flat plate collector:

1. Solar water heating systems for residence, hotels, industry.

2. Desalination plant for obtaining drinking water from sea water.

3. Solar cookers for domestic cooking.

4. Drying applications.

5. Residence heating.

Losses in flat plate collector:

1. *Shadow effect*: Shadows of some of the neighbor panel fall on the surface ofthe collector where

the angle of elevation of the sun is less than 15^{o}(sun-rise and sunset).

Shadow factor = $\frac{surface\ of\ the\ collector\ recieving\ light}{Total\ surface\ of\ the\ collector}$

Shadow factor is less than 0.1 during morning and evening. The effective hours of solar collectors

are between 9AM and 5PM.

2. *Cosine loss factor:* For maximum power collection, the surface of collector should receive the

sun rays perpendicularly. If the angle between the perpendicular to the collector surface and the direction of sun rays is θ, then the area of solar beam intercepted by the collector surface is proportional to cosθ.

3. *Reflective loss factor:* The collector glass surface and the reflector surface collect dust, dirt, moisture etc. The reflector surface gets rusted, deformed and loses the shine. Hence, the efficiency of the collector is reduced significantly with passage of time.

Maintenance of flat plate collector:

1. Daily cleaning

2. Seasonal maintenance (cleaning, touch-up paint)

3. Yearly overhaul (change of seals, cleaning after dismantling)

Parabolic trough collector:

Parabolic trough with line focusing reflecting surface provides concentration ratios from 30 to 50. Hence, temperature as high as 300°C can be attained. Light is focused on a central line of the parabolic trough. The pipe located along the centre line absorbs the heat and the working fluid is circulated trough the pipe.

Paraboloid dish collectors:

The beam radiation is reflected by paraboloid dish surface. The point focus is obtained with CR (above 1000) and temperatures around 1000°C.

Based on the temperature:

- Low temperature collector
- Medium temperature collector
- High temperature collector

Low temperature collector:

Low-temperature collectors[edit]
Main article: Solar thermal collector

Glazed solar collectors are designed primarily for space heating. They re-circulate building air through a solar air panel where the air is heated and then directed back into the building. These solar space heating systems require at least two penetrations into the building and only perform when the air in the solar collector is warmer than the building room temperature. Most glazed collectors are used in the residential sector.

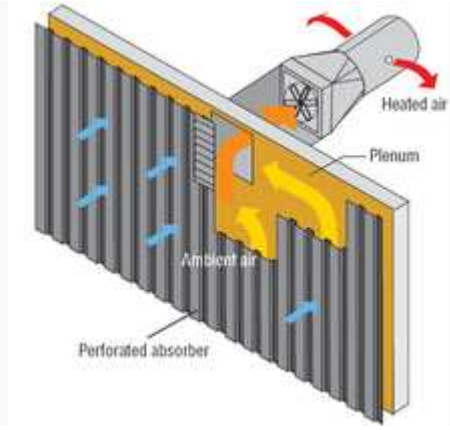

Unglazed, "transpired" air collector

Unglazed solar collectors are primarily used to pre-heat make-up ventilation air in commercial, industrial and institutional buildings with a high ventilation load. They turn building walls or sections of walls into low cost, high performance, unglazed solar collectors. Heat conducts from the absorber surface to the thermal boundary layer of air 1 mm thick on the outside of the absorber and to air that passes behind the absorber. The boundary layer of air is drawn into a nearby perforation before the heat can escape by convection to the outside air. The heated air is then drawn from behind the absorber plate into the building's ventilation system.

A Trombe wall is a passive solar heating and ventilation system consisting of an air channel sandwiched between a window and a sun-facing thermal mass. During the ventilation cycle, sunlight stores heat in the thermal mass and warms the air channel causing circulation through vents at the top and bottom of the wall. During the heating cycle the Trombe wall radiates stored heat.

Solar roof ponds are unique solar heating and cooling systems developed by Harold Hay in the 1960s. A basic system consists of a roof-mounted water bladder with a movable insulating cover. This system can control heat exchange between interior and exterior environments by covering and uncovering the bladder between night and day. When heating is a concern the bladder is uncovered during the day allowing sunlight to warm the water bladder and store heat for evening use. When cooling is a concern the covered bladder draws heat from the building's interior during the day and is uncovered at night to radiate heat to the cooler atmosphere.

Solar space heating with solar air heat collectors is more popular in the USA and Canada than heating with solar liquid collectors since most buildings already have a ventilation system for heating and cooling. The two main types of solar air panels are glazed and unglazed.

Medium temperature collector:

Solar drying

Solar thermal energy can be useful for drying wood for construction and wood fuels such as wood chips for combustion. Solar is also used for food products such as fruits, grains, and fish. Crop drying by solar means is environmentally friendly as well as cost effective while improving the quality. The less money it takes to make a product, the less it can be sold for, pleasing both the buyers and the sellers. Technologies in solar drying include ultra low cost pumped transpired plate air collectors based on black fabrics. Solar thermal energy is helpful in the process of drying products such as wood chips and other forms of biomass by raising the temperature while allowing air to pass through and get rid of the moisture.

Cooking

Solar cookers use sunlight for cooking, drying and pasteurization. Solar cooking offsets fuel costs, reduces demand for fuel or firewood, and improves air quality by reducing or removing a source of smoke. The simplest type of solar cooker is the box cooker first

built by Horace de Saussure in 1767. A basic box cooker consists of an insulated container with a transparent lid. These cookers can be used effectively with partially overcast skies and will typically reach temperatures of 50–100 °C. Concentrating solar cookers use reflectors to concentrate solar energy onto a cooking container. The most common reflector geometries are flat plate, disc and parabolic trough type. These designs cook faster and at higher temperatures (up to 350 °C) but require direct light to function properly. The Solar Kitchen in Auroville, India uses a unique concentrating technology known as the solar bowl. Contrary to conventional tracking reflector/fixed receiver systems, the solar bowl uses a fixed spherical reflector with a receiver which tracks the focus of light as the Sun moves across the sky. The solar bowl's receiver reaches temperature of 150 °C that is used to produce steam that helps cook 2,000 daily meals.

High temperature collector

Where temperatures below about 95 °C are sufficient, as for space heating, flat-plate collectors of the non-concentrating type are generally used. Because of the relatively high heat losses through the glazing, flat plate collectors will not reach temperatures much above 200 °C even when the heat transfer fluid is stagnant. Such temperatures are too low for efficient conversion to electricity.

The efficiency of heat engines increases with the temperature of the heat source. To achieve this in solar thermal energy plants, solar radiation is concentrated by mirrors or lenses to obtain higher temperatures – a technique called Concentrated Solar Power (CSP). The practical effect of HIGH EFFICIENCIES is to reduce the plant's collector size and total land use per unit power generated, reducing the environmental impacts of a power plant as well as its expense.

As the temperature increases, different forms of conversion become practical. Up to 600 °C, steam turbines, standard technology, have an efficiency up to 41%. Above 600 °C, gas turbines can be more efficient. Higher temperatures are problematic because different materials and techniques are needed. One proposal for very high temperatures is to use liquid fluoride salts operating between 700 °C to 800 °C, using multi-stage turbine systems to achieve 50% or more thermal efficiencies.[25] The higher operating temperatures permit the plant to use higher-temperature dry heat exchangers for its thermal exhaust, reducing the plant's water use – critical in the deserts where large solar plants are practical. High temperatures also make heat storage more efficient, because more watt-hours are stored per unit of fluid.

Commercial concentrating solar thermal power (CSP) plants were first developed in the 1980s. The world's largest solar thermal power plants are now the 370 MW Ivanpah Solar Power Facility, commissioned in 2014, and the 354 MW SEGS CSP installation both located in the Mojave Desert of California, where several other solar projects have been realized as well. With the exception of the Shams solar power station, built in 2013 near Abu Dhabi, the United Arab Emirates, all other 100 MW or larger CSP plants are either located in the United States or in Spain.

The principal advantage of CSP is the ability to efficiently add thermal storage, allowing the dispatching of electricity over up to a 24-hour period. Since peak electricity demand typically occurs at about 5 pm, many CSP power plants use 3 to 5 hours of thermal

storage.[26] With current technology, storage of heat is much cheaper and more efficient than storage of electricity. In this way, the CSP plant can produce electricity day and night. If the CSP site has predictable solar radiation, then the CSP plant becomes a reliable power plant. Reliability can further be improved by installing a back-up combustion system. The back-up system can use most of the CSP plant, which decreases the cost of the back-up system.

CSP facilities utilize high electrical conductivity materials, such as copper, in field power cables, grounding networks, and motors for tracking and pumping fluids, as well as in the main generator and high voltage transformers.

With reliability, unused desert, no pollution, and no fuel costs, the obstacles for large deployment for CSP are cost, aesthetics, land use and similar factors for the necessary connecting high tension lines. Although only a small percentage of the desert is necessary to meet global electricity demand, still a large area must be covered with mirrors or lenses to obtain a significant amount of energy. An important way to decrease cost is the use of a SIMPLE design.

When considering land use impacts associated with the exploration and extraction through to transportation and conversion of fossil fuels, which are used for most of our electrical power, utility-scale solar power compares as one of the most land-efficient energy resources available.

System designs

During the day the sun has different positions. For low concentration systems (and low temperatures) tracking can be avoided (or limited to a few positions per year) if non-imaging optics are used. For higher concentrations, however, if the mirrors or lenses do not move, then the focus of the mirrors or lenses changes (but also in these cases non-imaging optics provides the widest acceptance angles for a given concentration). Therefore it seems unavoidable that there needs to be a tracking system that follows the position of the sun (for solar photovoltaic a solar tracker is only optional). The tracking system increases the cost and complexity. With this in mind, different designs can be distinguished in how they concentrate the light and track the position of the sun.

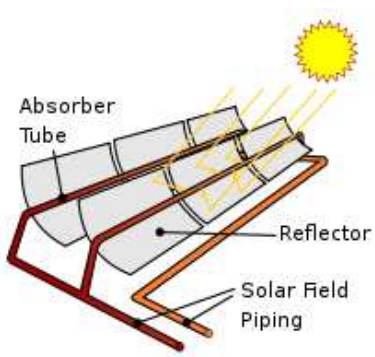

Parabolic trough designs

Parabolic trough power plants use a curved, mirrored trough which reflects the direct solar radiation onto a glass tube containing a fluid (also called a receiver, absorber or collector) running the length of the trough, positioned at the focal point of the reflectors. The trough is parabolic along one axis and linear in the orthogonal axis. For change of the daily position of the sun perpendicular to the receiver, the trough tilts east to west so that the direct radiation remains focused on the receiver. However, seasonal changes in the in angle of sunlight parallel to the trough does not require adjustment of the mirrors, since the light is simply concentrated elsewhere on the receiver. Thus the trough design does not require tracking on a second axis. The receiver may be enclosed in a glass vacuum chamber. The vacuum significantly reduces convective heat loss.

A fluid (also called heat transfer fluid) passes through the receiver and becomes very hot. Common fluids are synthetic oil, molten salt and pressurized steam. The fluid containing the heat is transported to a heat engine where about a third of the heat is converted to electricity.

Full-scale parabolic trough systems consist of many such troughs laid out in parallel over a large area of land. Since 1985 a solar thermal system using this principle has been in full operation in California in the United States. It is called the Solar Energy Generating Systems(SEGS) system.[29] Other CSP designs lack this kind of long experience and therefore it can currently be said that the parabolic trough design is the most thoroughly proven CSP technology.

Power tower designs

Power towers (also known as 'central tower' power plants or 'heliostat' power plants) capture and focus the sun's thermal energy with thousands of tracking mirrors (called heliostats) in roughly a two square mile field. A tower resides in the centre of the heliostat field. The heliostats focus concentrated sunlight on a receiver which sits on top of the tower. Within the receiver the concentrated sunlight heats molten salt to over 1,000°F (538°C). The heated molten salt then flows into a thermal storage tank where it is stored, maintaining 98% thermal efficiency, and eventually pumped to a steam generator. The steam drives a standard turbine to generate electricity. This process, also known as the "Rankine cycle" is similar to a standard coal-fired power plant, except it is fueled by clean and free solar energy.

The advantage of this design above the parabolic trough design is the higher temperature. Thermal energy at higher temperatures can be converted to electricity more efficiently and can be more cheaply stored for later use. Furthermore, there is less need to flatten the ground area. In principle a power tower can be built on the side of a hill. Mirrors can be flat and plumbing is concentrated in the tower. The disadvantage is that each mirror must have its own dual-axis control, while in the parabolic trough design single axis tracking can be shared for a large array of mirrors.

Dish designs

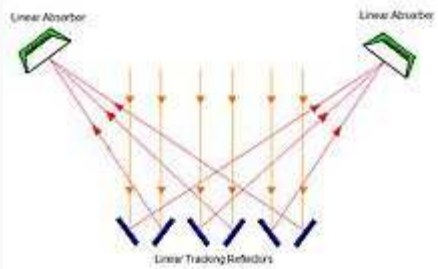

A parabolic solar dish concentrating the sun's rays on the heating element of a Stirling engine.

Fresnel reflector

CSP-Stirling is known to have the highest efficiency of all solar technologies around 30% compared to solar PV approximately 15%, and is predicted to be able to produce the cheapest energy among all renewable energy sources in high scale production and hot areas, semi deserts etc. A dish Stirling system uses a large, reflective, parabolic dish (similar in shape to satellite television dish). It focuses all the sunlight that strikes the dish up onto a single point above the dish, where a receiver captures the heat and transforms it into a useful form. Typically the dish is coupled with a Stirling engine in a Dish-Stirling System, but also sometimes a steam engine is used. These create rotational kinetic energy that can be converted to electricity using an electric generator.

Fresnel technologies

A linear Fresnel reflector power plant uses a series of long, narrow, shallow-curvature (or even flat) mirrors to focus light onto one or more linear receivers positioned above the mirrors. On top of the receiver a small parabolic mirror can be attached for further focusing the light. These systems aim to offer lower overall costs by sharing a receiver between several mirrors (as compared with trough and dish concepts), while still using the simple line-focus geometry with one axis for tracking. This is similar to the trough design (and different from central towers and dishes with dual-axis). The receiver is stationary and so fluid couplings are not required (as in troughs and dishes). The mirrors also do not need to support the receiver, so they are structurally simpler. When suitable aiming strategies are used (mirrors aimed at different receivers at different times of day), this can allow a denser packing of mirrors on available land area.

Rival single axis tracking technologies include the relatively new linear Fresnel reflector (LFR) and compact-LFR (CLFR) technologies. The LFR differs from that of the parabolic trough in that the absorber is fixed in space above the mirror field. Also, the reflector is composed of many low row segments, which focus collectively on an elevated long tower receiver running parallel to the reflector rotational axis.

Prototypes of Fresnel lens concentrators have been produced for the collection of thermal energy by International Automated Systems. No full-scale thermal systems using Fresnel lenses are known to be in operation, although products incorporating Fresnel lenses in conjunction with photovoltaic cells are already available.[41]

Micro-CSP

Micro-CSP is used for community-sized power plants (1 MW to 50 MW), for industrial, agricultural and manufacturing 'process heat' applications, and when large amounts of hot water are needed, such as resort swimming pools, water parks, large laundry facilities, sterilization, distillation and other such uses.

Enclosed parabolic trough

The enclosed parabolic trough solar thermal system encapsulates the components within an off-the-shelf greenhouse type of glasshouse. The glasshouse protects the components from the elements that can negatively impact system reliability and efficiency. This protection importantly includes nightly glass-roof washing with optimized water-efficient off-the-shelf automated washing systems.[42] Lightweight curved solar-reflecting mirrors

are suspended from the ceiling of the glasshouse by wires. A single-axis tracking system positions the mirrors to retrieve the optimal amount of sunlight. The mirrors concentrate the sunlight and focus it on a network of stationary steel pipes, also suspended from the glasshouse structure.[43] Water is pumped through the pipes and boiled to generate steam when intense sun radiation is applied. The steam is available for process heat. Sheltering the mirrors from the wind allows them to achieve higher temperature rates and prevents dust from building up on the mirrors as a result from exposure to humidity.[42]

Heat collection and exchange:

More energy is contained in higher frequency light based upon the formula of $E = h\upsilon$, where h is the Planck constant and v is frequency. Metal collectors down convert higher frequency light by producing a series of Compton shifts into an abundance of lower frequency light. Glass or ceramic coatings with high transmission in the visible and UV and effective absorption in the IR (heat blocking) trap metal absorbed low frequency light from radiation loss. Convection insulation prevents mechanical losses transferred through gas. Once collected as heat, thermos containment efficiency improves significantly with increased size. Unlike Photovoltaic technologies that often degrade under concentrated light, Solar Thermal depends upon light concentration that requires a clear sky to reach suitable temperatures.

Heat in a solar thermal system is guided by five basic principles: heat gain; heat transfer; heat storage; heat transport; and heat insulation. Here, heat is the measure of the amount of thermal energy an object contains and is determined by the temperature, mass and specific heat of the object. Solar thermal power plants use heat exchangers that are designed for constant working conditions, to provide heat exchange. Copper heat exchangers are important in solar thermal heating and cooling systems because of copper's high thermal conductivity, resistance to atmospheric and water corrosion, sealing and joining by soldering, and mechanical strength. Copper is used both in receivers and in primary circuits (pipes and heat exchangers for water tanks) of solar thermal water systems.

Heat gain is the heat accumulated from the sun in the system. Solar thermal heat is trapped using the greenhouse effect; the greenhouse effect in this case is the ability of a reflective surface to transmit short wave radiation and reflect long wave radiation. Heat and infrared radiation (IR) are produced when short wave radiation light hits the absorber plate, which is then trapped inside the collector. Fluid, usually water, in the absorber tubes collect the trapped heat and transfer it to a heat storage vault.

Heat is transferred either by conduction or convection. When water is heated, kinetic energy is transferred by conduction to water molecules throughout the medium. These molecules spread their thermal energy by conduction and occupy more space than the cold slow moving molecules above them. The distribution of energy from the rising hot water to the sinking cold water contributes to the convection process. Heat is transferred from the absorber plates of the collector in the fluid by conduction. The collector fluid is circulated through the carrier pipes to the heat transfer vault. Inside the vault, heat is transferred throughout the medium through convection.

Heat storage enables solar thermal plants to produce electricity during hours without sunlight. Heat is transferred to a thermal storage medium in an insulated reservoir during hours with sunlight, and is withdrawn for power generation during hours lacking sunlight. Thermal storage mediums will be discussed in a heat storage section. Rate of heat transfer is related to the conductive and convection medium as well as the temperature differences. Bodies with large temperature differences transfer heat faster than bodies with lower temperature differences.

Heat transport refers to the activity in which heat from a solar collector is transported to the heat storage vault. Heat insulation is vital in both heat transport tubing as well as the storage vault. It prevents heat loss, which in turn relates to energy loss, or decrease in the efficiency of the system.

As solar power has low density (kW/m^2), therefore large area on the ground is covered by collectors. Flat plate collectors are used for low temperature applications. For achieving higher temperature of transport fluid, the sun rays must be concentrated and focused.

Concentration Ratio (CR):

$$CR = \frac{\text{solar radiation surfaces(kW/m}^2)}{\text{solar radiation at focus on surfaces of collector(kW/m}^2)}$$

CR = For flat plate collectors, CR = 1. Using heliostats with sun-tracking in two planes, we obtain CR of the order of 1000. CR up to 100 can be achieved by using parabolic trough collectors with sun tracking in one plane.

The performance of a collector is evaluated in terms of its collector efficiency which is given as constant solar radiation (kW/m^2), the collector efficiency decreases with the increasing difference between the collector temperature and the outside temperature.

PHOTO VOLTAIC TECHNOLOGY:

The Kyoto agreement on global reduction of greenhouse gas emissions has prompted renewed interest in renewable energy systems worldwide. Many renewable energy technologies today are well developed, reliable, and cost competitive with the conventional fuel generators. The cost of renewable energy technologies is on a falling trend and is expected to fall further as demand and production increases. There are many renewable energy sources such as biomass, solar, wind, mini-hydro, and tidal power. One of the advantages offered by renewable energy sources is their potential to provide sustainable electricity in areas not served by the conventional power grid.

The growing market for renewable energy technologies has resulted in a rapid growth in the need for power electronics. Most of the renewable energy technologies produce DC power, and hence power electronics and control equipment are required to convert the DC into AC power.

Inverters are used to convert DC to AC. There are two types of inverters: stand-alone and grid-connected. The two types have several similarities, but are different in terms of control functions.

A stand-alone inverter is used in off-grid applications with battery storage. With backup diesel generators (such as PV–diesel hybrid power systems), the inverters may have additional control functions such as operating in parallel with diesel generators and bidirectional operation (battery charging and inverting). Grid-interactive inverters must follow the voltage and frequency characteristics of the utility-generated power presented on the distribution line. For both types of inverters, the conversion efficiency is a very important consideration. Details of stand-alone and grid-connected inverters for PV and wind applications are discussed in this chapter.

The density of power radiated from the sun (referred to as the ‘‘solar energy constant’’) at the outer atmosphere is 1.373kW/m^2. Part of this energy is absorbed and scattered by the earth’s atmosphere. The final incident sunlight on earth’s surface has a peak density of 1kW/m^2 at noon in the tropics. The technology of photovoltaic

(PV) is essentially concerned with the conversion of this energy into usable electrical form. The basic element of a PV system is the solar cell.

Solar cells can convert the energy of sunlight directly into electricity. Consumer appliances used to provide services such as lighting, water pumping, refrigeration, telecommunications, and television can be run from photovoltaic electricity.

Solar cells rely on a quantum-mechanical process known as the ‘‘photovoltaic effect’’ to produce electricity. A typical solar cell consists of a p n junction formed in a semiconductor material similar to a diode. Figure 1 shows a schematic diagram of the cross section through a crystalline solar cell. It consists of a 0.2–0.3mm thick mono-crystalline or polycrystalline silicon wafer having two layers with different electrical properties formed by ‘‘doping’’ it with other impurities (e.g., boron and phosphorus). An electric field is established at the junction between the negatively doped (using phosphorus atoms) and the positively doped (using boron atoms) silicon layers. If light is incident on the solar cell, the energy from the light (photons) creates free charge carriers, which are separated by the electrical field. An electrical voltage is generated at the external contacts, so that current can flow when a load is connected. The photocurrent (I_{ph}), which is internally generated in the solar cell, is proportional to the radiation intensity.

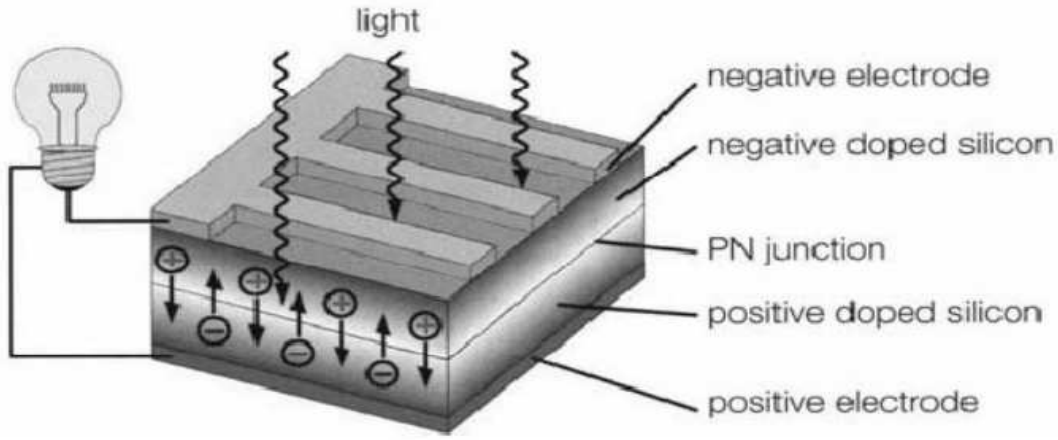

Figure 1: Solar Cell

A simplified equivalent circuit of a solar cell consists of a current source in parallel with a diode as shown in Fig. 2a. A variable resistor is connected to the solar cell generator as a load. When the terminals are short-circuited, the output voltage and also the voltage across the diode are both zero. The entire photocurrent (I_{ph}) generated by the solar radiation then flows to the output. The solar cell current has its maximum (I_{sc}). If the load resistance is increased, which results in an increasing voltage across the p n junction of the diode, a portion of the current flows through the diode and the output current decreases by the same amount. When the load resistor is open circuited, the output current is zero and the entire photocurrent flows through the diode. The relationship between current and voltage may be determined from the diode characteristic equation:

$$I = I_{ph} - I_0(e^{\frac{qv}{kt}} - 1) = I_{ph} - I_d$$

where q is the electron charge, k is the Boltzmann constant, I_{ph} is photocurrent, I_0 is the reverse saturation current, Id is diode current, and T is the solar cell operating temperature (K). The current versus voltage (I-V) of a solar cell is thus equivalent to an ''inverted'' diode

characteristic curve shown in Fig.2.

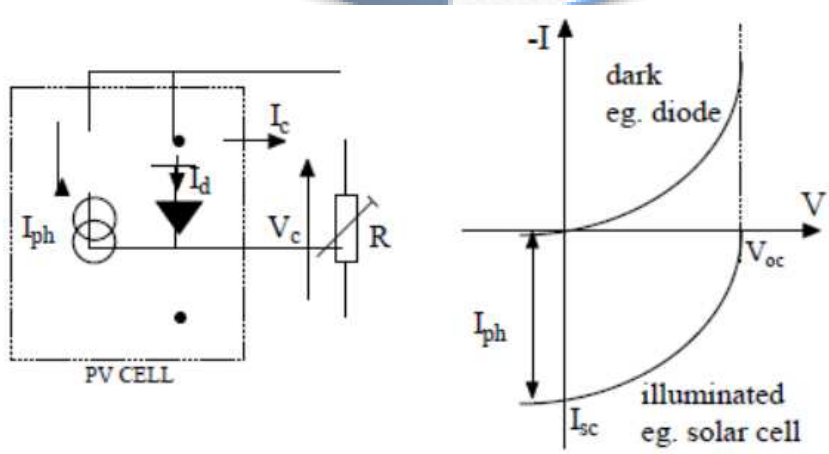

Figure 2: Equivalent circuit of a solar cell

A number of semiconductor materials are suitable for the manufacture of solar cells. The most common types using silicon semiconductor material (Si) are:

- Monocrystalline Si cells
- Polycrystalline Si cells
- Amorphous Si cells

A solar cell can be operated at any point along its characteristic current–voltage curve, as shown in Fig. 3. Two important points on this curve are the open circuit voltage (V_{oc}) and short-circuit current (I_{sc}). The open-circuit voltage is the maximum voltage at zero current, whereas the short circuit current is the maximum current at zero voltage. For a silicon solar cell under standard test conditions, V_{oc} is typically 0.6–0.7 V, and I_{sc} is typically 20–40mA for every square centimeter of the cell area. To a good approximation, I_{sc} is proportional to the illumination level, whereas V_{oc} is proportional to the logarithm of the illumination level.

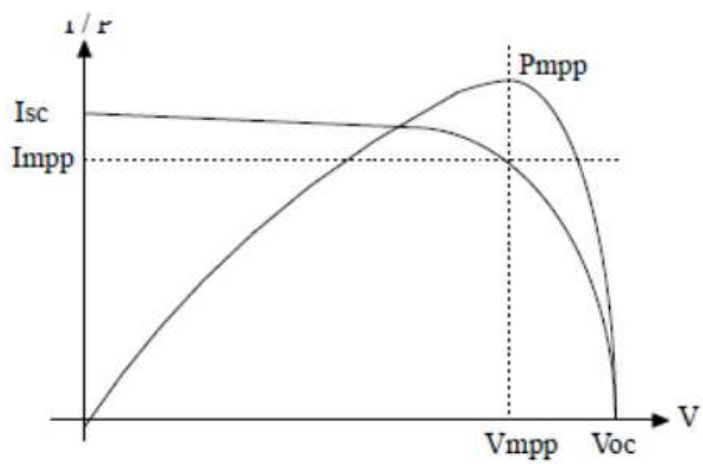

Figure 3: I vs. V characteristics of a solar cell

A plot of power (P) against voltage (V) for this device (Fig. 3) shows that there is a unique point on the I-V curve at which the solar cell will generate maximum power. This is known as the maximum power point (V_{mp}, I_{mp}). To maximize the power output, steps are usually taken during fabrication to maximize the three basic

cell parameters: open-circuit voltage, short-circuit current, and fill factor (FF)—a term describing how ‘‘square’’ the I-V curve is, given by

$$Fill\ Factor = \frac{V_{mp} I_{mp}}{V_{oc} I_{sc}}$$

For a silicon solar cell, FF is typically 0.6–0.8.

Because silicon solar cells typically produce only about 0.5 V, a number of cells are connected in series in a PV module. A panel is a collection of modules physically and electrically grouped together on a support structure. An array is a collection of panels (see Fig. 4).

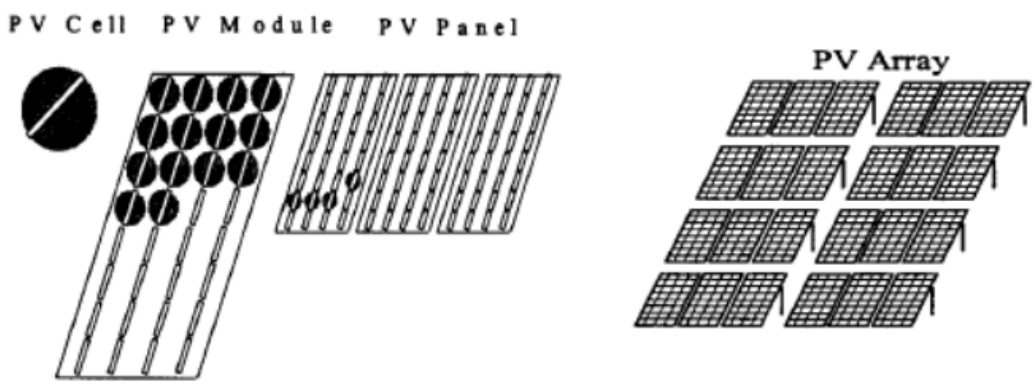

Figure 4: Elements of SPV system

The effect of temperature on the performance of a silicon solar module is illustrated in Fig. 6.5.

Note that I_{sc} slightly increases linearly with temperature, but V_{oc} and the maximum power P_m

decrease with temperature.

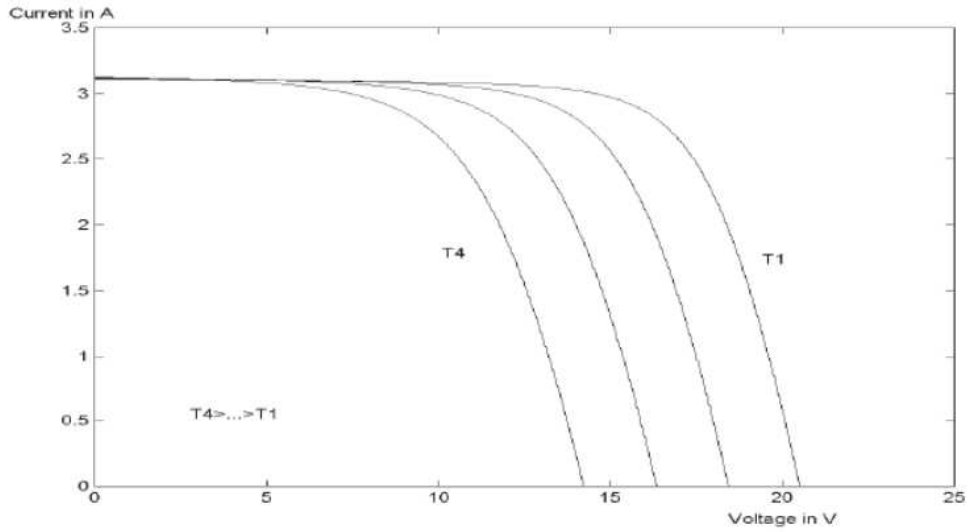

Figure 5: Effect of temperature on the performance of Silicon solar module

Figure 6 shows the variation of PV current and voltages at different insolation levels. From Figs. 5 and 6, it can be seen that the I V characteristics of solar cells at a given insolation and temperature consist of a constant-voltage segment and a constant-current segment. The current is limited, as the cell is short-circuited. The maximum power condition occurs at the knee of the characteristic where the two segments meet.

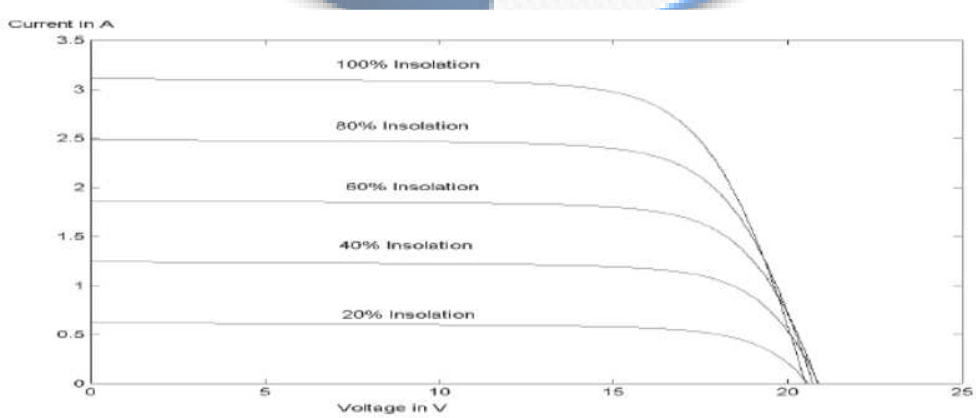

Figure 6: I-V characteristics for different insolation levels

ARRAY DESIGN

The major factors influencing the electrical design of the solar array are as follows:

• The sun intensity

• The sun angle

• The load matching for maximum power

• The operating temperature

These factors are discussed in the following subsections.

SUN INTENSITY:

The magnitude of the photocurrent is maximum under a full bright sun (1.0 sun). On a partially sunny day, the photocurrent diminishes in direct proportion to the sun intensity. At a lower sun intensity, the I-V characteristic shifts downward as shown above. On a cloudy day, therefore, the short-circuit current decreases significantly. The reduction in the open-circuit voltage, however, is small. The photo conversion efficiency of the cell is insensitive to the solar radiation in the practical working range. This means that the conversion efficiency is the same on a bright sunny day as on a cloudy day. We get a lower power output on a cloudy day only because of the lower solar energy impinging on the cell.

SUN ANGLE:

The cell output current is given by $I = I_o\cos\theta$, where I_o is the current with normal sun (reference), and θ is the angle of the sun line measured from the normal. This cosine law holds well for sun angles ranging from 0 to about 50°. Beyond 50°, the electrical output deviates significantly from the cosine law, and the cell generates no power beyond 85°, although the mathematical cosine law predicts 7.5% power generation.

SHADOW EFFECT:

The array may consist of many parallel strings of series-connected cells. Two such strings are shown in Figure 9.13. A large array may get partially shadowed due to a structure interfering with the sun line. If a cell in a long series string gets completely shadowed, it loses the photo-voltage but still must carry the string current by virtue of its being in series with all other cells operating in full sunlight. Without internally generated voltage, the shadowed cell cannot produce power. Instead, it acts as a load, producing local I^2R loss and heat. The remaining cells in the string must work at higher voltage to make up the loss of the shadowed cell voltage.

TEMPERATURE EFFECTS:

With increasing temperature, the short-circuit current of the cell increases, whereas the open-circuit voltage decreases. The effect of temperature on PV power is quantitatively evaluated by examining the effects on the current and the voltage separately.

EFFECT OF CLIMATE:

On a partly cloudy day, the PV module can produce up to 80% of its full sun power. It can produce about 30% power even with heavy clouds on an extremely overcast day. Snow does not usually collect on the module, because it is angled to catch the sun. If snow does collect, it quickly melts. Mechanically, the module is designed to withstand golf-ball-size hail.

ELECTRICAL LOAD MATCHING:

The operating point of any power system is the intersection of the source line and the load line. If the PV source having the I-V and P-V characteristics shown in

Figure is supplying power to a resistive load R_1, it will operate at point A_1.If the load resistance increases to R_2 or R_3, the operating point moves to A_2 or A_3, respectively. The maximum power is extracted from the module when the load resistance is R_2. Such a load

that matches with the source is always necessary for the maximum power extraction from a PV source.

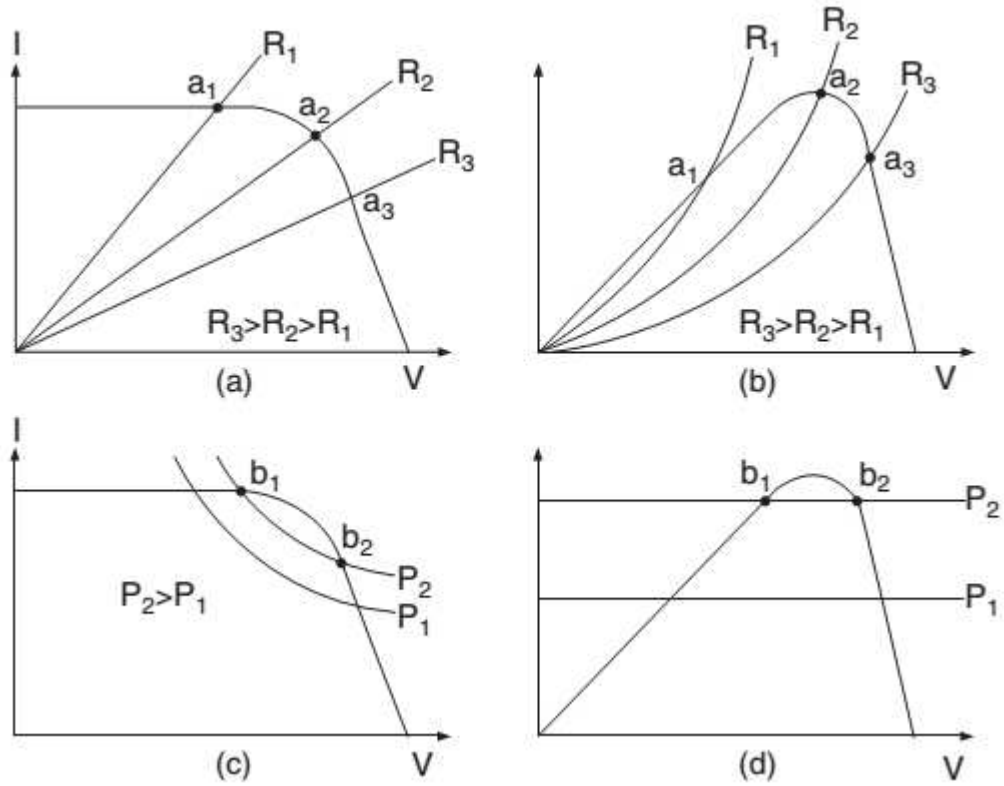

Operating stability and electrical load matching with constant-resistive load and constant-power load.

SUN TRACKING:

More energy is collected by the end of the day if the PV module is installed on a tracker with an actuator that follows the sun. There are two types of sun trackers:

• One-axis tracker, which follows the sun from east to west during the day.

• Two-axis tracker, which follows the sun from east to west during the day, and from north to south during the seasons of the year.

PEAK POWER OPERATION:

The sun tracker drives the module mechanically to face the sun to collect the maximum solar radiation. However, that in itself does not guarantee the maximum power output from the module. As was seen in Figure, the module must operate electrically at a certain voltage that corresponds to the peak power point under a given operating condition. First we examine the electrical principle of peak-power operation.

If the array is operating at any point at voltage V and current I on the I-V curve, the power generation is P = VI watts. If the operation moves away from the preceding point such that the current is now I + ΔI, and the voltage is V + ΔV, then the new power is as follows:

$$P + \Delta P = (V + \Delta V)(I + \Delta I) \qquad \text{(i)}$$

which, after ignoring a small term, simplifies to the following:

$$\Delta P = \Delta V \cdot I + \Delta I \cdot V \qquad \text{(ii)}$$

ΔP would be zero if the array were operating at the peak power point, which necessarily lies on a locally flat neighborhood. Therefore, at the peak power point, the preceding expression in the limit becomes:

$$\frac{dV}{dI} = -\frac{V}{I} \qquad \text{(iii)}$$

We note here that dV/dI is the dynamic impedance of the source, and V/I the static impedance. Thus, at the peak power point, the following relation holds:

$$\text{Dynamic impedance } Z_d = -\text{static impedance } Z_s \qquad \text{(iv)}$$

There are three electrical methods of extracting the peak power from a PV source, as described in the following text:

1. In the first method, a small signal current is periodically injected into the array bus, and the dynamic bus impedance (Z_d = dV/dI) and the static bus impedance (Z_s = V/I) are measured. The operating voltage is then increased or decreased until Z_d equals $-Z_s$. At this point, the maximum power is extracted from the source.
2. In another method, the operating voltage is increased as long as dP/dV is positive. That is, the voltage is increased as long as we get more power. If

dP/dV is sensed negative, the operating voltage is decreased. The voltage stays the same if dP/dV is near zero within a preset deadband.

3. The third method makes use of the fact that for most PV cells, the ratio of the voltage at the maximum power point to the open-circuit voltage (i.e., V_{mp}/V_{oc}) is approximately constant, say K. For example, for high quality crystalline silicon cells, K = 0.72. An unloaded cell is installed on the array and kept in the same environment as the power-producing cells, and its open-circuit voltage is continuously measured. The operating voltage of the power-producing array is then set at $K \cdot V_{oc}$, which will produce the maximum power.

SYSTEM COMPONENTS:

The array by itself does not constitute the PV power system. We may also need a structure to mount it, a sun tracker to point the array to the sun, various sensors to monitor system performance, and power electronic components that accept the DC power produced by the array, charge the battery, and condition the remaining power in a form that is usable by the load. If the load is AC, the system needs an inverter to convert the DC power into AC at 50 or 60 Hz.

Figure shows the necessary components of a stand-alone PV power system. The peak-power tracker senses the voltage and current outputs of the array and continuously adjusts the operating point to extract the maximum power under varying climatic conditions. The output of the array goes to the inverter, which converts the DC into AC. The array output in excess of the load requirement is used to charge the battery. The battery charger is usually a DC–DC buck converter. If excess power is still available after fully charging the battery, it is shunted in dump heaters, which may be a room or water heater in a stand-alone system. When the sun is not available, the battery discharges to the inverter to power the load. The battery discharge diode Db is to prevent the battery from being charged when the charger is opened after a full charge or for other reasons. The array diode Da is to isolate the array from the battery, thus keeping the array from acting as the load on the battery at night. The mode controller collects system signals, such as the array

and the battery currents and voltages, and keeps track of the battery state of charge by bookkeeping the charge/discharge ampere-hours. It uses this information to turn on or off the battery charger, discharge converter, and dump loads as needed. Thus, the mode controller is the central controller of the entire system.

In the grid-connected system, dump heaters are not required, as all excess power is always fed to the grid lines. The battery is also eliminated, except for a few small critical loads, such as the start-up controller and the computer. DC power is first converted into AC by the inverter, ripples are filtered, and only then is the filtered power fed into the grid lines.

In the PV system, the inverter is a critical component, which converts the array DC power into AC for supplying the loads or interfacing with the grid. A new product line recently introduced into the market is the AC PV module, which integrates an inverter directly into module design. It is presently available in a few hundred watts capacity. It provides utility-grade 60-Hz power directly from the module junction box. This greatly simplifies PV system design.

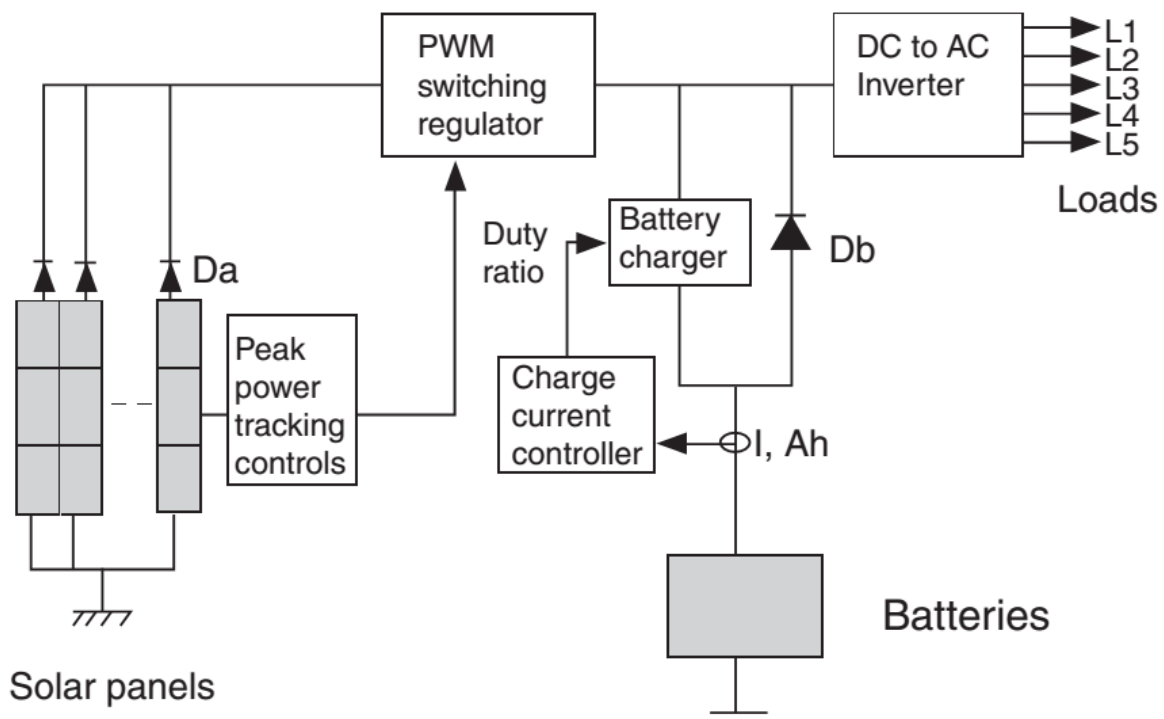

Peak-power-tracking PV power system showing major components

Types of PV Power Systems

Photovoltaic power systems can be classified as follows:

- Stand-alone
- Hybrid
- Grid connected

Stand-alone PV systems, shown in Fig. 7a, are used in remote areas with no access to a utility grid. Conventional power systems used in remote areas often based on manually controlled diesel generators operating continuously or for a few hours. Extended operation of diesel generators at low load levels significantly increases maintenance costs and reduces their useful life. Renewable energy sources such as PV can be added to remote area power systems using diesel and other fossil fuel powered generators to provide 24-hour power economically and efficiently. Such systems are called ‘‘hybrid energy systems.’’ Figure 7a shows a schematic of a PV–diesel hybrid system. In grid-connected PV systems, as shown in Fig.7c, PV panels are connected to a grid through inverters without battery storage. These systems can be classified as small systems, such as residential rooftop systems or large grid-connected systems. The grid interactive inverters must be synchronized with the grid in terms of voltage and frequency.

Stand-Alone PV Systems

The two main stand-alone PV applications are:

- Battery charging
- Solar water pumping

(a) Battery charging

Battery manufacturers specify the nominal number of complete charge and discharge cycles as a function of the depth-of-discharge (DOD), as shown in Fig. 23.8. Although this information can be used reliably to predict the lifetime of lead-acid batteries in conventional applications, such as uninterruptable power supplies or electric vehicles, it usually results in an overestimation of the useful life of the battery bank in renewable energy systems.

Two of the main factors that have been identified as limiting criteria for the cycle life of batteries in photovoltaic power systems are incomplete charging and prolonged operation at a low state of charge (SOC). The objective of improved battery control strategies is to extend the lifetime of lead-acid batteries to achieve the typical number of cycles shown in Fig. 8. If this is achieved, an optimum solution for the required storage capacity and the maximum depth-of-discharge of the battery can be found by referring to the manufacturer's information.

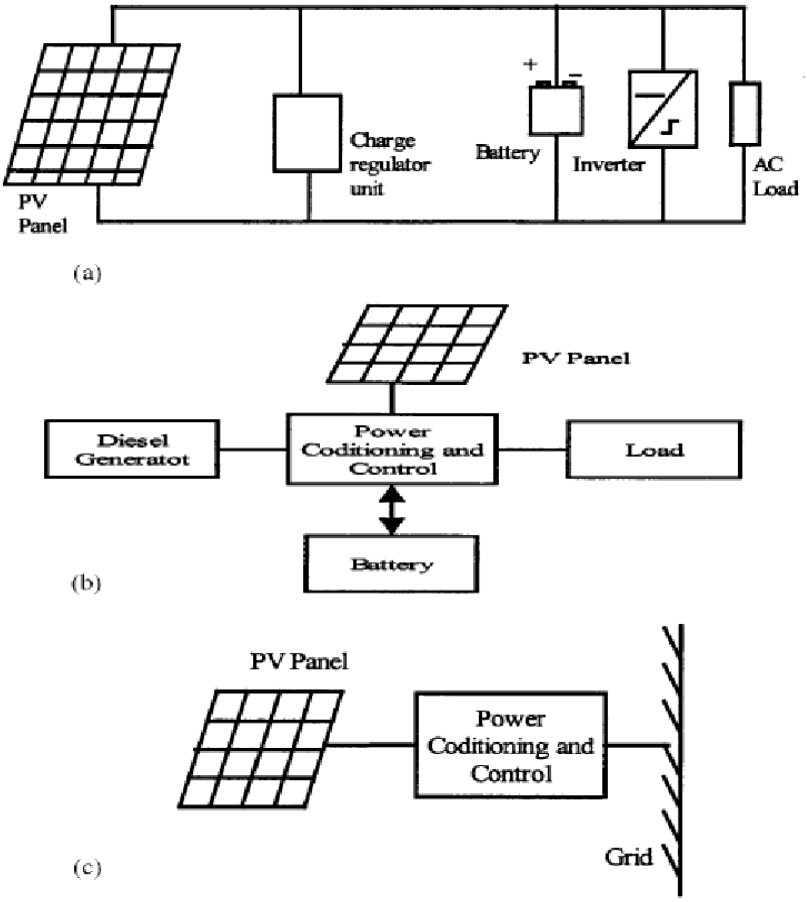

Figure 7: (a) Stand Alone PV system (b) PV-diesel hybrid system (c) Grid-connected PV system

Increasing the capacity will reduce the typical depth-of discharge and therefore prolong the battery lifetime. Conversely, it may be more economic to replace a smaller battery bank more frequently.

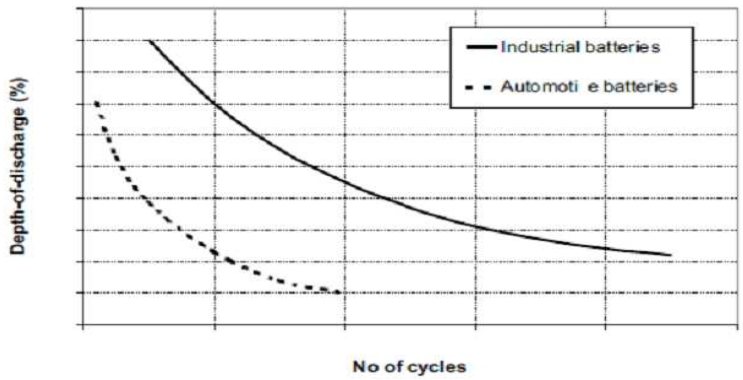

Figure 8: No. of battery cycles and Depth of discharge

(b) Solar Water Pumping:

In many remote and rural areas, hand pumps or diesel driven pumps are used for water supply. Diesel pumps consume fossil fuel, affect the environment, need more maintenance, and are less reliable. Photovoltaic (PV)-powered water pumps have received considerable attention because of major developments in the field of solar-cell materials and power electronic systems technology.

Two types of pumps are commonly used for water-pumping applications: Positive displacement and centrifugal. Both centrifugal and positive displacement pumps can be further classified into those with motors that are surface mounted, and those that are submerged into the water (‘‘submersible’’).

Displacement pumps have water output directly proportional to the speed of the pump, but almost independent of head. These pumps are used for solar water pumping from deep wells or bores. They may be piston-type pumps or use a diaphragm driven by a cam or rotary screw, or use a progressive cavity system. The pumping rate of these pumps is directly related to the speed, and hence constant torque is desired.

The typical PV stand-alone system consists of a solar array and a battery connected as shown in Figure. The PV array supplies power to the load and charges the battery when there is sunlight. The battery powers the load otherwise. An inverter converts the DC power of the array and the battery into 60 or 50 Hz power. Inverters are available in a

wide range of power ratings with efficiencies ranging from 85 to 95%. The array is segmented with isolation diodes for improving reliability. In such a design, if one string of the solar array fails, it does not load or short the remaining strings. Multiple inverters are preferred for reliability. For example, three inverters, each with a 35% rating, are preferred to one with a 105% rating. If one such inverter fails, the remaining two can continue supplying most loads until the failed one is repaired or replaced. The same design approach also extends to using multiple batteries.

Most stand-alone PV systems are installed in developing countries to provide basic necessities such as lighting and pumping water.

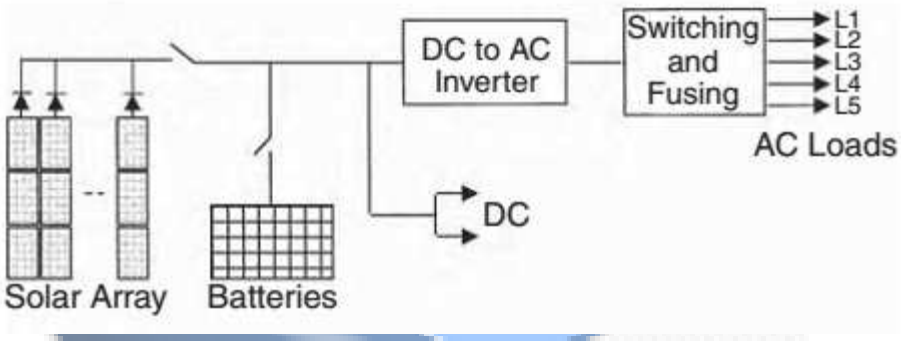

PV stand-alone power system with battery.

A traveling clinic uses photovoltaic electricity to keep vaccines refrigerated in the African desert area.

Photovoltaic (PV) power systems have made a successful transition from small stand-alone sites to large grid-connected systems. The utility interconnection brings a new dimension to the renewable power economy by pooling the temporal excess or the shortfall in the renewable power with the connecting grid that generates base-load power using conventional fuels. This improves the overall economy and load availability of the renewable plant site — the two important factors of any power system. The grid supplies power to the site loads when needed or absorbs the excess power from the site when available. A kilowatthour meter is used to measure the power delivered to the grid, and another is used to measure the power drawn from the grid. The two meters are generally priced differently on a daily basis or on a yearly basis that allows energy swapping and billing the net annual difference.

In the below figure is a typical circuit diagram of the grid-connected PV power system. It interfaces with the local utility lines at the output side of the inverter as shown. A battery is often added to meet short-term load peaks. In the U.S., the Environmental Protection Agency sponsors grid-connected PV programs in urban areas where wind towers would be impractical. In recent years, large building-integrated PV installations have made significant advances by adding grid connections to the system design. For example, Figure shows the building-integrated PV system on the roof of the Northeastern University Student Center in Boston. The project was part of the EPA PV DSP program. The system produces 18 kW power and is connected to the grid. In addition, it collects sufficient research data using numerous instruments and computer data loggers. The vital data are sampled every 10 sec, and are averaged and stored every 10 min. The incoming data includes information about air temperature and wind speed. The performance parameters include direct current (DC) voltage and current generated by the PV roof and the alternating current (AC) power at the inverter output side.

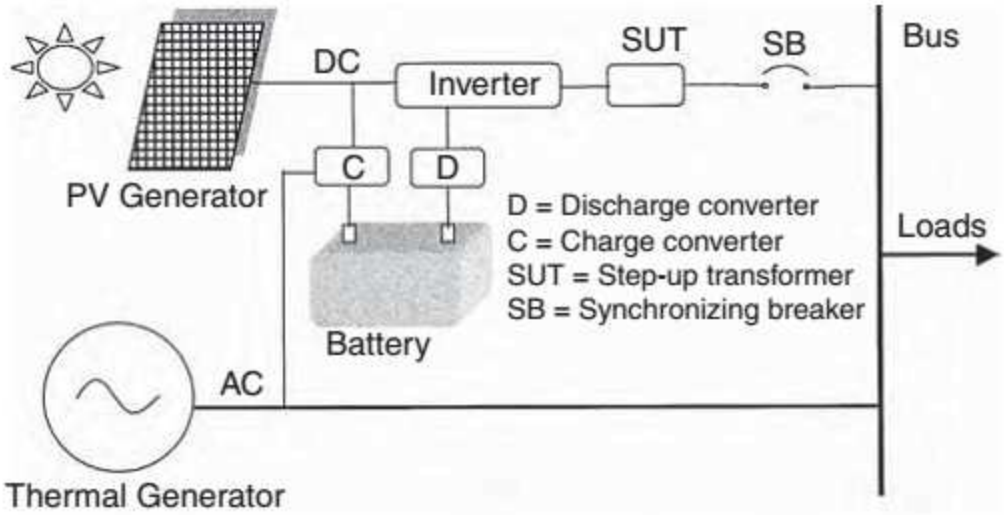

Electrical schematic of the grid-connected PV system

MODULE II

WIND ENERGY

Introduction:

The wind turbine captures the wind's kinetic energy in a rotor consisting of two or more blades mechanically coupled to an electrical generator. The turbine is mounted on a tall tower to enhance the energy capture. Numerous wind turbines are installed at one site to build a wind farm of the desired power generation capacity. Obviously, sites with steady high wind produce more energy over the year.

Two distinctly different configurations are available for turbine design, the horizontal-axis configuration (Figure 3.1) and the vertical-axis configuration. The horizontal-axis machine has been the standard in Denmark from the beginning of the wind power industry. Therefore, it is often called the Danish wind turbine. The vertical-axis machine has the shape of an egg beater and is often called the Darrieus rotor after its inventor. It has been used in the past because of its specific structural advantage. However, most modern wind turbines use a horizontal axis design. Except for the rotor, most other components are the same in both designs, with some differences in their placements.

2.1 SPEED AND POWER RELATIONS

The kinetic energy in air of mass m moving with speed V is given by the following in joules:

$$\text{kinetic energy} = \frac{1}{2} m V^2 \tag{1}$$

The power in moving air is the flow rate of kinetic energy per second in watts:

$$\text{power} = \frac{1}{2}(\text{mass flow per second}) V^2 \tag{2}$$

If

P= mechanical power in the moving air (watts),

ρ = air density (kg/m^3),

A= area swept by the rotor blades (m^2), and

V= velocity of the air (m/sec),

then the volumetric flow rate is AV, the mass flow rate of the air in kilograms per second is ρAV, and the mechanical power coming in the upstream wind is given by the following in watts:

$$P = \frac{1}{2}(\rho AV)V^2 = \frac{1}{2}\rho AV^3 \tag{3}$$

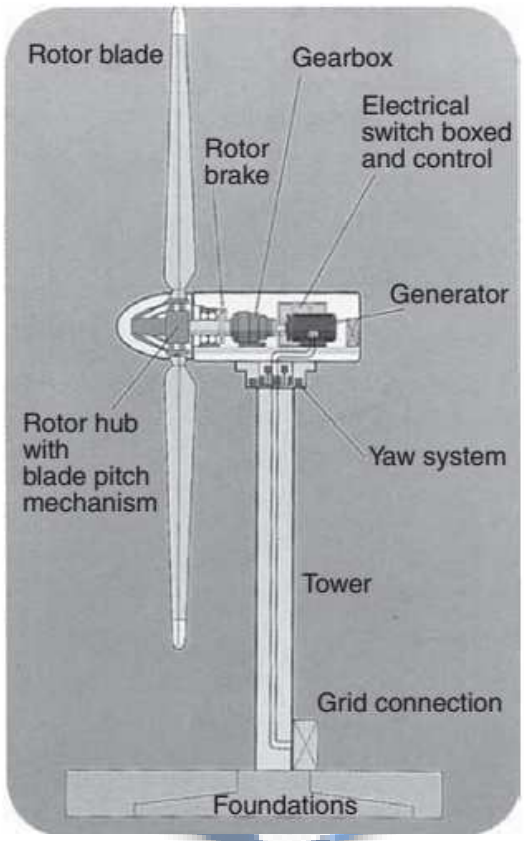

Horizontal-axis wind turbine showing major components.

Two potential wind sites are compared in terms of the specific wind power expressed in watts per square meter of area swept by the rotating blades. It is also referred to as the power density of the site, and is given by the following expression in watts per square meter of the rotor-swept area:

$$\text{specific power of the site} = \frac{1}{2}\rho V^3 \tag{4}$$

This is the power in the upstream wind. It varies linearly with the density of the air sweeping the blades and with the cube of the wind speed. The blades cannot extract all of the upstream wind power, as some power is left in the downstream air that continues to move with reduced speed.

2.2 POWER EXTRACTED FROM THE WIND

The actual power extracted by the rotor blades is the difference between the upstream and downstream wind powers. Using Equation 3.2, this is given by the following equation in units of watts:

$$P_o = \frac{1}{2}(\text{mass flow per second})\left\{V^2 - V_o^{\,2}\right\} \tag{5}$$

where

P_o= mechanical power extracted by the rotor, i.e., the turbine output power,

V= upstream wind velocity at the entrance of the rotor blades, and

V_o= downstream wind velocity at the exit of the rotor blades.

Let us leave the aerodynamics of the blades to the many excellent books available on the subject, and take a macroscopic view of the airflow around the blades. Macroscopically, the air velocity is discontinuous from V to V_o at the "plane" of the rotor blades, with an "average" of ½(V + V_o). Multiplying the air density by the average velocity, therefore, gives the mass flow rate of air through the rotating blades, which is as follows:

$$\text{mass flow rate} = \rho A \frac{V + V_o}{2} \tag{6}$$

The mechanical power extracted by the rotor, which drives the electrical generator, is therefore:

$$P_o = \frac{1}{2}\left[\rho A \frac{(V + V_o)}{2}\right](V^2 - V_o^2) \tag{7}$$

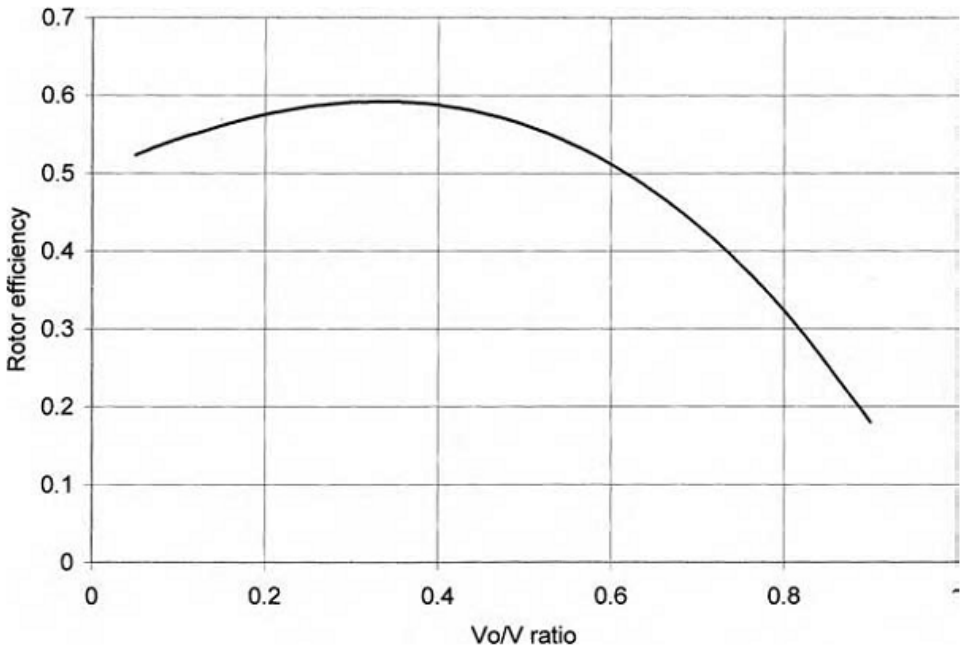

Rotor efficiency vs. V_o/V ratio has a single maximum.

The preceding expression is algebraically rearranged in the following form:

$$P_o = \frac{1}{2}\rho A V^3 \frac{\left(1+\frac{V_o}{V}\right)\left[1-\left(\frac{V_o}{V}\right)^2\right]}{2} \tag{8}$$

The power extracted by the blades is customarily expressed as a fraction of the upstream wind power in watts as follows:

$$P_o = \frac{1}{2}\rho A V^3 C_p \tag{9}$$

Where

$$C_p = \frac{\left(1+\frac{V_o}{V}\right)\left[1-\left(\frac{V_o}{V}\right)^2\right]}{2} \tag{10}$$

Comparing Equation 3 and Equation 9, we can say that C_p is the fraction of the upstream wind power that is extracted by the rotor blades and fed to the electrical generator. The remaining power is dissipated in the downstream wind. The factor C_p is called the power coefficient of the rotor or the rotor efficiency.

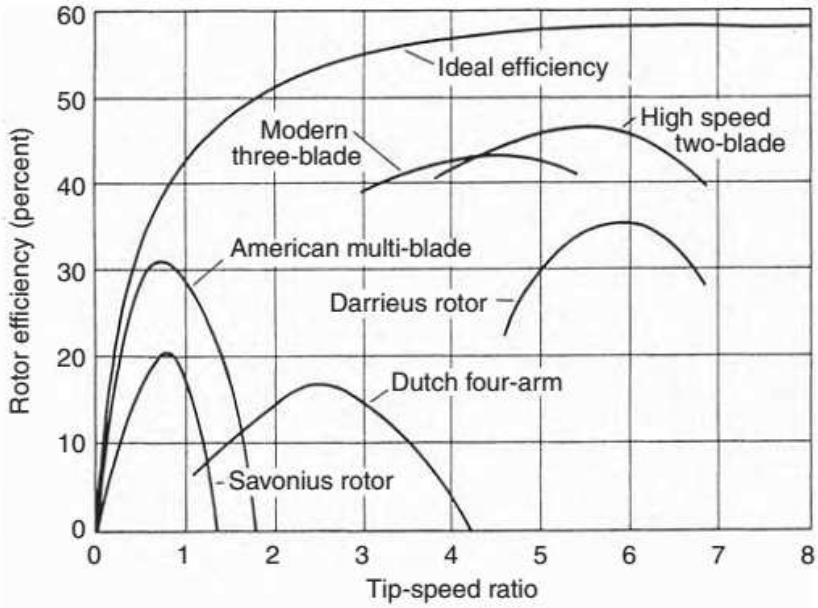

Rotor efficiency vs. V_o/V ratio for rotors with different numbers of blades.

2.3 WIND SPEED DISTRIBUTION

Having a cubic relation with power, wind speed is the most critical data needed to appraise the power potential of a candidate site. The wind is never steady at any site. It is influenced by the weather system, the local land terrain, and its height above the ground surface. Wind speed varies by the minute, hour, day, season, and even by the year. Therefore, the annual mean speed needs to be averaged over 10 yr or more. Such a long-term average gives a greater confidence in assessing the energy-capture potential of a site. However, long-term measurements are expensive and most projects cannot wait that long. In such situations, the short-term data, for example, over 1 yr, is compared with long-term data from a nearby site to predict the long-term annual wind speed at the site under consideration. This is known as the measure, correlate, and predict (mcp) technique.

Because wind is driven by the sun and the seasons, the wind pattern generally repeats over a period of 1 yr. The wind site is usually described by the speed data averaged over calendar months. Sometimes, the monthly data is aggregated over the year for brevity in reporting the overall "windiness" of various sites. Wind speed variations over the period can be described by a probability distribution function.

2.3.1 WEIBULL PROBABILITY DISTRIBUTION

The variation in wind speed is best described by the Weibull probability distribution function h with two parameters, the shape parameter k, and the scale parameter c. The probability of wind speed being v during any time interval is given by the following:

$$h(v) = \left(\frac{k}{c}\right)\left(\frac{v}{c}\right)^{(k-1)} e^{-\left(\frac{v}{c}\right)^{k}} \quad \text{for } 0 < v < \infty \tag{11}$$

In the probability distribution chart, h over a chosen time period is plotted against

v, where h is defined as follows:

$$h = \frac{\text{fraction of time wind speed is between } v \text{ and } (v + \Delta v)}{\Delta v} \tag{12}$$

By definition of the probability function, the probability that the wind speed will be between zero and infinity during the entire chosen time period is unity, i.e.:

$$\int_0^\infty h \mathrm{d}v = 1 \tag{13}$$

Because we often choose a time period of 1 yr, we express the probability function in terms of the number of hours in the year, such that:

$$h = \frac{\text{number of hours per year the wind is between } v \text{ and } (v + \Delta v)}{\Delta v} \tag{14}$$

The unit of h is hours per year per meter per second, and the integral (Equation 13) now becomes 8760 (the total number of hours in the year) instead of unity.

Figure is the plot of h vs. v for three different values of k in Equation 11. The curve on the left with k = 1 has a heavy bias to the left, where most days are windless (v = 0). The curve on the right with k = 3 looks more like a normal bell shaped distribution, where some days have high wind and an equal number of days have low wind. The curve in the middle with k = 2 is a typical wind speed distribution found at most sites. In this distribution, more days have speeds lower than the mean speed, whereas a few days have high wind. The value of k determines the shape ofthe curve and hence is called the shape parameter.

The Weibull distribution with k = 1 is called the exponential distribution, which is generally used in reliability studies. For k > 3, it approaches the normal distribution, often called the Gaussian or the bell-shaped distribution.

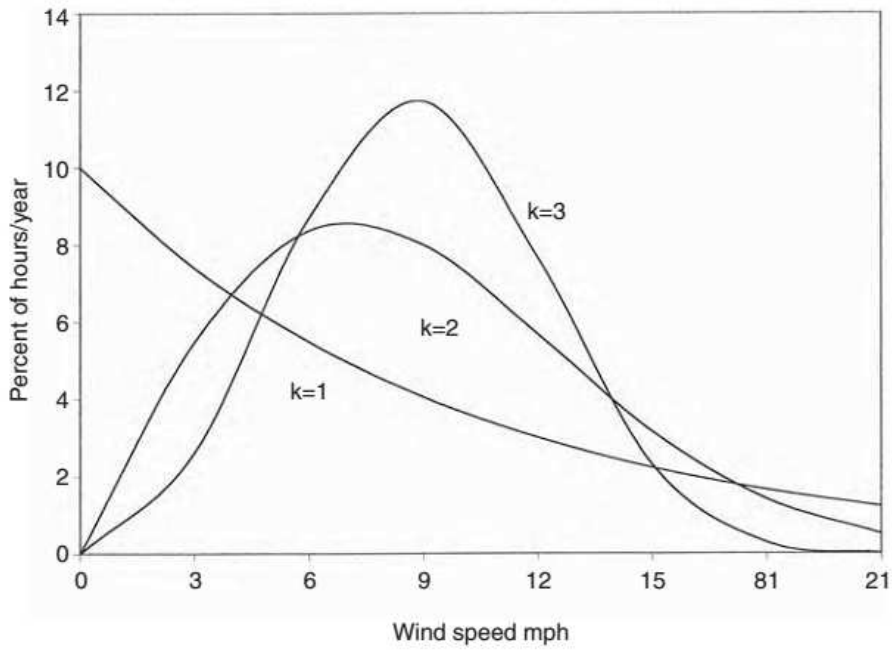

Weibull probability distribution function with scale parameter c = 10 and shape parameters k= 1, 2, and 3.

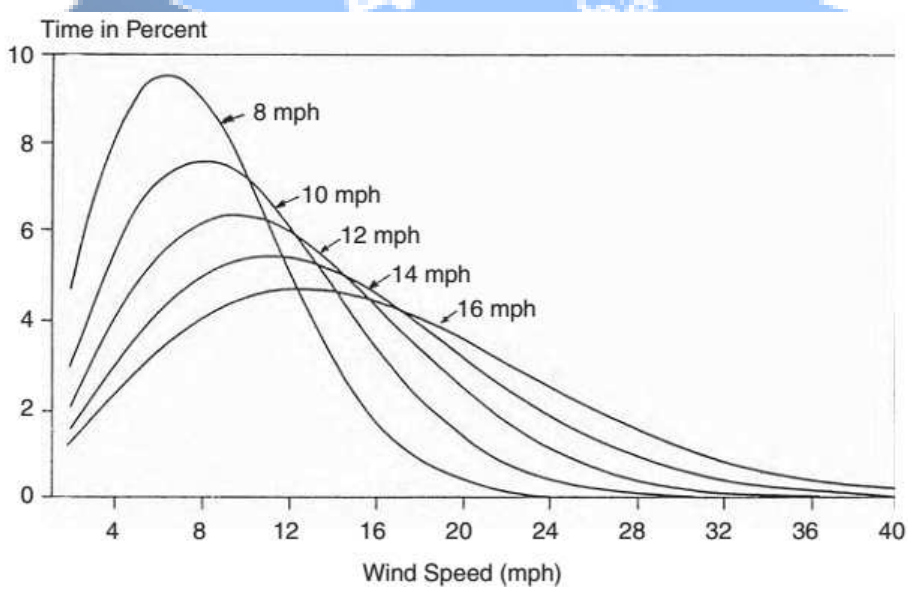

Weibull probability distribution with shape parameter k = 2 and scale parameters ranging from 8 to 16 mph.

Figure 8 shows the distribution curves corresponding to k = 2 with different values of c ranging from 8 to 16 mph (1 mph = 0.446 m/sec). For greater values of c, the curves shift right to the higher wind speeds. That is, the higher the c is, the greater the number of days that have high winds. Because this shifts the distribution of hours at a higher speed scale, c is called the scale parameter.

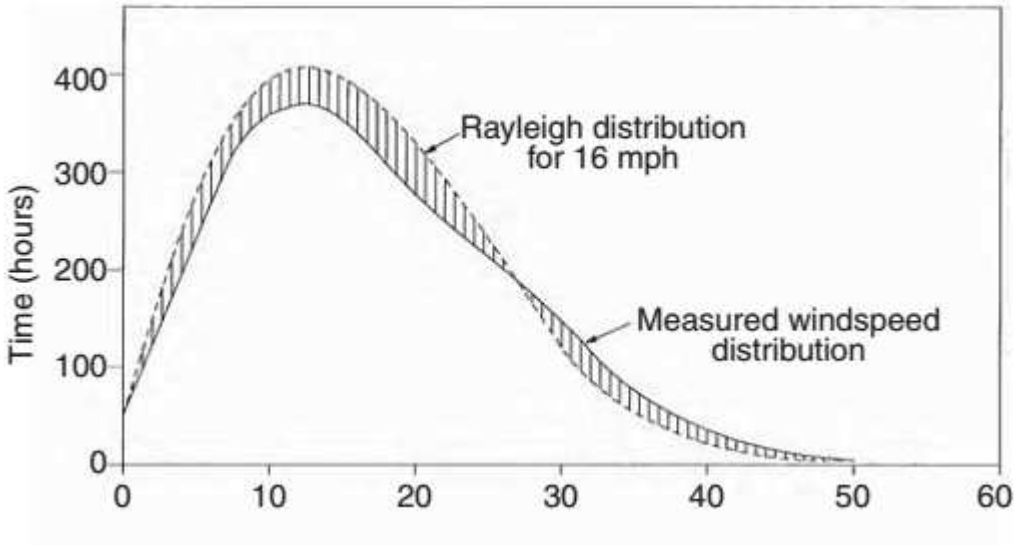

Rayleigh distribution of hours per year compared with measured wind speed distribution at St. Annes Head, Pembrokeshire, U.K.

At most sites, wind speed has the Weibull distribution with k = 2, which is specifically known as the Rayleigh distribution. The actual measurement data taken at most sites compare well with the Rayleigh distribution, as seen in Figure. The Rayleigh distribution is then a simple and accurate enough representation of the wind speed with just one parameter, the scale parameter c. Summarizing the characteristics of the Weibull probability distribution function:

k = 1 makes it the exponential distribution, where $\lambda = 1/c$,

k = 2 makes it the Rayleigh distribution, , and

k > 3 makes it approach a normal bell-shaped distribution.

2.3.2 MODE ANDMEANSPEEDS

We now define the following terms applicable to wind speed:

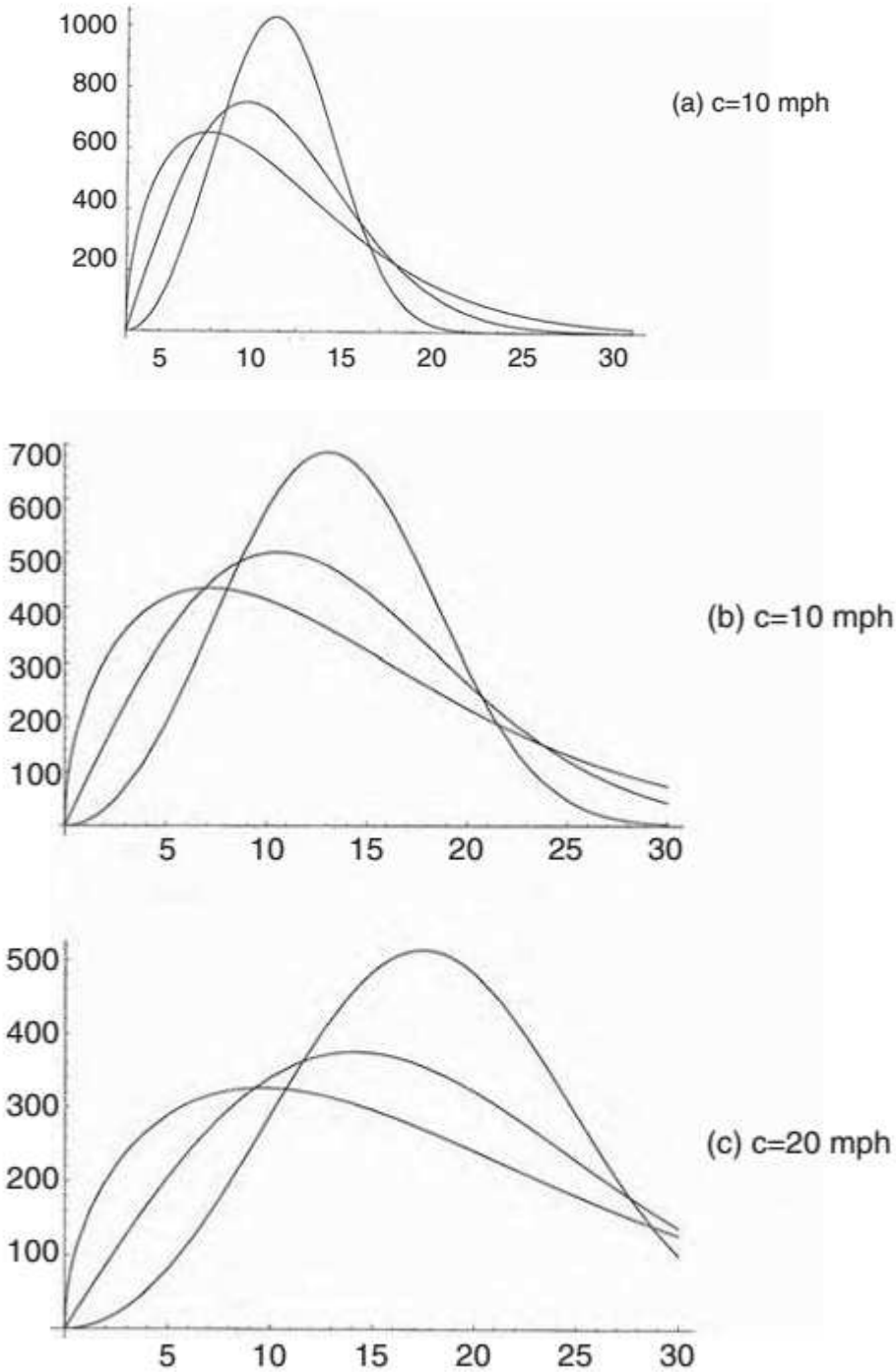

Weibull distributions of hours per year with three different shape parameters k = 1.5, 2, and 3, each with scale parameters c = 10, 15, and 20 mph.

Mode speed is defined as the speed corresponding to the hump in the distribution function. This is the speed of the wind most of the time.

Mean speed over the period is defined as the total area under the h–v curve integrated from v = 0 to ∞ and divided by the total number of hours in the period (8760 if the period is 1 yr). The annual mean speed is therefore the weighted average speed and is given by:

$$V_{\text{mean}} = \frac{1}{8760}\int_{0}^{\infty} hv\,\mathrm{d}v \tag{15}$$

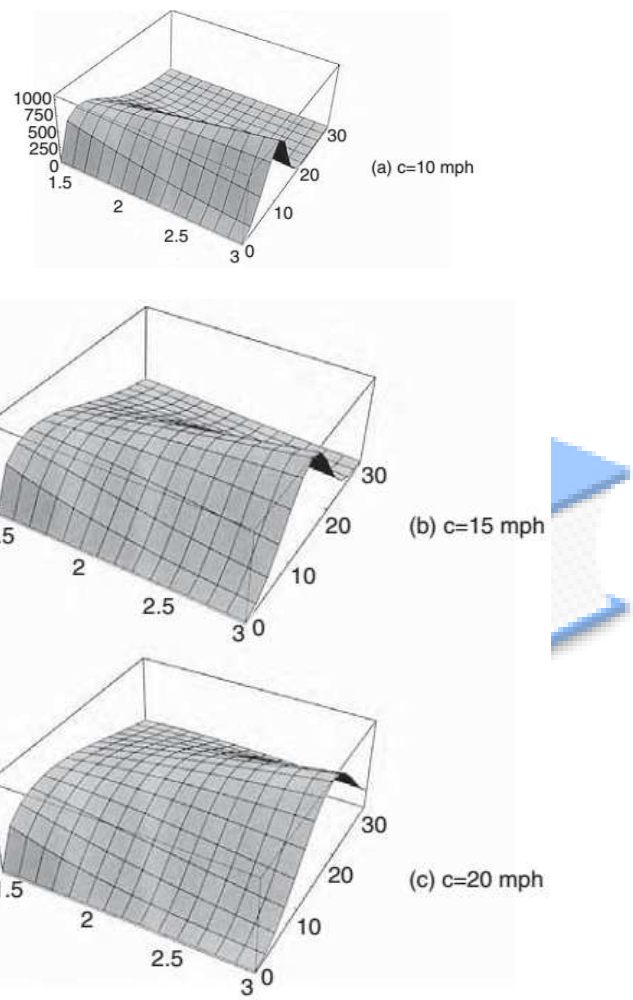

Three-dimensional h–v–k plots with c ranging from 10 to 20 mph and k ranging from 1.5 to 3.0.

For c and k values in the range found at most sites, the integral expression can be approximated to the Gamma function:

$$V_{\text{mean}} = c\sqrt{\left(1+\frac{1}{k}\right)} \tag{16}$$

For the Rayleigh distribution with k = 2, the Gamma function can be further approximated to the following:

$$V_{\text{mean}} = .090C \tag{17}$$

This is a very simple relation between the scale parameter c and V_{mean}, which can be used with reasonable accuracy. For example, most sites are reported in terms of their mean wind speeds. The c parameter in the corresponding Rayleigh distribution is then c = $V_{mean}/0.9$. The k parameter is, of course, 2.0 for the Rayleigh distribution. Thus, we have the Rayleigh distribution of the site using the generally reported mean speed as follows:

$$h(v) = \frac{2v}{c^2}\mathrm{e}^{-\left(\frac{v}{c}\right)^2} = \frac{2v}{(V_{\text{mean}})^2}\mathrm{e}^{-\left(\frac{v}{V_{\text{mean}}}\right)^2} \tag{18}$$

2.3.3 ROOTMEANCUBESPEED

Wind power is proportional to the cube of the speed, and the energy collected over the year is the integral of $hv^3 \cdot dv$. We, therefore, define the root mean cube or the rmc speed in a manner similar to the root mean square (rms) value in alternating current (AC) electrical circuits:

$$V_{\text{rmc}} = \sqrt[3]{\frac{1}{8760}\int_0^{\infty} hv^3 \mathrm{d}v} \tag{19}$$

The rmc speed is useful in quickly estimating the annual energy potential of the site.

$$P_{\text{rmc}} = \frac{1}{4}\rho V_{\text{rmc}}^3 \tag{20}$$

Then, we obtain the annual energy production potential of the site by simply multiplying the P_{rmc} value by the total number of hours in the year.

2.3.4 MODE, MEAN, AND RMC SPEEDS

The important difference between the mode, the mean, and the rmc speeds is illustrated in Table below. The values of the three speeds are compiled for four shape parameters (k = 1.5, 2.0, 2.5, and 3.0) and three scale parameters (c = 10, 15, and 20 mph). The upstream wind power densities are calculated using the respective speeds in the wind power equation $P = \frac{1}{2}\rho V^3$ W/m^2 using the air mass density of 1.225 kg/m^3.

Influence of Shape and Scale Parameters on the Mode, Mean, and RMC Speeds and the Energy Density

c	k	Mode Speed	Mean Speed	RMC Speed	Pmode (W/m²)	Pmean (W/m²)	Prmc (W/m²)	Ermc (KWh/yr)
10	1.5	3.81	9.03	12.60	68	451	1225	5366
	2.0	7.07	8.86	11.00	216	426	814	3565
	2.5	8.15	8.87	10.33	331	428	675	2957
	3.0	8.74	8.93	10.00	409	436	613	2685
15	1.5	7.21	13.54	18.90	230	1521	4134	18107
	2.0	10.61	13.29	16.49	731	1439	2748	12036
	2.5	12.23	13.31	15.49	1120	1444	2278	9978
	3.0	13.10	13.39	15.00	1377	1472	2067	9053
20	1.5	9.61	18.05	25.19	544	3604	9790	42880
	2.0	13.14	17.72	22.00	1731	3410	6514	28531
	2.5	16.30	17.75	20.66	2652	3423	5399	23648
	3.0	17.47	17.86	20.00	3266	3489	4900	21462

Note: P = upstream wind power density in watts per square meter of the blade-swept area = 0.5 ρV^3, where ρ = 1.225 kg/m^3; the last column is the energy potential of the site in kWh per year per m^2 of the blade area, assuming a rotor efficiency C_p of 50% (i.e., the maximum power that can be converted into electric power is 0.25 ρV^3).

2.3.5 ENERGY DISTRIBUTION

If we define the energy distribution function:

$$e = \frac{\text{kWh contribution in the year by the wind between } v \text{ and } (v + \Delta v)}{\Delta v} \qquad (21)$$

then, for the Rayleigh speed distribution (k = 2), the energy distribution would look like the shaded curve in Figure. The wind speed curve has the mode at 5.5m/sec and the mean at 6.35 m/sec. However, because of the cubic relation with speed, the maximum energy contribution comes from the wind speed at 9.45 m/sec. Above this speed, although V^3 continues to increase in a cubic manner, the number of hours at those speeds decreases faster than V^3. The result is an overall decrease in the yearly energy contribution. For this

reason, it is advantageous to design the wind power system to operate at variable speeds in order to capture the maximum energy available during high-wind periods.

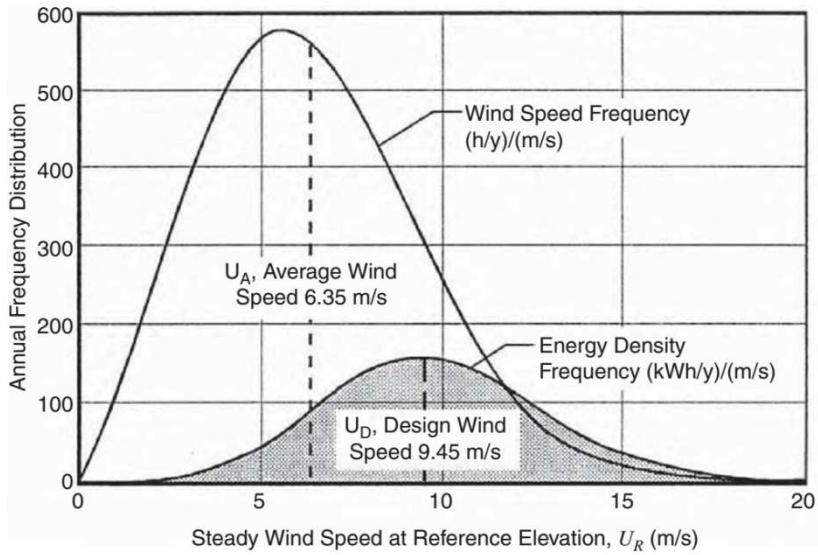

Annual frequency distributions of hours vs. wind speed and energy density per year with c = 10 and k = 2 (Rayleigh distribution).

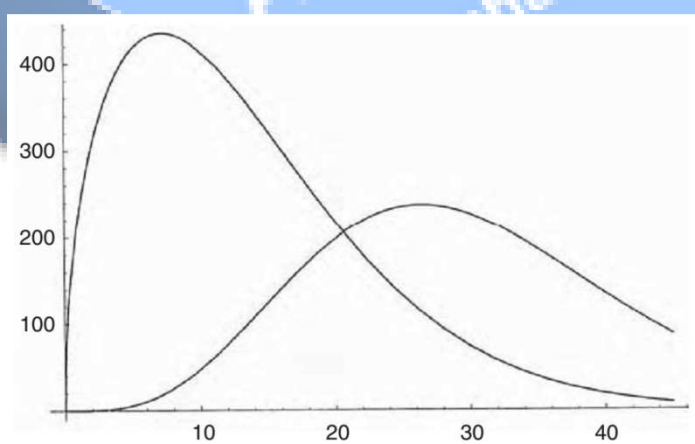

Rayleigh distributions of hours vs. wind speed and energy per year with c = 15 and k = 1. 5.

Above Figure is a similar chart showing the speed and energy distribution functions for a shape parameter of 1.5 and a scale parameter of 15 mph. The mode speed is 10.6 mph, the mean speed is 13.3 mph, and the rmc speed is 16.5 mph. The energy distribution function has the mode at 28.5 mph. That is, the most energy is captured at 28.5-mph wind speed, although the probability of wind blowing at that speed is low.

Comparing above two Figures, we see that as the shape parameter value decreases from 2.0 to 1.5, the speed and the energy modes move farther apart.

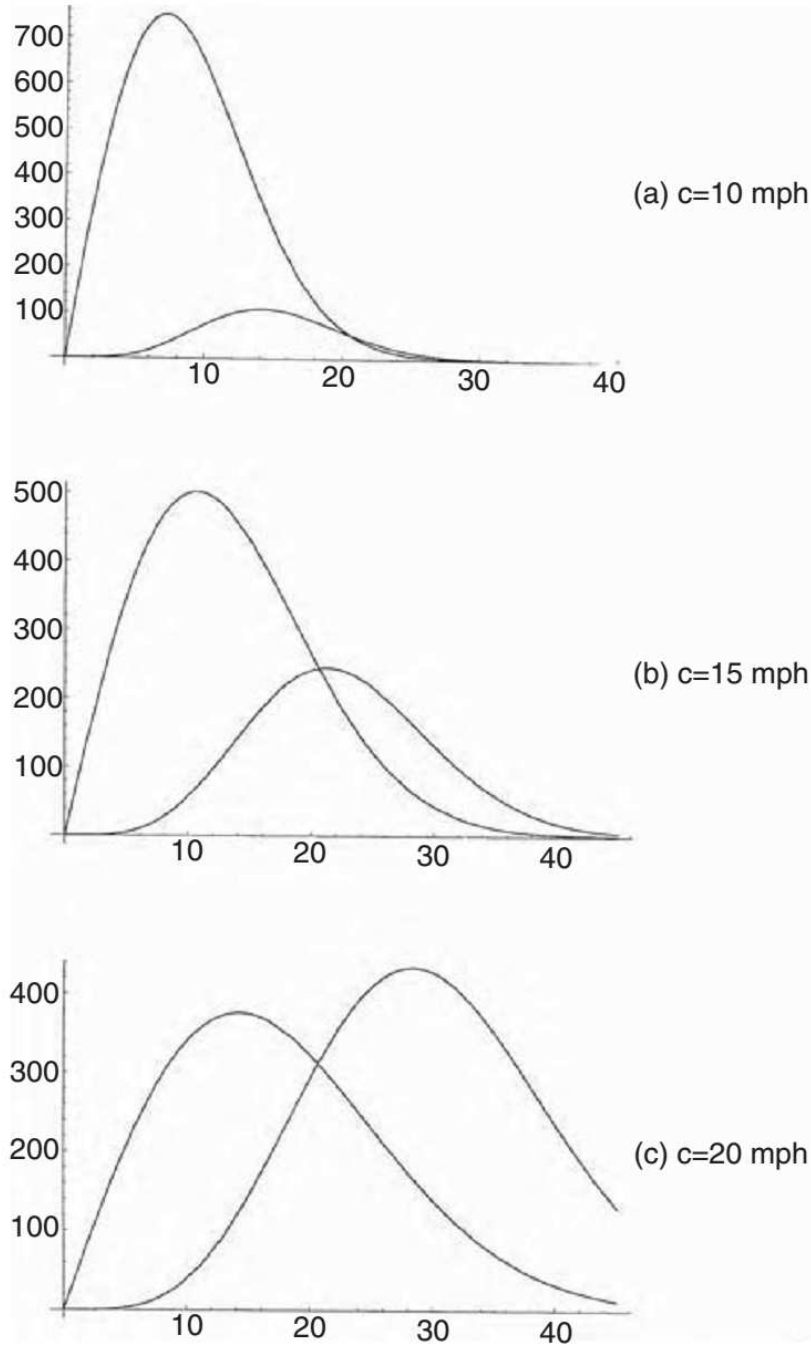

Rayleigh distributions of hours vs. wind speed and energy per year with k = 2 and c = 10, 15, and 20 mph.

On the other hand, as the speed distribution approaches the bell shape for k > 3, the speed and the energy modes get closer to each other.

2.3.6 DIGITALDATAPROCESSING

The mean wind speed over a period of time is obtained by adding numerous readings taken over that period and dividing the sum by the number of readings. Many digital data loggers installed over the last few decades collected average wind speed data primarily for meteorological purposes, as opposed to assessing wind power. They logged the speed every hour, and then averaged over the day, which, in turn, was averaged over the month and over the year. The averaging was done as follows:

$$V_{\text{avg}} = \frac{1}{n}\sum_{i=1}^{n} V_i \qquad (22)$$

The month-to-month wind speed variation at a typical site over the year can be ± 30 to 35% over the annual average. As seen earlier, for assessing the wind power, the rmc speed is what matters. The rmc equivalent of the digital data logging is as follows:

$$V_{\text{rmc}} = \sqrt[3]{\frac{1}{n}\sum_{i=1}^{n} V_i^3} \qquad (23)$$

The preceding equation does not take into account the variation in the air mass density, which is also a parameter (although of second order) in the wind power density. Therefore, a better method of processing wind speed data for power calculations is to digitize the yearly average power density as:

$$P_{\text{rmc}} = \frac{1}{2n}\sum_{i=1}^{n} \rho_i V_i^3 \qquad (24)$$

where

n = number of observations in the averaging period,

ρi = air density (kg/m^3), and

Vi= wind speed (m/sec) at the ith observation time.

2.3.7 EFFECT OF HUB HEIGHT

The wind shear at a ground-level surface causes the wind speed to increase with height in accordance with the following expression:

$$V_2 = V_1 \left(\frac{h_2}{h_1} \right)^{\alpha} \tag{25}$$

Where V1 = wind speed measured at the reference height h_1,

V2= wind speed estimated at height h_2, and

α= ground surface friction coefficient.

2.3.8 IMPORTANCE OFRELIABLEDATA

The most widely available wind speed data in the past came from weather stations at airports. Unfortunately, that is not very useful to wind farm planners, as airports are not necessarily located at favorable wind sites. Other widely used locations in towns and cities for wind measurements have been existing structures such as water towers. Such data can also be unreliable due to shear effect. Near the tower, the wind speed can be 10 to 15% higher or lower than the actual speed. This results in an energy estimate up to 52% on the high side or 60% on the low side, a difference of (1.52/0.60) 2.5 to 1. Such an enormous error could make a site look lucrative, whereas in fact it may not be even marginally economical.

Because airports were intentionally not built on high-wind sites, the good wind sites were left unmonitored for a long time. The new data from such sites are, therefore, limited to a few recent years. For this reason, one must verify the data in more than one way to ascertain high reliability and confidence in its use.

2.4 WIND SPEED PREDICTION

Because the available wind energy at any time depends on the wind speed at that time, which is a random variable, knowing the average annual energy potential of a site is one thing and the ability to accurately predict when the wind will blow is quite another thing. For the wind farm operator, this poses difficulties in system scheduling and energy dispatching as the schedule of wind power availability is not known in advance. However, a reliable forecast of wind speed several hours in advance can give the following benefits:

• Generating schedule can efficiently accommodate wind generation in a timely manner

• Allows the grid-connected wind farm to commit to power purchase contracts in advance for a better price

• Allows investors to proceed with new wind farms and avoid the penalties they must pay if they do not meet their hourly generation targets

Therefore, development of short-term wind-speed-forecasting tools helps wind energy producers. NWTC researchers work in cooperation with the National Oceanic and Atmospheric Administration (NOAA) to validate the nation's wind resource maps and develop methods of short-term (1 to 4 h) wind forecasting. Previously have also proposed a new technique for forecasting wind speed and power output up to several hours in advance. Their technique is based on cross-correlation at neighboring sites and artificial neural networks and is claimed to significantly improve forecasting accuracy compared to the persistence-forecasting model.

2.5 Wind Power System

SYSTEM COMPONENTS

The wind power system comprises one or more wind turbine units operating electrically in parallel. Each turbine is made of the following basic components:

• Tower structure

• Rotor with two or three blades attached to the hub

• Shaft with mechanical gear

• Electrical generator

• Yaw mechanism, such as the tail vane

• Sensors and control

Because of the large moment of inertia of the rotor, design challenges include starting, speed control during the power-producing operation, and stopping the turbine when required. The eddy current or another type of brake is used to halt the turbine when needed for emergency or for routine maintenance.

In a modern wind farm, each turbine must have its own control system to provide operational and safety functions from a remote location. It also must have one or more of the following additional components:

• Anemometers, which measure the wind speed and transmit the data to the controller.

• Numerous sensors to monitor and regulate various mechanical and electrical parameters. A 1-MW turbine may have several hundred sensors.

• Stall controller, which starts the machine at set wind speeds of 8 to 15 mph and shuts off at 50 to 70 mph to protect the blades from overstressing and the generator from overheating.

• Power electronics to convert and condition power to the required standards.

• Control electronics, usually incorporating a computer.

• Battery for improving load availability in a stand-alone plant.

• Transmission link for connecting the plant to the area grid.

The following are commonly used terms and terminology in the wind power industry:

Low-speed shaft: The rotor turns the low-speed shaft at 30 to 60 rotations per minute (rpm).

High-speed shaft: It drives the generator via a speed step-up gear.

Brake: A disc brake, which stops the rotor in emergencies. It can be applied mechanically, electrically, or hydraulically.

Gearbox: Gears connect the low-speed shaft to the high-speed shaft and increase the turbine speed from 30 to 60 rpm to the 1200 to 1800 rpm required by most generators to produce electricity in an efficient manner.

Because the gearbox is a costly and heavy part, design engineers are exploring slow-speed, direct-drive generators that need no gearbox.

Generator: It is usually an off-the-shelf induction generator that produces 50- or 60-Hz AC power.

Nacelle: The rotor attaches to the nacelle, which sits atop the tower and includes a gearbox, low- and high-speed shafts, generator, controller, and a brake. A cover protects the components inside the nacelle. Some nacelles are large enough for technicians to stand inside while working.

Pitch: Blades are turned, or pitched, out of the wind to keep the rotor from turning in winds that have speeds too high or too low to produce electricity.

Upwind and downwind: The upwind turbine operates facing into the wind in front of the tower, whereas the downwind runs facing away from the wind after the tower.

Vane: It measures the wind direction and communicates with the yaw drive to orient the turbine properly with respect to the wind.

Yaw drive: It keeps the upwind turbine facing into the wind as the wind direction changes. A yaw motor powers the yaw drive. Downwind turbines do not require a yaw drive, as the wind blows the rotor downwind.

The design and operating features of various system components are described in the following subsections.

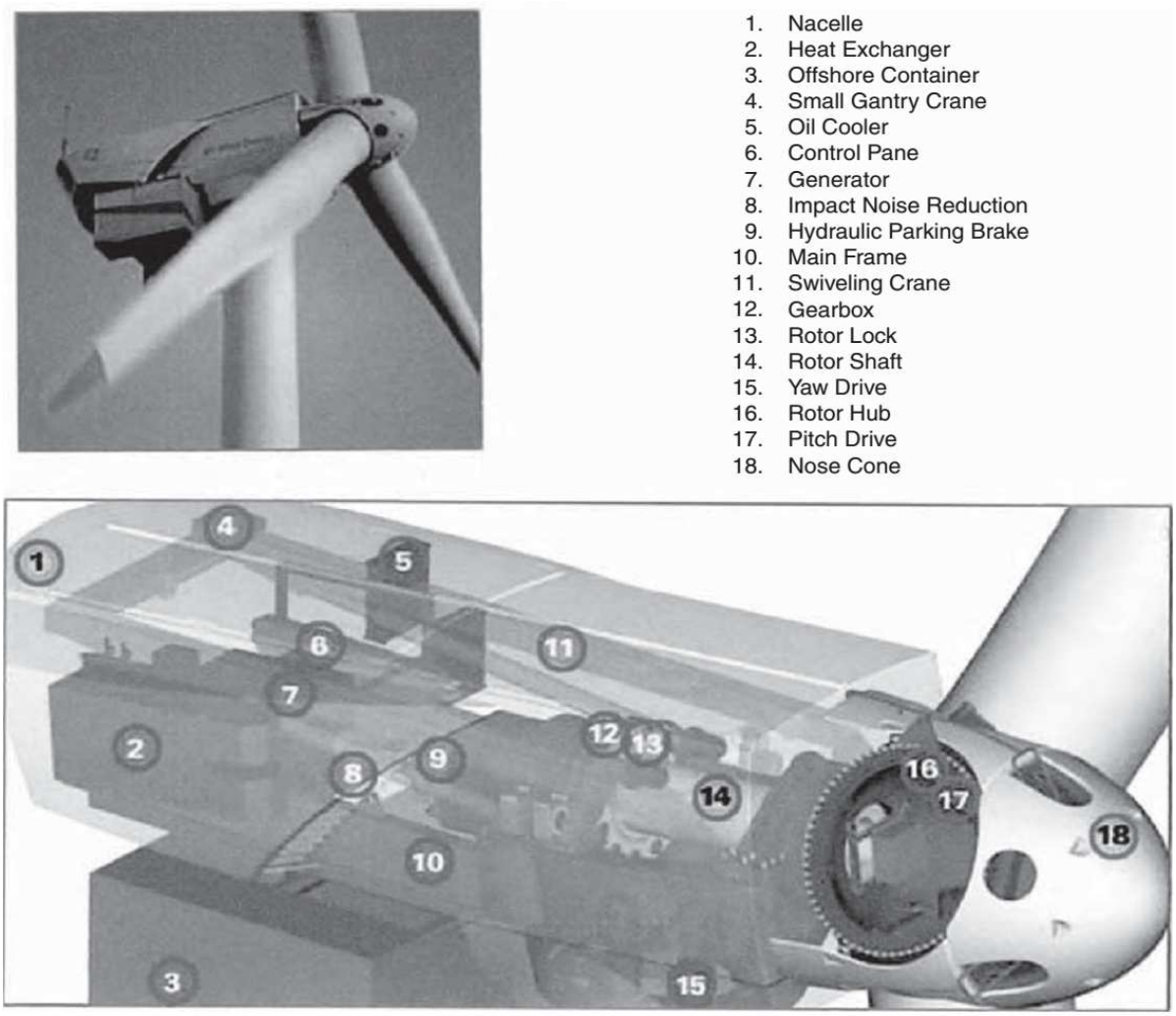

Nacelle details of a 3.6-MW/104-m-diameter wind turbine. (From GE Wind Energy. With permission.)

A. TOWER

The wind tower supports the rotor and the nacelle containing the mechanical gear, the electrical generator, the yaw mechanism, and the stall control. Figure depicts the component details and layout in a large nacelle, and Figure shows the installation on the tower. The height of the tower in the past has been in the 20 to 50 m range. For medium- and large-sized turbines, the tower height is approximately equal to the rotor diameter, as seen in the dimension drawing of a 600-kW wind turbine (Figure 4.4). Small turbines are generally mounted on the tower a few rotor diameters high. Otherwise, they would suffer fatigue due to the poor wind speed found near the ground surface. Figure 4.5 shows tower heights of various-sized wind turbines relative to some known structures.

Both steel and concrete towers are available and are being used. The construction can be tubular or lattice. Towers must be at least 25 to 30 m high to avoid turbulence caused by trees and buildings. Utility-scale towers are typically twice as high to take advantage of the swifter winds at those heights.

The main issue in the tower design is the structural dynamics. The tower vibration and the resulting fatigue cycles under wind speed fluctuation are avoided by the design. This requires careful avoidance of all resonance frequencies of the tower, the rotor, and the nacelle from the wind fluctuation frequencies. Sufficient margin must be maintained between the two sets of frequencies in all vibrating modes.

The resonance frequencies of the structure are determined by complete modal analyses, leading to the eigenvectors and Eigen values of complex matrix equations representing the motion of the structural elements. The wind fluctuation frequencies are found from the measurements at the site under consideration. Experience on a similar nearby site can bridge the gap in the required information.

Big cranes are generally required to install wind towers. Gradually increasing tower height, however, is bringing a new dimension in the installation. Large rotors add to the transportation problem as well. Tillable towers to nacelle and rotors moving upwards along with the tower are among some of the newer developments in wind tower installation. The offshore installation comes with its own challenge that must be met.

B. TURBINE

Wind turbines are manufactured in sizes ranging from a few kW for stand-alone remote applications to a few MW each for utility-scale power generation. The turbine size has been steadily increasing. The average size of the turbine installed worldwide in 2002 was over 1 MW. By the end of 2003, about 1200 1.5-MW turbines made by GE Wind Energy alone were installed and in operation. Today, even larger machines are being routinely

installed on a large commercial scale, such as GE's new 3.6-MW turbines for offshore wind farms both in Europe and in the U.S. It offers lighter variable-speed, pitch-controlled blades on a softer support structure, resulting in a cost-effective foundation. Its rated wind speed is 14 m/sec with cut in speed at 3.5 m/sec and the cutout at 25 m/sec. The blade diameter is 104 m with

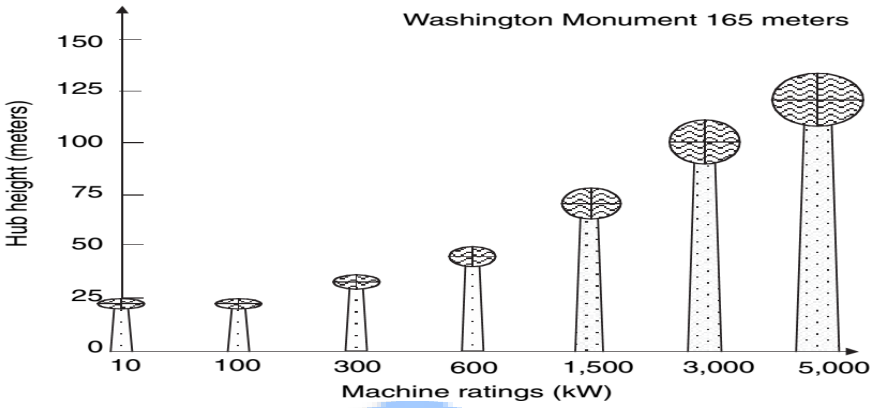

Tower heights of various capacity wind turbines.

hub height 100 m on land and 75 m offshore. In August 2002, Enercon's 4.5-MW wind turbine prototype was installed near Magdeburgh in eastern Germany. It has a 113-m rotor diameter, 124-m hub height, and an egg-shaped nacelle. Its reinforced concrete tower diameter is 12 m at the base, tapering to 4 m at the top. Today, even 5-MW machines are being installed in large offshore wind farms. The mass of a 5-MW turbine can vary from 150 to 300 t in nacelle and 70 to 100 t in the rotor blades, depending on the manufacturing technologies adopted at the time of design. The most modern designs would naturally be on the lighter side of the range.

Turbine procurement requires detailed specifications, which are often tailored from the manufacturers' specifications. The leading manufacturers of wind turbines in the world are listed in Table 4.1, with Denmark's Vestas leading with 22% of the world's market share. The major suppliers in the U.S. are GE Wind (52%), Vestas (21%), Mitsubishi (12%), NEG Micon (10%), and Gamesha (3%).

C. BLADES

Modern wind turbines have two or three blades, which are carefully constructed airfoils that utilize aerodynamic principles to capture as much power as possible. The airfoil design uses a longer upper-side surface whereas the bottom surface remains somewhat uniform. By the Bernoulli principle, a "lift" is created on the airfoil by the pressure difference in the wind flowing over the top and bottom surfaces of the foil. This aerodynamic lift force flies the plane high, but rotates the wind turbine blades about the hub. In addition to the lift force on the blades, a drag force is created, which acts

perpendicular to the blades, impeding the lift effect and slowing the rotor down. The design objective is to get the highest lift-to-drag ratio that can be varied along the length of the blade to optimize the turbine's power output at various speeds.

The rotor blades are the foremost visible part of the wind turbine, and represent the forefront of aerodynamic engineering. The steady mechanical stress due to centrifugal forces and fatigue under continuous vibrations make the blade design the weakest mechanical link in the system. Extensive design effort is needed to avoid premature fatigue failure of the blades. A swift increase in turbine size has been recently made possible by the rapid progress in rotor blade technology, including emergence of the carbon- and glass-fiber-based epoxy composites. The turbine blades are made of high-density wood or glass fiber and epoxy composites.

The high pitch angle used for stall control also produces a high force. The resulting load on the blade can cause a high level of vibration and fatigue, possibly leading to a mechanical failure. Regardless of the fixed- or variable-speed design, the engineer must deal with the stall forces. Researchers are moving from the 2-D to 3-D stress analyses to better understand and design for such forces. As a result, the blade design is continually changing, particularly at the blade root where the loading is maximum due to the cantilever effect.

The aerodynamic design of the blade is important, as it determines the energy capture potential. The large and small machine blades have significantly different design philosophies. The small machine sitting on a tower relatively taller than the blade diameter, and generally unattended, requires a low-maintenance design. On the other hand, a large machine tends to optimize aerodynamic performance for the maximum possible energy capture. In either case, the blade cost is generally kept below 10% of the total installed cost.

D. SPEED CONTROL

The wind turbine technology has changed significantly in the last 25 yr.1 Large wind turbines being installed today tend to be of variable-speed design, incorporating pitch control and power electronics. Small machines, on the other hand, must have simple, low-cost power and speed control. The speed control methods fall into the following categories:

No speed control whatsoever: In this method, the turbine, the electrical generator, and the entire system are designed to withstand the extreme speed under gusty winds.

Yaw and tilt control: The yaw control continuously orients the rotor in the direction of the wind. It can be as simple as the tail vane or more complex on modern towers. Theoretical

considerations dictate free yaw as much as possible. However, rotating blades with large moments of inertia produce high gyroscopic torque during yaw, often resulting in loud noise. A rapid yaw may generate noise exceeding the local ordinance limit. Hence, a controlled yaw is often required and used, in which the rotor axis is shifted out of the wind direction when the wind speed exceeds the design limit.

Pitch control: This changes the pitch of the blade with changing wind speed to regulate the rotor speed. Large-scale power generation is moving towards variable-speed rotors with power electronics incorporating a pitch control.

Stall control: Yaw and tilt control gradually shifts the rotor axis in and out of the wind direction. But, in gusty winds above a certain speed, blades are shifted (profiled) into a position such that they stall and do not produce a lift force. At stall, the wind flow ceases to be smooth around the blade contour, but separates before reaching the trailing edge. This always happens at a high pitch angle. The blades experience a high drag, thus lowering the rotor power output. This way, the blades are kept under the allowable speed limit in gusty winds. This not only protects the blades from mechanical overstress, but also protects the electrical generator from overloading and overheating. Once stalled, the turbine has to be restarted after the gust has subsided.

2.6 TURBINE RATING

The method of assessing the nominal rating of a wind turbine has no globally accepted standard. The difficulty arises because the power output of the turbine depends on the square of the rotor diameter and the cube of the wind speed. The rotor of a given diameter, therefore, would generate different power at different wind speeds. A turbine that can generate 300 kW at 7 m/sec would produce 450 kW at 8 m/sec wind speed. What rating should then be assigned to this turbine? Should we also specify the rated speed? Early wind turbine designers created a rating system that specified the power output at some arbitrary wind speed. This method did not work well because everyone could not agree on one speed for specifying the power rating. The “rated” wind speeds varied from 10 to 15 m/sec under this practice. Manufacturers quoted on the higher side to claim a greater output from the same design.

Such confusion in quoting the rating was avoided by some European manufacturers who quoted only the rotor diameter. But the confusion continued as to the maximum power the machine can generate under the highest wind speed in which the turbine can continuously and safely operate. Many manufacturers have, therefore, adopted the combined rating designations x/y, the generator’s peak electrical capacity followed by the wind turbine diameter. For example, a 300/30-kW/m wind system means a 300-kW electrical generator and a 30-m diameter turbine. The specific rated capacity (SRC) is often used as a

comparative index of the wind turbine designs. It measures the power generation capacity per square meter of the blade-swept area, and is defined as follows in units of kW/m^2:

$$SRC = \frac{\text{Generator electrical capacity}}{\text{Rotor-swept area}}$$

The SRC for a 300/30 wind turbine is $300/\pi \times 15^2 = 0.42$ kW/m^2. It increases with diameter, giving favorable economies of scale for large machines, and ranges from approximately 0.2 kW/m^2 for a 10-m diameter rotor to 0.5 kW/m^2 for a 40-m diameter rotor. Some aggressively rated turbines have an SRC of 0.7 kW/m^2, and some reach as high as 1 kW/m^2. The higher-SRC rotor blades have higher operating stresses, which result in a shorter fatigue life. All stress concentration regions are carefully identified and eliminated in high-SRC designs. Modern design tools, such as the finite element stress analysis and the modal vibration analysis, can be of great value in rotor design.

Turbine rating is important as it indicates to the system designer how to size the electrical generator, the plant transformer, and the connecting cables to the substation and the transmission link interfacing the grid. The power system must be sized on the peak capacity of the generator. Because turbine power depends on the cube of the wind speed, the system-design engineer matches the turbine and the generator performance characteristics. This means selecting the rated speed of the turbine to match with the generator. As the gearbox and generator are manufactured only in discrete sizes, selecting the turbine's rated speed can be complex. The selection process goes through several iterations, trading the cost with benefit of the available speeds. Selecting a low rated speed would result in wasting much energy at high winds. On the other hand, if the rated speed is high, the rotor efficiency will suffer most of the time.

2.7 MAXIMUM ENERGY CAPTURE

The wind power system design must optimize the annual energy capture at a given site. The only operating mode for extracting the maximum energy is to vary the turbine speed with varying wind speed such that at all times the TSR is continuously equal to that required for the maximum power coefficient Cp. The theory and field experience indicate that the variable-speed operation yields 20 to 30% more power than with the fixed-speed operation. Nevertheless, the cost of variable-speed control is added. In the system design, this trade-off between energy increase and cost increase has to be optimized. In the past, the added costs of designing the variable pitch rotor, or the speed control with power electronics, outweighed the benefit of the increased energy capture. However, the falling prices of power electronics for speed control and the availability of high-strength fiber

composites for constructing high-speed rotors have made it economical to capture more energy when the speed is high. The variable-speed operation has an indirect advantage. It allows controlling the active and reactive powers separately in the process of automatic generation control. In fixed-speed operation, on the other hand, the rotor is shut off during high wind speeds, losing significant energy. The pros and cons of fixed- and variable speed operations are listed in Table.

Almost all major suppliers now offer variable-speed systems in combination with pitch regulation. Potential advantages of the variable-speed system include active grid support, peak-power-tracking operation, and cheaper offshore foundation structure. The doubly fed induction generator is being used in some large wind turbines such as NEG Micon's 4.2-MW, 110-m diameter machines and multi-megawatt GE machines. It is an emerging trendsetting technology in the variable-speed gear-driven systems, primarily because only the slip frequency power (20 to 30% of the total) has to be fed through the frequency converter. This significantly saves power electronics cost.

Advantages of Fixed- and Variable-Speed Systems

Fixed-Speed System	Variable-Speed System
Simple and inexpensive electrical system	Higher rotor efficiency, hence, higher energy capture per year
Fewer parts, hence, higher reliability	Low transient torque
Lower probability of excitation of mechanical resonance of the structure	Fewer gear steps, hence, inexpensive gear box
No frequency conversion, hence, no current harmonics present in the electrical system	Mechanical damping system not needed; the electrical system could provide damping if required
Lower capital cost	No synchronization problems
	Stiff electrical controls can reduce system voltage sags

MAXIMUM POWER OPERATION

As seen earlier, operating the wind turbine at a constant TSR corresponding to the maximum power point at all times can generate 20 to 30% more electricity per year. However, this requires a control scheme to operate with a variable speed to continuously generate the maximum power. Two possible schemes for such an operation are as follows:

2.7.1 CONSTANT-TSR SCHEME

In this scheme the machine is continuously operated at its optimum TSR, which is a characteristic of the given wind turbine. This optimum value is stored as the reference TSR in the control computer. The wind speed is continuously measured and compared with the blade tip speed. The error signal is then fed to the control system, which changes the turbine speed to minimize the error. At this time the rotor must be operating at the reference TSR, generating the maximum power. This scheme has the disadvantage of requiring the local wind speed measurements, which could have a significant error, particularly in a large wind farm with shadow effects. Being sensitive to the changes in the blade surface, the optimum TSR gradually changes with age and environment. The computer reference TSR must be changed accordingly many times, which is expensive. Besides, it is difficult to determine the new optimum TSR with changes that are not fully understood or easily measured.

2.7.2 PEAK-POWER-TRACKINGSCHEME

The power vs. speed curve has a single well-defined peak. If we operate at the peak point, a small increase or decrease in the turbine speed would result in no change in the power output, as the peak point locally lies in a flat neighborhood. In other words, a necessary condition for the speed to be at the maximum power point is as follows:

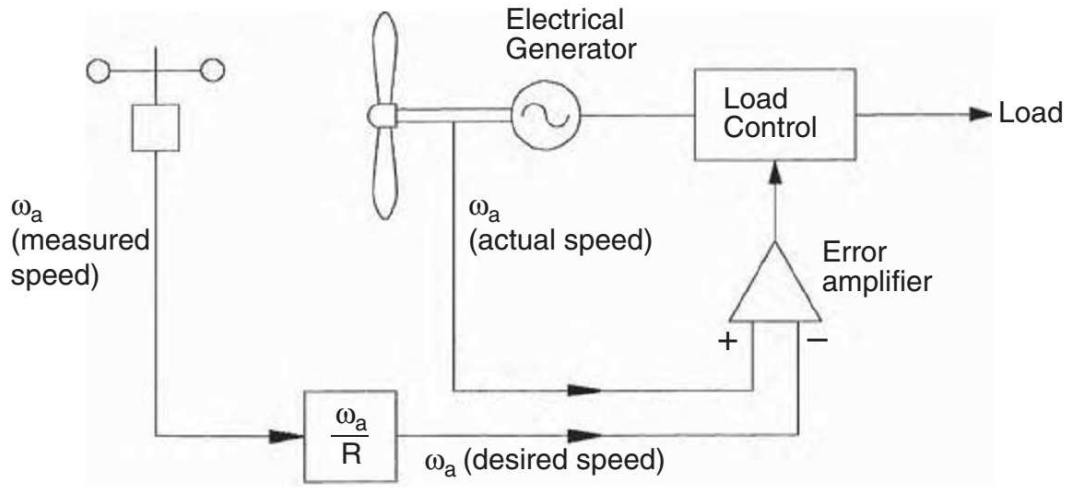

Maximum power operation using rotor tip speed control scheme.

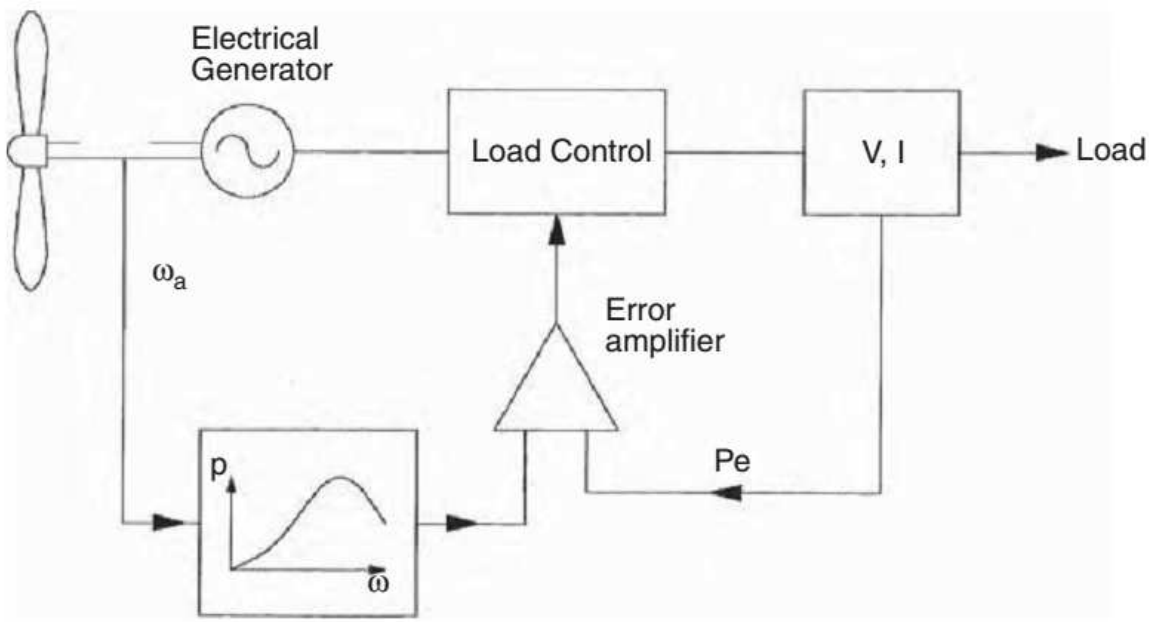

Maximum power operation using power control scheme.

This principle is used in the control scheme. The speed is increased or decreased in small increments, the power is continuously measured, and $\Delta P/\Delta\omega$ is continuously evaluated. If this ratio is positive — meaning we get more power by increasing the speed — the speed is further increased. On the other hand, if the ratio is negative, the power generation will reduce if we change the speed any further. The speed is maintained at the level where $\Delta P/\Delta\omega$ is close to zero. This method is insensitive to errors in local wind speed measurement, and also to wind turbine design. It is, therefore, the preferred method. In a multiple-machine wind farm, each turbine must be controlled by its own control loop with operational and safety functions incorporated.

2.8 SYSTEM-DESIGN FEATURES

When the land area is limited or is at a premium price, one optimization study that must be conducted in an early stage of the wind farm design is to determine the number of turbines, their size, and the spacing for extracting the maximum energy from the farm annually. The system trade-offs in such a study are as follows:

2.8.1. TURBINETOWERS ANDSPACING

Large turbines cost less per megawatt of capacity and occupy less land area. On the other hand, fewer large machines can reduce the megawatt-hour energy crop per year, as downtime of one machine would have larger impact on the energy output. A certain turbine size may stand out to be the optimum for a given wind farm from the investment and energy production cost points of view.

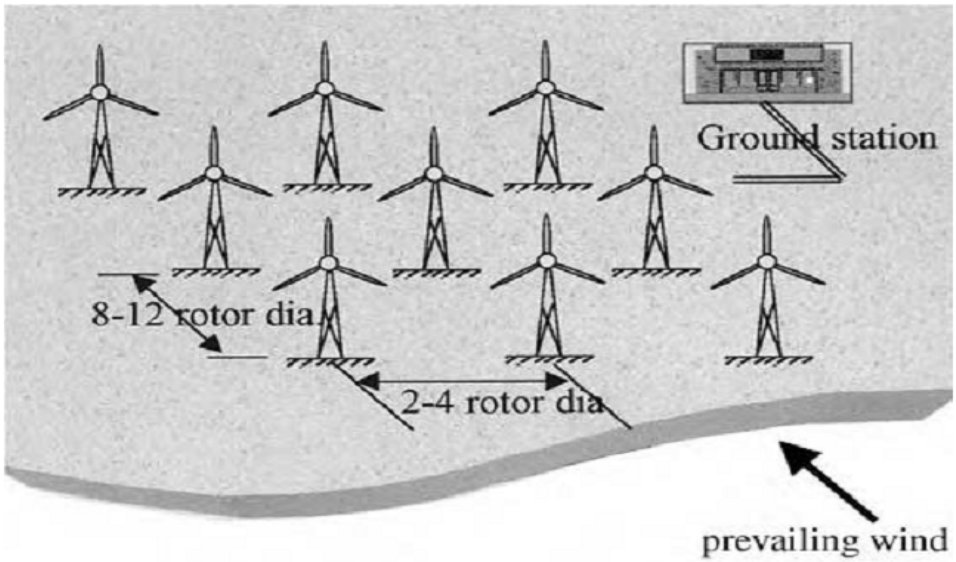

Optimum tower spacing in wind farms in flat terrain.

Tall towers are beneficial, but the height must be optimized with the local regulations and constrains of the terrain and neighborhood. Nacelle weight and structural dynamics are also important considerations.

When installing a cluster of machines in a wind farm, certain spacing between the wind towers must be maintained to optimize the energy crop over the year. The spacing depends on the terrain, wind direction, wind speed, and turbine size.

The optimum spacing is found in rows 8 to 12 rotor diameters apart in the wind direction, and 2 to 4 rotor diameters apart in the crosswind direction. A wind farm consisting of 20 towers, rated at 500 kW each, needs 1 to 2 km^2 of land area. Of this, less than 5% of the land is actually required for turbine towers and access roads. The remaining land could continue its original use. Thus, wind turbines can co-exist with grazing, farming, fishing, and recreational use. The average number of machines in wind farms varies greatly, ranging from several to hundreds depending on the required power capacity of the farm. The preceding spacing rules would ensure that the turbines do not shield those further downwind. Some wind farms have used narrow spacing of five to six rotor diameters in the wind direction. One such farm in Mackinaw City, MI, has reported the rotors in

downwind direction running slower due to the wake effect of the upwind rotors. The wind power fluctuations and electrical transients on fewer large machines would cost more in the filtering of power and voltage fluctuations, or would degrade the quality of power, inviting penalty from the grid.

The optimization method presented, takes into account the preceding trades. Additionally, it includes the effect of tower height that goes with the turbine diameter, available standard ratings, cost at the time of procurement, and wind speed.

The wake interaction and tower shadow are ignored for simplicity. Such optimization leads to a site-specific number and size of the wind turbines that will minimize the energy cost.

2.8.2 NUMBER OF BLADES

One can extract the power available in the wind with a small number of blades rotating quickly, or a large number of blades rotating slowly. More blades do not give more power, but they give more torque and require heavier construction. A few fast-spinning blades result in an economical system. Wind machines have been built with the number of blades ranging from 1 to 40 or more. A one-blade machine, although technically feasible, gives a supersonic tip speed and a highly pulsating torque, causing excessive vibrations. It is, therefore, hardly used in large systems. A very high number of blades were used in old low-TSR rotors for water pumping and grain milling, the applications requiring high starting torque. Modern high-TSR rotors for generating electric power have two or three blades, many of them with just two, although the Danish standard is three blades. The major factors involved in deciding the number of blades are as follows:

• The effect on power coefficient

• The design TSR

• The means of limiting yaw rate to reduce the gyroscopic fatigue

Compared to the two-blade design, the three-blade machine has smoother power output and a balanced gyroscopic force. There is no need to teeter the rotor, allowing the use of a simple rigid hub. Three blades are more common in Europe, where large machines up to a few MW are being built using the three-blade configuration.

2.8.3. ROTOR UPWIND OR DOWNWIND:

Operating the rotor upwind of the tower produces higher power as it eliminates the tower shadow on the blades. This results in lower noise, lower blade fatigue, and smoother power output. A drawback is that the rotor must constantly be turned into the wind via the

yaw mechanism. The heavier yaw mechanism of an upwind turbine requires a heavy-duty and stiffer rotor compared to a downwind rotor.

The downwind rotor has the wake (wind shade) of the tower in the front and loses some power from the slight wind drop. On the other hand, it allows the use of a free yaw system. It also allows the blades to deflect away from the tower when loaded. Its drawback is that the machine may yaw in the same direction for a long period of time, which can twist the cables that carry current from the turbines.

Both types have been used in the past with no clear trend. However, the upwind rotor configuration has recently become more common.

2.8.4. HORIZONTAL VS. VERTICAL AXIS

In the horizontal-axis Danish machine, considered to be classical, the axis of blade rotation is horizontal with respect to the ground and parallel to the wind stream. Most wind turbines are built today with the horizontal-axis design, which offers a cost-effective turbine construction, installation, and control by varying the blade pitch. The vertical-axis Darrieus machine has different advantages. First of all, it is Omni directional and requires no yaw mechanism to continuously orient itself toward the wind direction. Secondly, its vertical drive shaft simplifies the installation of the gearbox and the electrical generator on the ground, making the structure much simpler. On the negative side, it normally requires guy wires attached to the top for support. This could limit its applications, particularly at offshore sites. Overall, the vertical-axis machine has not been widely used, primarily because its output power cannot be easily controlled in high winds simply by changing the blade pitch. With modern low-cost variable-speed power electronics emerging in the wind power industry, the Darrieus configuration may revive, particularly for large-capacity applications.

The Darrieus has structural advantages compared to a horizontal-axis turbine because it is balanced. The blades only “see” the maximum lift torque twice per revolution. Seeing maximum torque on one blade once per revolution excites many natural frequencies, causing excessive vibrations. Also a vertical-axis wind turbine configuration is set on the ground. Therefore, it is unable to effectively use higher wind speeds using a higher tower, as there is no tower here.

2.10. SYSTEM CONTROL REQUIREMENTS

Both the speed and the rate of change must be controlled in a good system design.

2.10.1. SPEEDCONTROL

The rotor speed must be controlled for three reasons:

• To capture more energy, as seen before.

• To protect the rotor, generator, and power electronic equipment from overloading during high-gust winds.

• When the generator is disconnected from the electrical load, accidentally or for a scheduled event. Under this condition, the rotor speed may run away, destroying it mechanically, if it is not controlled.

The speed control requirement of the rotor has five separate regions as shown in figure:

1. The cut-in speed at which the turbine starts producing power. Below this speed, it is not worthwhile, nor efficient, to turn the turbine on.

2. The constant maximum C_p region where the rotor speed varies with the wind speed variation to operate at the constant TSR corresponding to the maximum C_p value.

3. During high winds, the rotor speed is limited to an upper constant limit based on the design limit of the system components. In the constant-speed region, the C_p is lower than the maximum C_p, and the power increases at a lower rate than that in the first region.

4. At still higher wind speeds, such as during a gust, the machine is operated at a controlled constant power to protect the generator and power electronics from overloading. This can be achieved by lowering the rotor speed. If the speed is decreased by increasing the electrical load, then the generator will be overloaded, defeating the purpose. To avoid generator overloading, some sort of a brake (eddy current or another type) must be installed on the rotor.

5. The cutout speed, at which the rotor is shut off to protect the blades, the electrical generator, and other components of the system beyond a certain wind speed.

2.10.2. RATE CONTROL

The inertia of large rotors must be taken into account in controlling the speed. The acceleration and deceleration must be controlled to limit the dynamic mechanical stresses on the blades and hub, and the electrical load on the generator and power electronics. The instantaneous difference between the mechanical power produced by the blades and the electric power delivered by the generator will change the rotor speed as follows:

$$J\frac{d\omega}{dt} = \frac{P_m - P_e}{\omega} \tag{25}$$

where

J = polar moment of inertia of the rotor

ω = angular speed of the rotor

P_m = mechanical power produced by the blades

P_e = electric power delivered by the generator

2.11 Stand alone and grid connected operation

A. STAND ALONE OPERATION:

A simple stand-alone wind system using a constant-speed generator is shown in fig. It has many features that are similar to the PV stand-alone system. For a small wind system supplying local loads, a PM DC generator makes the system simple and easier to operate. The induction generator, on the other hand, gives AC power, which is used by most consumers these days. The generator is self-excited by shunt capacitors connected to the output terminals. The frequency is controlled by controlling the turbine speed. The battery is charged by an AC–DC rectifier and discharged through a DC–AC inverter.

The wind stand-alone power system is often used for powering farms. In Germany, nearly half the wind systems installed on farms are owned either by individual farmers or by an association. The performance of turbines under the "250 MW Wind" program is monitored and published by ISET, the Institute of Solar Energy and Technology at the University of Kassel.

The performance reports are also available from the German Wind Energy Institute. The reports list all installations, their performance, and any technical problems.

This includes determining the capacitor rating needed to self-excite the generator for the desired voltage and frequency. The power factor of load has a great effect on both the steady-state and the transient performance of the induction generator. The load power factor can be unity, lagging or leading, depending on the load's being resistive, inductive, or capacitive, respectively. Most loads in the aggregate are inductive with a power factor of about 0.9 lagging. Unlike in the synchronous generator, the induction generator output current and power factor for a given load are determined by the generator parameters.

Therefore, when the induction generator delivers a certain load, it also supplies a certain in-phase current and a certain quadrature current. The quadrature current is supplied by the capacitor bank connected to the terminals. Therefore, the induction generator is not suitable for supplying a low-power-factor load.

The transient performance of the stand-alone, self-excited induction generator, on the other hand, is more involved. The generalized d-q axis model of the generator is required. Computer simulation using a d-q axis model shows the following general transient characteristics:

• Under sudden loss of self-excitation due to tripping-off of the capacitor bank, the resistive and inductive loads cause the terminal voltage to quickly reach the steady-state zero. A capacitive load takes a longer time before the terminal voltage decays to zero.

• Under sudden loading of the generator, resistive and inductive loads result in a sudden voltage drop, whereas a capacitive load has little effect on the terminal voltage.

• Under sudden loss of resistive and inductive loads, the terminal voltage quickly rises to its steady-state value.

• At light load, the magnetizing reactance changes to its unsaturated value, which is large. This makes the machine performance unstable, resulting in terminal-voltage collapse. To remedy this instability problem, the standalone induction generator must always have a minimum load, a dummy if necessary, permanently connected to its terminals.

HYBRID WITH DIESEL

The certainty of meeting load demands at all times is greatly enhanced by hybrid systems, which use more than one power source. Most hybrids use a diesel generator

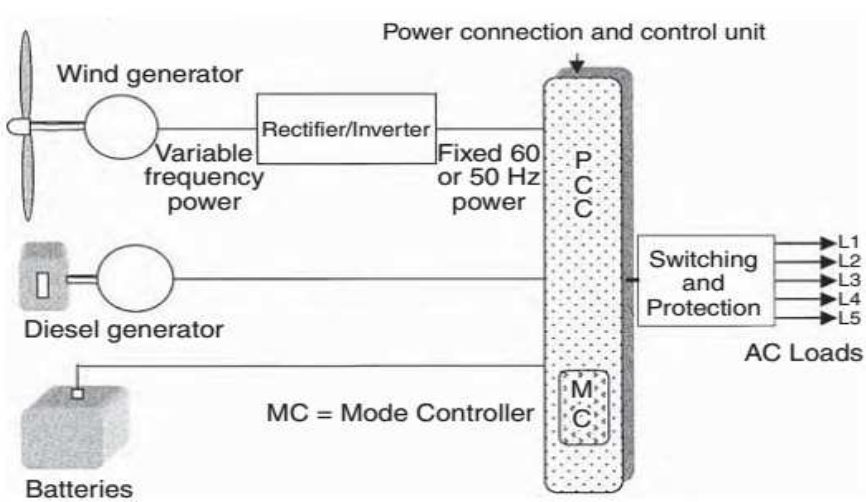

Wind–diesel–battery hybrid system.

B. WIND FARM–GRID INTEGRATION

With restructuring and technological changes in the utility sector, electric utilities have begun to include wind farms and PV parks in their resource mix. The issues the power industry must deal with in integration of these new power sources are the following:

• Branch power flows and node voltages

• Protection scheme and its ratings

• Harmonic distortion and flicker

• Power system dynamics and dynamic stability

• Reactive power control and voltage control

• Frequency control and load dispatch from conventional generators

The first three have primarily local impacts, whereas the last three have broad grid-level impacts. In addressing these issues, however, there is an increased need for independent analysis of the technical and economic aspects. Projects funded by the National Renewable Laboratory's (NREL) National Wind Technology Center (NWTC) and its partners in the utility and wind industries developed new information on integration and valuation issues and the reliability of new wind turbine products.

The program output has become a catalyst in a national outreach effort (with invest or owned utilities, electric cooperatives, public power organizations, energy regulators, and consumers) encouraging the use of wind power in generation portfolios and the purchase of wind-generated power using market-based activities. Numerous reports are available on these issues that can be downloaded from the Internet.

As for modeling the system performance, different wind farms are connected to different kinds of utility grids. The NWTC studies the behavior of power systems under different conditions to identify grid stability and power quality factors that enter into the development of wind farms throughout the U.S. Again, numerous reports are available on these issues that can be downloaded from the Internet.

As for the planning models and operations, researchers are studying how multiple wind farms or multiple wind generators in one large farm can smooth out each other's output in a variable wind environment. Power output fluctuations are also being studied in the context of wind farm integration into utility grids. Hand and Madsen reports are just two examples of such studies.

Certification and standards are of equal importance when the country as a whole must deal with a new technology. The NREL/NWTC conducts a certification process and provides guidelines to help users prepare for certification. Underwriters Laboratory (UL) is NREL's partner in this process. NREL has developed checklists to help designers understand what the certification body is likely to be looking for in their documentation. These are the same checklists that NREL and UL would use when evaluating their design documentation. Sign-offs on these checklists are used as a report of compliance or resolution on each design issue. Also offered is a checklist to help users comply with the International Electro-technical Commission (IEC)'s requirements. NWTC has documented the general quality management, design evaluation, and testing procedures related to the certifications.

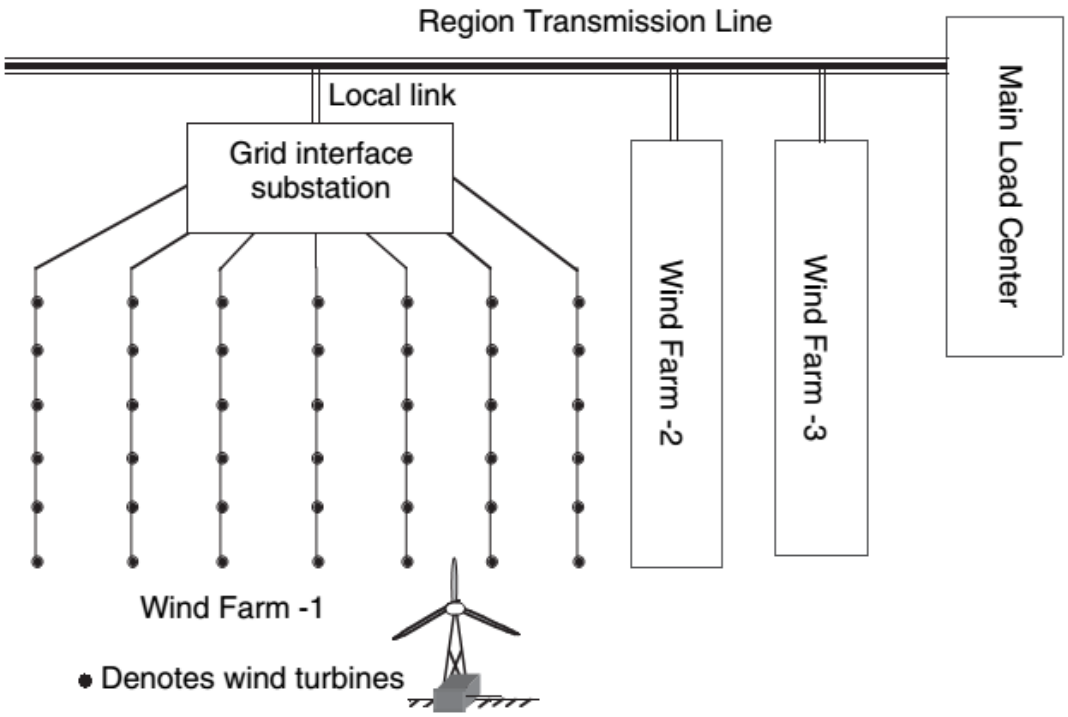

Distributed power generation with wind farms.

MODULE III

ENERGY STORAGE

Electricity is more versatile in use than other types of power, because it is a highly ordered form of energy that can be converted efficiently into other forms. For example, it can be converted into mechanical form with efficiency near 100% or into heat with 100% efficiency. Heat energy, on the other hand, cannot be converted into electricity with such high efficiency, because it is a disordered form of energy in atoms. For this reason, the overall thermal-to-electrical conversion efficiency of a typical fossil thermal power plant is less than 50%.

A disadvantage of electricity is that it cannot be easily stored on a large scale. Almost all electric energy used today is consumed as it is generated. This poses no hardship in conventional power plants, in which fuel consumption is continuously varied with the load requirement. Wind and photovoltaics (PVs), both being intermittent sources of power, cannot meet the load demand at all times, 24 h a day, 365 d a year. Energy storage, therefore, is a desired feature to incorporate with such power systems, particularly in stand-alone plants. It can significantly improve the load availability, a key requirement for any power system.

The present and future energy storage technologies that may be considered for stand-alone wind or PV power systems fall into the following broad categories:

• Electrochemical battery

• Flywheel

• Compressed air

• Superconducting coil

3.1 BATTERY

The battery stores energy in an electrochemical form and is the most widely used device for energy storage in a variety of applications. The electrochemical energy is in a semiordered form, which is in between the electrical and thermal forms. It has a one-way conversion efficiency of 85 to 90%.

There are two basic types of electrochemical batteries:

The primary battery, which converts chemical energy into electric energy.

The electrochemical reaction in a primary battery is nonreversible, and the battery is discarded after a full discharge. For this reason, it finds applications where a high energy density for one-time use is required.

The secondary battery, which is also known as the rechargeable battery. The electrochemical reaction in the secondary battery is reversible. After a discharge, it can be recharged by injecting a direct current from an external source. This type of battery converts chemical energy into electric energy

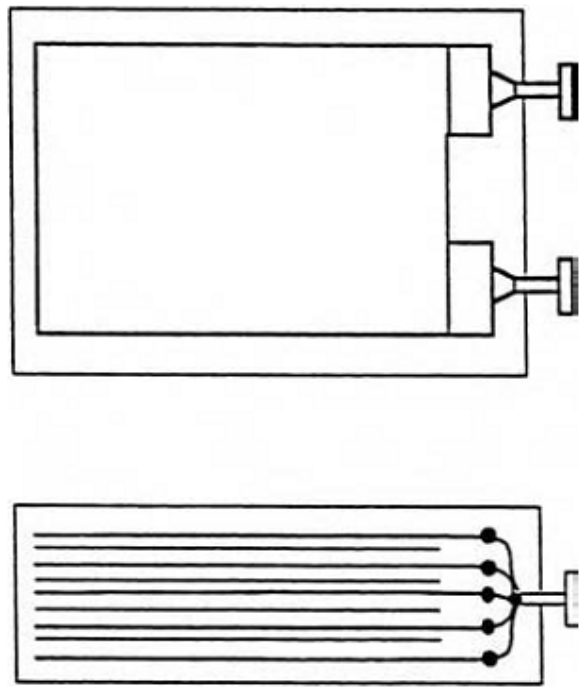

Electrochemical energy storage cell construction.

in the discharge mode. In the charge mode, it converts the electric energy into chemical energy. In both modes, a small fraction of energy is converted into heat, which is dissipated to the surrounding medium. The round-trip conversion efficiency is between 70 and 80%.

The internal construction of a typical electrochemical cell is shown in above Figure. It has positive and negative electrode plates with insulating separators and a chemical electrolyte in between. The two groups of electrode plates are connected to two external terminals mounted on the casing. The cell stores electrochemical energy at a low electrical potential, typically a few volts. The cell capacity, denoted by C, is measured in ampere-hours (Ah), meaning it can deliver C A for one hour or C/n A for n hours.

The battery is made of numerous electrochemical cells connected in a series–parallel combination to obtain the desired battery voltage and current. The higher the battery voltage, the higher the number of cells required in series. The battery rating is stated in terms of the average voltage during discharge and the ampere-hour capacity it can deliver before the voltage drops below the specified limit. The product of the voltage and ampere-hour forms the watthour (Wh) energy rating the battery can deliver to a load from

the fully charged condition. The battery charge and discharge rates are stated in units of its capacity in Ah. For example, charging a 100-Ah battery at C/10 rate means charging at 100/10 = 10 A. Discharging that battery at C/2 rate means drawing 100/2 = 50 A, at which rate the battery will be fully discharged in 2 h. The state of charge (SOC) of the battery at any time is defined as the following:

$$SOC = \frac{\text{Ah capacity remaning in the battery}}{\text{Rated Ah capacity}}$$

Average Cell Voltage during Discharge in Various Rechargeable Batteries

Electrochemistry	Cell Volts	Remark
Lead-acid	2.0	Least-cost technology
Nickel-cadmium	1.2	Exhibits memory effect
Nickel-metal hydride	1.2	Temperature sensitive
Lithium-ion	3.6	Safe, contains no metallic lithium
Lithium-polymer	3.0	Contains metallic lithium
Zinc-air	1.2	Requires good air management to limit self-discharge rate

3.2 TYPES OF BATTERY

There are at least six major rechargeable electro-chemistries available today. They are as follows:

• Lead-acid (Pb-acid)

• Nickel-cadmium (Ni-Cd)

• Nickel-metal hydride (Ni-MH)

• Lithium-ion (Li-ion)

• Lithium-polymer (Li-poly)

• Zinc-air

New electro-chemistries are being developed by the United States Advanced Battery Consortium for a variety of applications, such as electric vehicles, spacecraft, utility load leveling and, of course, for renewable power systems.

The average voltage during discharge depends on the electrochemistry, as shown in Table. The energy densities of various batteries, as measured by the Wh capacity per unit mass and unit volume, are compared in Figure. The selection of the electrochemistry for a given application is a matter of performance and cost optimization.

Some construction and operating features of these electro-chemistries are presented in the following sections.

3.2.1 LEAD-ACID

This is the most common type of rechargeable battery used today because of its maturity and high performance-over-cost ratio, even though it has the least energy density by weight and volume. In a Pb-acid battery under discharge, water and lead sulfate are formed, the water dilutes the sulfuric acid electrolyte, and the specific gravity of the electrolyte decreases with the decreasing SOC. Recharging reverses the reaction, in which the lead and lead dioxide are formed at the negative and positive plates, respectively, restoring the battery into its originally charged state.

The Pb-acid battery comes in various versions. The shallow-cycle version is used in automobiles, in which a short burst of energy is drawn from the battery to start the engine.

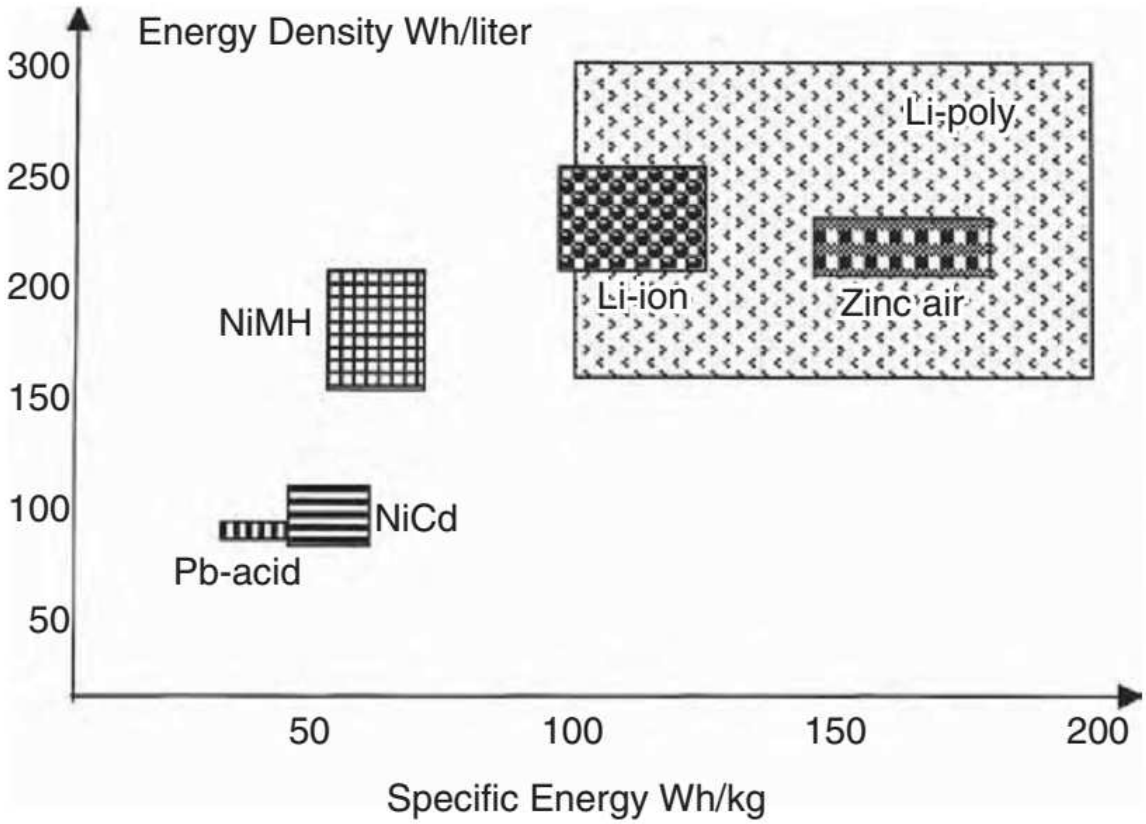

Specific energy and energy density of various electro-chemistries

The deep-cycle version, on the other hand, is suitable for repeated full charge and discharge cycles. Most energy storage applications require deep cycle batteries. The Pb-acid battery is also available in a sealed “gel-cell” version with additives, which turns the

electrolyte into non-spill able gel. The gel-cell battery, therefore, can be mounted sideways or upside down. The high cost, however, limits its use in military avionics.

3.2.2 NICKEL-CADMIUM

The NiCd is a matured electrochemistry, in which the positive electrode is made of cadmium and the negative electrode of nickel hydroxide. The two electrodes are separated by Nylon separators and placed in potassium hydroxide electrolyte in a stainless steel casing. With a sealed cell and half the weight of the conventional Pb-acid, the NiCd battery has been used to power most rechargeable consumer applications. It has a longer deep-cycle life and is more temperature tolerant than the Pb-acid battery. However, this electrochemistry has a memory effect (explained later), which degrades the capacity if not used for a long time. Moreover, cadmium has recently come under environmental regulatory scrutiny. For these reasons, NiCd is being replaced by NiMH and Li-ion batteries in laptop computers and other similar high-priced consumer electronics.

3.2.3 NICKEL-METALHYDRIDE

NiMH is an extension of the NiCd technology and offers an improvement in energy density over that in NiCd. The major construction difference is that the anode is made of a metal hydride. This eliminates the environmental concerns of cadmium. Another performance improvement is that it has a negligible memory effect. NiMH, however, is less capable of delivering high peak power, has a high self-discharge rate, and is susceptible to damage due to overcharging. Compared to NiCd, NiMH is expensive at present, although the price is expected to drop significantly in the future. This expectation is based on current development programs targeted for largescale application of this technology in electric vehicles.

3.2.4 LITHIUM-ION

The Li-ion technology is a new development, which offers three times the energy density over that of Pb-acid. Such a large improvement in energy density comes from lithium's low atomic weight of 6.9 vs. 207 for lead. Moreover, Li-ion has a higher cell voltage, 3.5 V vs. 2.0 V for Pb-acid and 1.2 V for other electro-chemistries. This requires fewer cells in series for a given battery voltage, thus reducing the manufacturing cost.

On the negative side, the lithium electrode reacts with any liquid electrolyte, creating a sort of passivation film. Every time the cell is discharged and then charged, the lithium is stripped away, a free metal surface is exposed to the electrolyte, and a new film is formed. This is compensated for by using thick electrodes or else the battery life would be shortened. For this reason, Li-ion is more expensive than Ni-Cd.

In operation, the Li-ion electrochemistry is vulnerable to damage from overcharging or other shortcomings in battery management. Therefore, it requires more elaborate charging circuitry with adequate protection against overcharging.

3.2.5 LITHIUM-POLYMER

This is a lithium battery with solid polymer electrolytes. It is constructed with a film of metallic lithium bonded to a thin layer of solid polymer electrolyte. The solid polymer enhances the cell's specific energy by acting as both the electrolyte and the separator. Moreover, the metal in solid electrolyte reacts less than it does with a liquid electrolyte.

3.2.6 ZINC-AIR

The zinc-air battery has a zinc negative electrode, a potassium hydroxide electrolyte, and a carbon positive electrode, which is exposed to the air. During discharge, oxygen from the air is reduced at the carbon electrode (the so-called air cathode), and the zinc electrode is oxidized. During discharge, it absorbs oxygen from the air and converts it into oxygen ions for transport to the zinc anode. During charge, it evolves oxygen. Good air management is essential for the performance of the zinc-air battery.

3.3 EQUIVALENT ELECTRICAL CIRCUIT

For steady-state electrical performance calculations, the battery is represented by an equivalent electrical circuit shown in Figure 10.3. In its simplest form, the battery works as a constant voltage source with a small internal resistance. The open-circuit (or electrochemical) voltage E_i of the battery decreases linearly with the Ah discharged (Q_d), and the internal resistance R_i increases linearly with Q_d. That is, the battery open-circuit voltage is lower, and

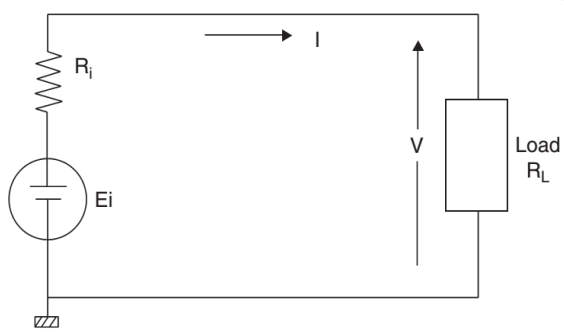

Equivalent electrical circuit of the battery showing internal voltage and resistance.

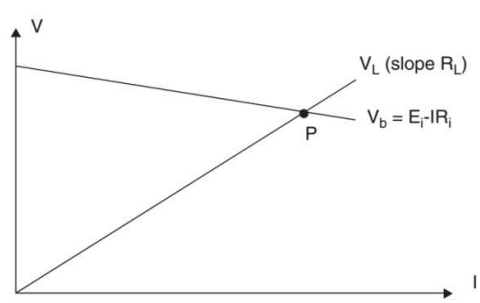

Battery source line intersecting with load line at the operating point.

the internal resistance is higher in a partially discharged state as compared to the E_0 and R_0 values in a fully charged state. These parameters are expressed quantitatively as follows:

$$E_i = E_0 - K_1 Q_d \;, \quad R_i = R_0 + K_2 Q_d \qquad (1)$$

where K_1 and K_2 are constants found by curve-fitting the test data.

The terminal voltage drops with increasing load as shown by the V_b line in Figure, in which the operating point is the intersection of the source line and the load line (point P). The power delivered to the external load resistance is I^2R_L.

In a fast-discharge application, such as for starting a heavily loaded motor, the battery may be required to deliver the maximum possible power for a short time. The peak power it can deliver is derived using the maximum power transfer theorem in electrical circuits. It states that the maximum power can be transferred from the source to the load when the internal impedance of the source equals the conjugate of the load impedance. The battery can deliver the maximum power to a DC load when $R_L = R_i$. This gives the following:

$$P_{max} = \frac{E_i^{\,2}}{4R_i} \qquad (2)$$

Because E_i and R_i vary with the SOC, the P_{max} also varies accordingly. The internal loss is I
$2R_i$. The efficiency at any SOC is therefore:

$$\eta = \frac{R_L}{R_L + R_i} \qquad (3)$$

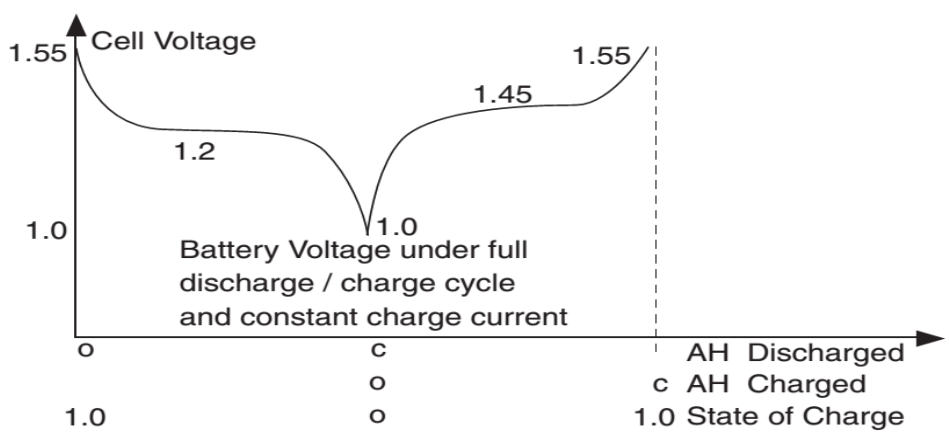

Voltage variation during C/D cycle of Ni-Cd cell with nominal voltage of 1.2 V

The efficiency decreases as the battery is discharged, thus generating more heat at a low SOC.

3.4 PERFORMANCE CHARACTERISTICS

The basic performance characteristics, which influence the battery design, are as follows:

• Charge/discharge (C/D) voltages

• C/D ratio

• Round-trip energy efficiency

• Charge efficiency

• Internal impedance

• Temperature rise

• Life in number of C/D cycles

3.4.1 C/D VOLTAGES

The cell voltage variation during a typical C/D cycle is shown in Figure 10.5 for a cell with nominal voltage of 1.2 V, such as Ni-MH and Ni-Cd. The voltage is maximum when the cell is fully charged (SOC = 1.0 or Ah discharged = 0). As the cell is discharged, the cell voltage (Vc) drops quickly to a plateau value of 1.2 V, which holds for a long time before dropping to 1.0 at the end of capacity (SOC = 0). In the reverse, when the cell is recharged, the voltage quickly rises to a plateau value of 1.45 V and then reaches a maximum value of 1.55 V. The C/D characteristic also depends on how fast the battery is charged and discharged.

3.4.2 C/D RATIO

After discharging a certain Ah to load, the battery requires more Ah of charge to restore the full SOC. The C/D ratio is defined as the Ah input over the Ah output with no net change in the SOC. This ratio depends on the charge and discharge rates and also on temperature, as shown in Figure 10.7. At 20°C, for example, the C/D ratio is 1.1, meaning the battery needs 10% more Ah charge than that which was discharged for restoring to its fully charged state.

4.3 ENERGYEFFICIENCY

The energy efficiency over a round trip of a full charge and discharge cycle is defined as the ratio of the energy output over the energy input at the electrical terminals of the battery. For a typical battery of capacity C with an average discharge voltage of 1.2 V,

average charge voltage of 1.45 V, and C/D ratio of 1.1, the efficiency is calculated as follows:

The energy output over the full discharge = 1.2 × C

The energy input required to restore full charge = 1.45 × 1.1 × C

Therefore, the round-trip energy efficiency is as follows:

$$\eta_{\text{energy}} = \frac{1.2 \times C}{1.45 \times 1.1 \times C} = 0.75 \text{ or } 75\%$$

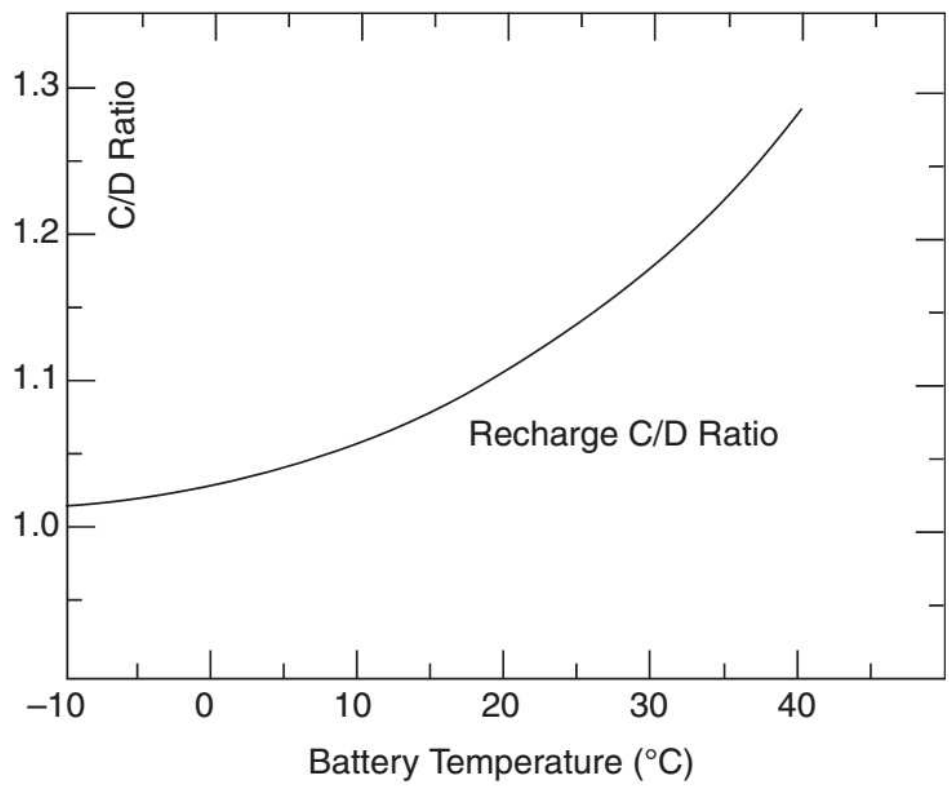

Temperature effect on C/D ratio.

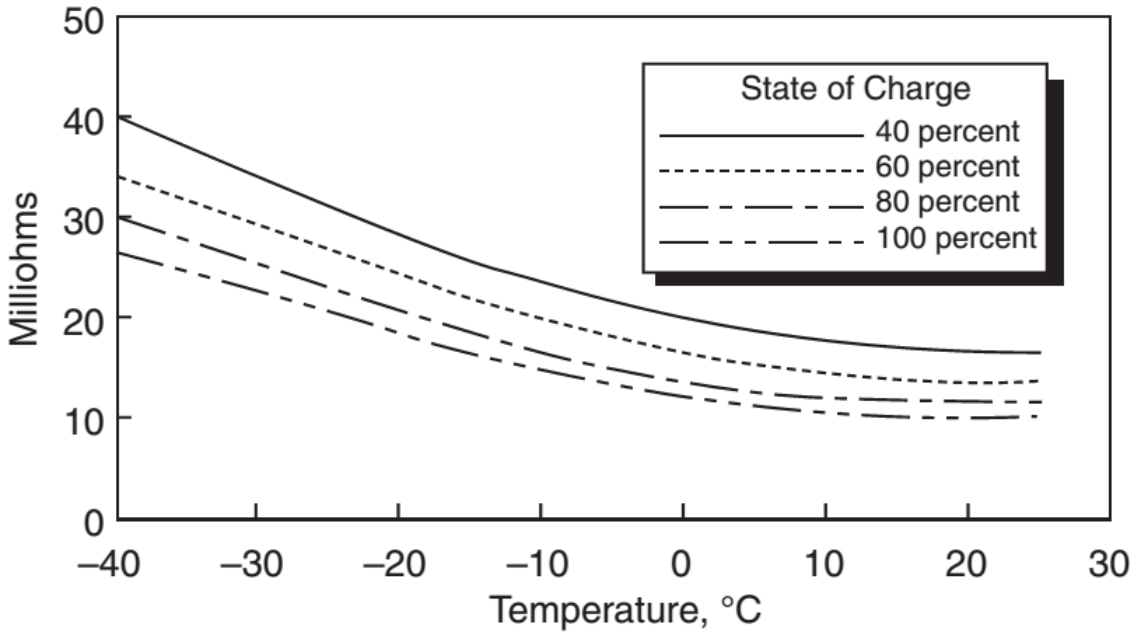

Temperature effect on internal resistance in 25-Ah NiCd cell.

3.4.4 INTERNALRESISTANCE

The efficiency calculations in the preceding text indicate that 25% of the energy is lost per C/D cycle, which is converted into heat. This characteristic of the battery can be seen as having an internal resistance R_i. The value of R_i is a function of the battery capacity, operating temperature, and the SOC. The higher the cell capacity, the larger the electrodes and the lower the internal resistance. R_i varies with SOC as per Equation 1. It also varies with temperature as shown in Figure 10.8, which is for a high-quality 25-Ah NiCd cell.

3.4.5 CHARGEE FFICIENCY

Charge efficiency is defined as the ratio of the Ah being deposited internally between the plates over that delivered to the external terminals during the charging process. It is different from energy efficiency. The charge efficiency is almost 100% when the cell is empty of charge, the condition in which it converts all Ah received into useful electrochemical energy. As the SOC approaches one, the charge efficiency tapers down to zero. The knee point at which the charge efficiency starts tapering off depends on the charge rate. For example, at C/2 charge rate, the charge efficiency is 100% up to about 75% SOC. At a fast charge rate of C/40, on the other hand, the charge efficiency at 60% SOC is only 50%.

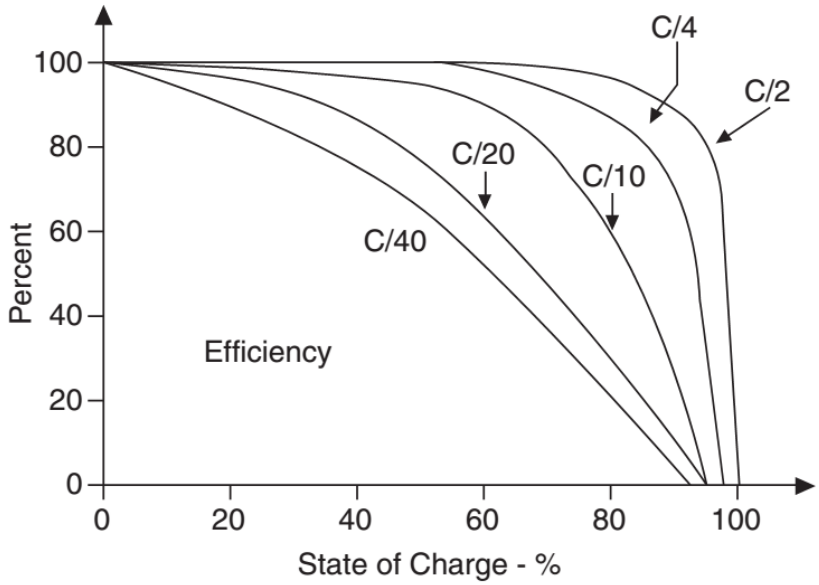

Charge efficiency vs. SOC at various charge rates.

3.4.6 SELF-DISCHARGE ANDTRICKLE-CHARGE

The battery slowly self-discharges even with no load on its terminals (open circuit). To maintain full SOC, it is continuously trickle-charged to counter the self-discharge rate. This rate is usually less than 1% per day for most electrochemistries in normal working conditions. After the battery is fully charged, the charge efficiency drops to zero. Any additional charge will be converted into heat. If overcharged at a higher rate than the self-discharge rate for an extended period of time, the battery would overheat, posing a safety hazard of potential explosion. Excessive overcharging produces excessive gassing, which scrubs the electrode plates. Continuous scrubbing at high rate produces excessive heat and wears out electrodes, leading to shortened life. For this reason, the battery charger should have a regulator to cut back the charge rate to the trickle rate after the battery is fully charged. Trickle charging produces a controlled amount of internal gassing. It causes mixing action of the battery electrolyte, keeping it ready to deliver the full charge.

3.4.7 MEMORY EFFECT

One major disadvantage of the Ni-Cd battery is the memory effect. It is the tendency of the battery to remember the depth at which it has delivered most of its capacity in the past. For example, if the Ni-Cd battery is repeatedly charged and discharged 25% of its capacity to point M in Figure 10.10, it will remember point M. Subsequently, if the

battery is discharged beyond point M, the cell voltage will drop much below its original normal value shown by the dotted line in Figure. The end result is the loss of full capacity after repeatedly using many shallow discharge cycles. The phenomenon is like losing a muscle due to lack of use over a long time. A remedy for restoring the full capacity is "reconditioning," in which the battery is fully discharged to almost zero voltage once every few months and then fully charged to about 1.55 V per cell. Other types of batteries do not have this memory effect.

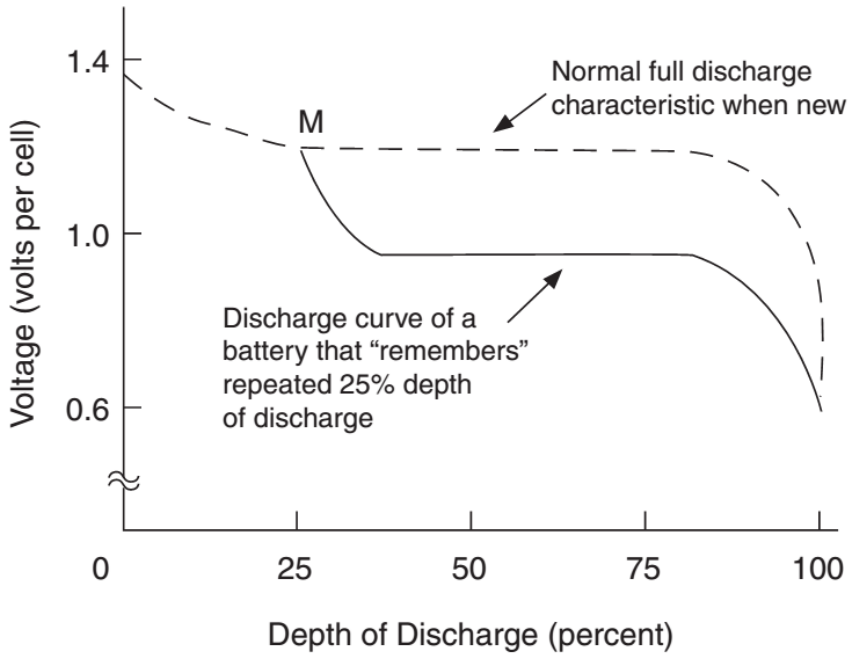

Memory effect degrades discharge voltage in Ni-Cd cell.

3.4.8 EFFECTS OFTEMPERATURE

As seen in the preceding sections, the operating temperature significantly influences the battery performance as follows:

• The capacity and charge efficiency decrease with increasing temperature.

• The capacity drops at temperatures above or below a certain range, and drops sharply at temperatures below freezing.

• The self-discharge rate increases with temperature.

• The internal resistance increases with decreasing temperature.

Table below shows the influence of temperature on the charge efficiency, discharge efficiency, and self-discharge rate in the NiCd battery. The process of determining the optimum operating temperature is also indicated in the table. It is seen that different

attributes have different desirable operating temperature ranges shown by the boldfaced numbers. With all attributes jointly considered, the most optimum operating temperature is the intersection of all the desirable ranges. For example, if we wish to limit the self-discharge rate below 1%, discharge efficiency at 100%, and charge efficiency at 90% or higher, Table 10.2 indicates that the optimum working-temperature range is between 10°C and 25°C, which is the common belt through the boldfaced parts of the three columns.

Optimum Working-Temperature Range for NiCd Battery

Operating Temperature (°C)	Charge Efficiency (%)	Discharge Efficiency (%)	Self-Discharge Rate (% Capacity/Day)
–40	0	72	0.1
–35	0	80	0.1
–30	15	85	0.1
–25	40	90	0.2
–20	75	95	0.2
–15	85	97	0.2
–10	**90**	**100**	**0.2**
–5	**92**	**100**	**0.2**
0	**93**	**100**	**0.2**
5	**94**	**100**	**0.2**
10	**94**	**100**	**0.2**
15	**94**	**100**	**0.3**
20	**93**	**100**	**0.4**
25	**92**	**100**	**0.6**
30	91	100	1.0
35	90	100	1.4
40	88	100	2.0
45	85	100	2.7
50	82	100	3.6
55	79	100	5.1
60	75	100	8.0
65	70	100	12
70	60	100	20

3.4.9 INTERNALLOSS ANDTEMPERATURERISE

The battery temperature varies over the C/D cycle. Taking NiCd as an example, the heat generated in one such cycle with 1.2 h of discharge and 20.8 h of charge every day is shown in Figure 10.11. Note that the heat generation increases with the depth of discharge (DoD) because of the increased internal resistance at higher DoD. When the battery is put to charge, the heat generation is negative for a while, meaning that the electrochemical reaction during the initial charging period is endothermic (absorbing heat), as opposed to the exothermic reaction during other periods with a positive heat generation. The temperature rise during the cycle depends on the cooling method used to dissipate the heat by conduction, convection, and radiation.

Different electro-chemistries, however, generate internal heat at different rates. The heat generation of various batteries can be meaningfully compared in terms of the adiabatic temperature rise during discharge, which is given by the following relation:

$$\Delta T = \frac{WH_d}{MC_p}\left[1 - \eta_v + \frac{E_d}{E_o}\right] \quad (4)$$

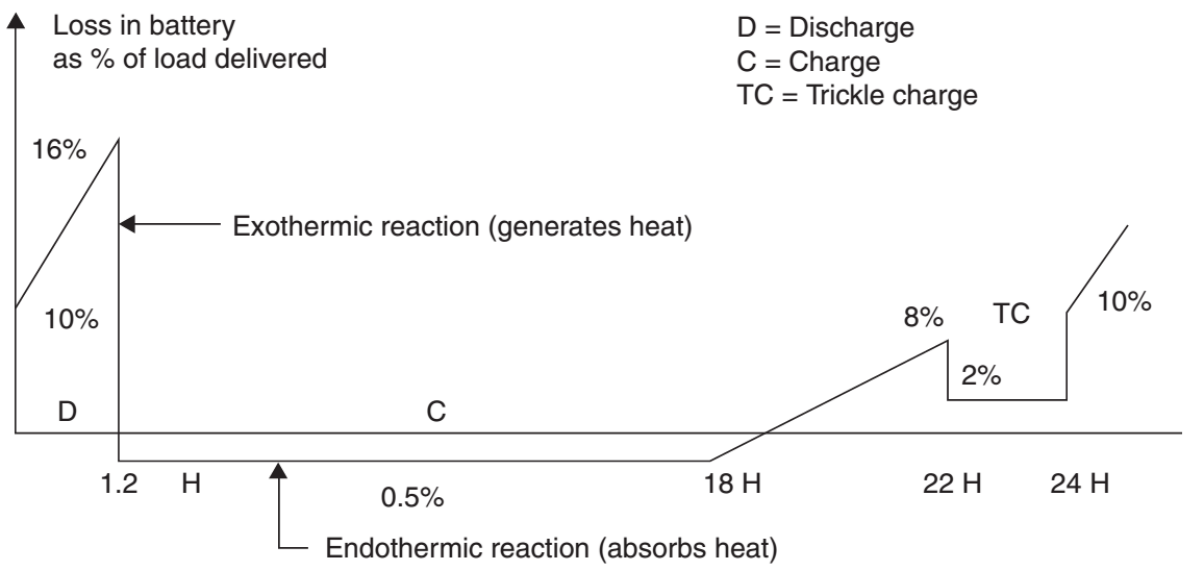

Internal energy loss in battery during C/D cycle showing endothermic and exothermic periods.

where

ΔT = adiabatic temperature rise of the battery, °C

WH_d = watthour energy discharged, Wh

M = mass of the battery, kg

C_p = battery-specific heat, Wh/kg·C

η_v = voltage efficiency factor on discharge

E_d = average cell entropy energy per coulomb during discharge, i.e., average power loss per ampere of discharge, W/A

E_o = average cell open-circuit voltage,

Battery Characteristics Affecting Thermal Design

Electrochemistry	Operating Temperature Range (°C)	Overcharge Tolerance	Heat Capacity (Wh/kg-K)	Mass Density (kg/l)	Entropic Heating on Discharge W/A
Lead-acid	–10 to 50	High	0.35	2.1	–0.06
Nickel-cadmium	–20 to 50	Medium	0.35	1.7	0.12
Nickel-metal hydride	–10 to 50	Low	0.35	2.3	0.07
Lithium-ion	10 to 45	Very low	0.38	1.35	0
Lithium-polymer	50 to 70	Very low	0.40	1.3	0

For full discharge, the WH_d/M ratio in Equation 10.4 becomes the specific energy. This indicates that a higher specific energy cell would also tend to have a higher temperature rise during discharge, requiring an enhanced cooling design. Various battery characteristics affecting the thermal design are listed in above Table. Figure depicts the adiabatic temperature rise ΔT for various electro-chemistries after a full discharge in short bursts.

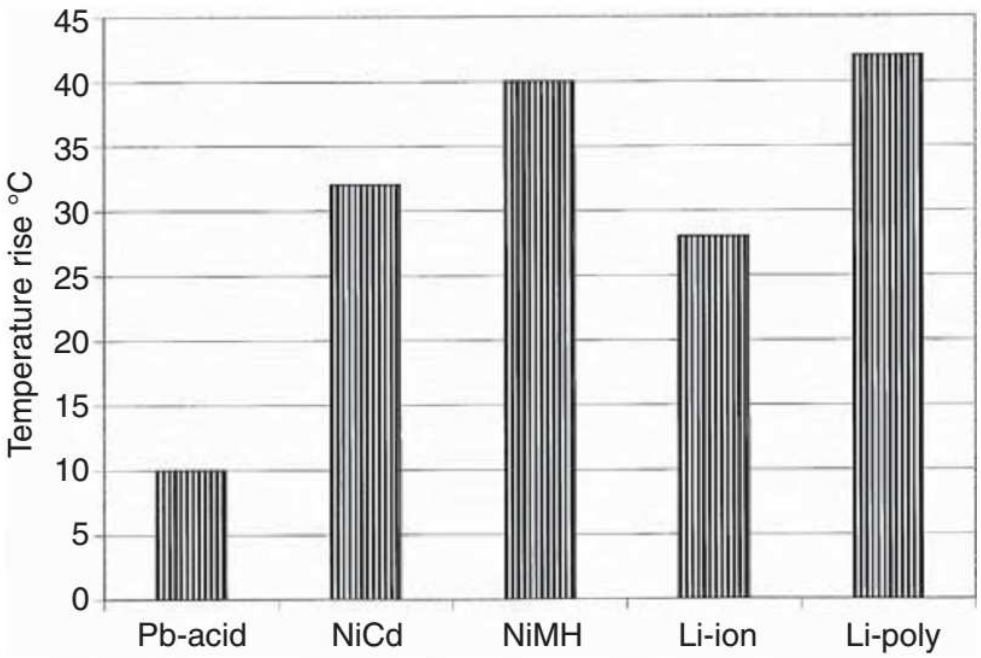

Adiabatic temperature rise for various electro-chemistries.

3.4.10 RANDOM FAILURE

The battery fails when at least one cell in a series fails. Cell failure is theoretically defined as the condition in which the cell voltage drops below a certain value before discharging the rated capacity at room temperature. The value is generally taken as 1.0 V in cells with nominal voltage of 1.2 V. This is a very conservative definition of battery failure. In practice, if one cell shows less than 1.0 V, other cells can make up the difference without detecting the failure at the battery level. Even if all cells show stable voltage below 1.0 V at full load, the load can be reduced to maintain the desired voltage for some time until the voltage degrades further.

The cell can fail in open, short, or be in some intermediate state (a soft short). A short that starts soft eventually develops into a hard short. In a low-voltage battery, any attempt to charge with a shorted cell may result in physical damage to the battery or the charge regulator. On the other hand, the shorted cell in a high-voltage battery with numerous series-connected cells may work forever. It, however, loses the voltage and ampere-hour capacity, and hence, would work as a load on the healthy cells. An open cell, on the other hand, disables the entire battery of series-connected cells.

In a system having two parallel batteries (a common design practice), if one cell in one battery gets shorted, the two batteries would have different terminal characteristics. Charging or discharging such batteries as a group can result in highly uneven current sharing, subsequently is overheating one of the batteries. Two remedies are available to

avoid this. One is to charge and discharge both batteries with individual current controls such that they both draw their rated share of the load. The other is to replace the failed cell immediately, which can sometimes be impractical.

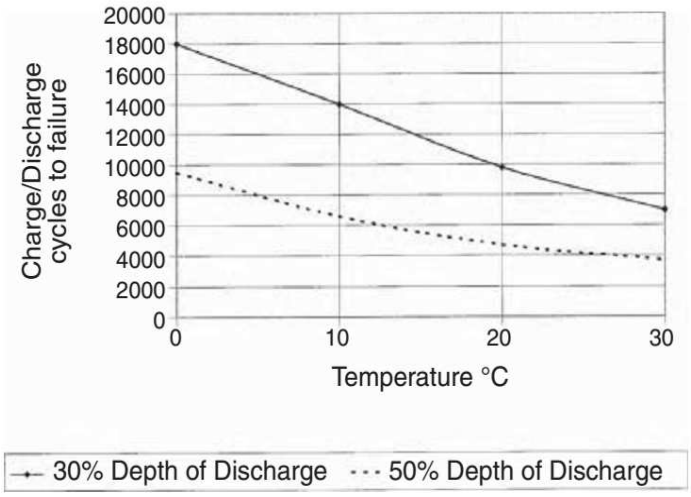

C/D cycle life of sealed NiCd battery vs. temperature and DoD

In general, an individual C/D control for each battery is the best strategy. It may also allow replacement of any one battery with a different electrochemistry or different age, which would have different load-sharing characteristics. Batteries are usually replaced several times during the economic life of a plant.

3.5 BATTERY DESIGN

The battery design for a given application depends on the following system requirements:

• Voltage and current

• C/D and duration

• Operating temperature during C/D

• Life in number of C/D cycles

• Cost, size, and weight constraints

Once these system-level design parameters are identified, the battery design proceeds in the following steps:

1. Select the electrochemistry suitable for the overall system requirements.

2. Determine the number of series cells required to meet the voltage requirement.

3. Determine the ampere-hour discharge required to meet the load demand.

4. For the required number of C/D cycles, determine the maximum allowable DoD.

5. Ampere-hour capacity of the battery is then determined by dividing the ampere-hour discharge required by the allowable DoD calculated earlier.

6. Determine the number of battery packs required in parallel for the total ampere-hour capacity.

7. Determine the temperature rise and thermal controls required.

8. Provide the C/D rate controls as needed.

Each cell in the battery pack is electrically insulated from the others and from the ground. The electrical insulation must be a good conductor of heat to maintain a low temperature gradient between the cells and also to the ground.

The battery performs better under slow C/D rates. It accepts less energy when charged at a faster rate. Also, the faster the discharge rate, the faster the voltage degradation and lower the available capacity to the load. For these reasons, high C/D-rate applications require different design considerations from the low-rate applications.

Because the battery design is highly modular, built from numerous cells, there is no fundamental technological limitation on the size of the energy storage system that can be designed and operated using electrochemical batteries. The world's largest 40-MW peak-power battery was commissioned in 2003 at a cost of $30 million. The system used 14,000 sealed NiCd cells manufactured from recycled cadmium by Saft Corporation at a total cell cost of $10 million. The cells will be recycled again after their 20-yr life. The battery system is operated by Golden Valley Electric Association in Fairbanks for an Alaskan utility company. The spinning energy reserve of the battery provides continuous voltage support and cuts down on blackout possibilities.

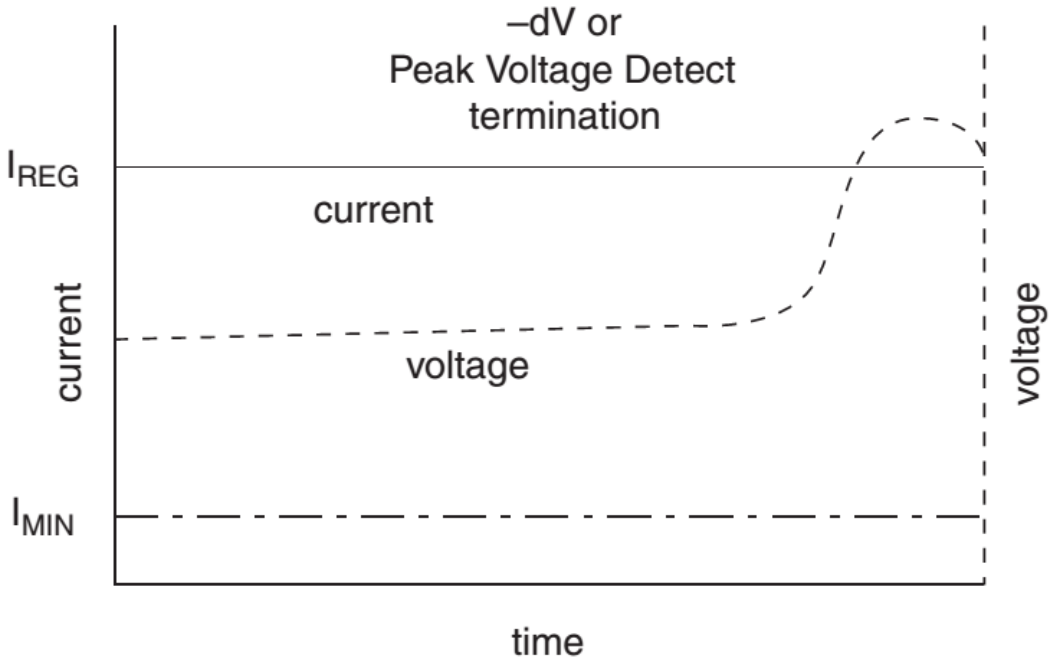

Constant current charging of NiCd and NiMH batteries.

3.6 BATTERY CHARGING

During battery charging, the energy management software monitors the SOC, the overall health, and safe termination criteria. The continuously monitored operating parameters are the battery voltage, current, and temperature. The charging timer is started after all initial checks are successfully completed. Charging may be suspended (but not reset) if it detects any violation of critical safety criteria. The timer stops charging if the defect persists beyond a certain time limit.

Normal charging has the following three phases:

• Bulk (fast) charge, which deposits 80 to 90% of the drained capacity

• Taper charge, in which the charge rate is gradually cut back to top off the remaining capacity

• Trickle (float) charge after the battery is fully charged to counter the self-discharge rate

The bulk-charge and the taper-charge termination criteria are preloaded in the battery management software to match the battery electrochemistry and system design parameters. For example, the NiCd and NiMH batteries are generally charged at a constant current (Figure 10.18), terminating the charging when the continuously

monitored ΔV is detected negative. On the other hand, the Li-ion battery, being sensitive to overcharging, is charged at a constant voltage, tapering off the charge current as needed.

3.7 CHARGE REGULATORS

For safety reasons, it is extremely important that excessive charging of the battery be avoided at all times. Overcharging causes internal gassing, which causes loss of water in the Pb-acid battery and premature aging. The charge regulator allows the maximum rate of charging until the gassing starts. Then the charge current is tapered off to the trickle-charge rate so that the full charge is approached gently.

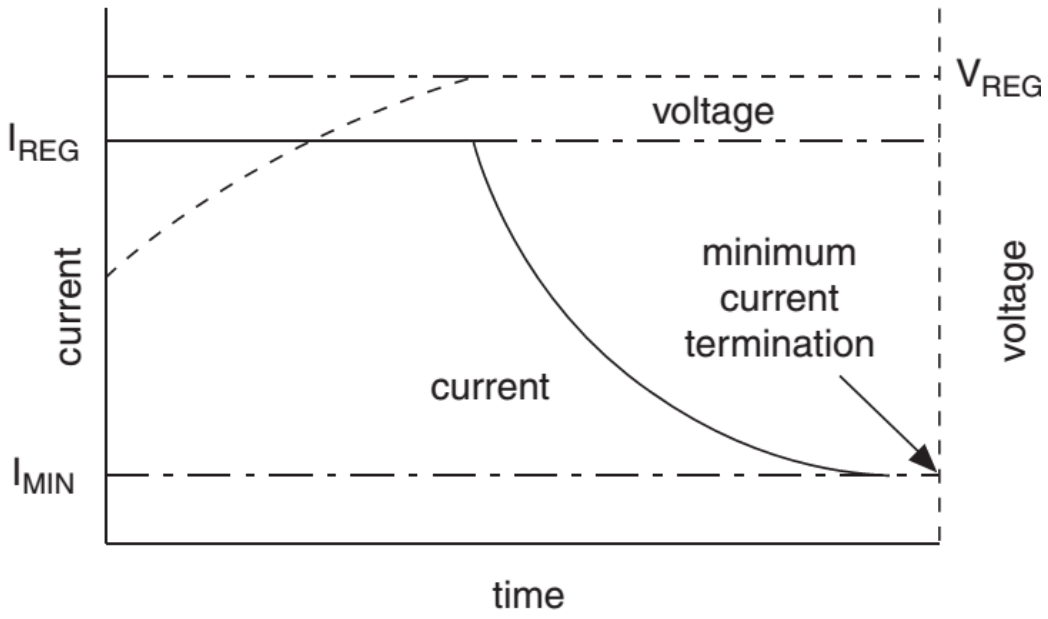

Constant voltage charging of Li-ion battery.

The batteries are charged in the following three different manners:

3.7.1 MULTIPLECHARGERATES

This is the best method, in which the battery is charged gently in multiple steps. First the battery is charged at a full charge rate until 80 to 90% of the capacity is achieved. The charge current is then cut back in steps until the battery is fully charged. At this time, the charge current is further reduced to a trickle-charge rate, keeping it fully charged until the

next load demand comes on the battery. This method, therefore, needs at least three charge rates in the charge regulator design.

3.7.2 SINGLE-CHARGERATE

This method uses a simple low-cost regulator, which is either on or off. The regulator is designed for only one charge rate. When the battery is fully charged, as measured by its terminal voltage, the charger is turned off by a relay. When the battery voltage drops below a preset value, the charger is again connected in full force. Because the charging is not gentle in this method, full charge is difficult to achieve and maintain.

An alternate version of this charging method is the multiple pulse charging. Full current charges the battery up to a high preset voltage just below the gassing threshold. At this time, the charger is shut off for a short time to allow the battery chemicals to mix and the voltage to fall. When the voltage falls below a low preset threshold, the charger is reconnected, again passing full current to the battery.

3.7.3 UNREGULATEDCHARGING

This least-cost method can be used in PV power systems. It uses no charge regulator. The battery is charged directly from a solar module dedicated just for charging. The charging module is properly designed for safe operation with a given number of cells in the battery. For example, in a 12-V Pb-acid battery, the maximum PV module voltage is kept below 15 V, making it impossible to overcharge the battery. When the battery is fully charged, the array is fully shunted to ground by a shorting switch (transistor). The shunt transistor switch is open when the battery voltage drops below a certain value.

3.8 BATTERY MANAGEMENT

Drawing electric power from the battery when needed, and charging it back when access power is available, requires a well-controlled charge and discharge process.

Otherwise, the battery performance could suffer, life could be shortened, and maintenance would increase. Some common performance problems are as follows:

• Low charge efficiency, resulting in low SOC

• Loss of capacity, disabling the battery to hold the rated ampere-hour charge

• Excessive gassing and heating, leading to a short life

• Unpredictable premature failure, leading to loss of load availability

• Positive plate corrosion, shortening the life

• Stratification and sulfation, degrading the performance

The following features incorporated into battery management can avoid the problems given in the preceding text:

• Controlled voltage charging, preferably at a constant voltage

• Temperature-compensated charging, in which the charge termination occurs earlier if the battery temperature is higher than the reference temperature

• Individual charge control if two or more batteries are charged in parallel

• Accurate set points to start and stop the charge and discharge modes

3.8.1 MONITORING ANDCONTROLS

The batteries in modern power systems are managed by dedicated computer software. The software monitors and controls the following performance parameters:

• Voltage and current

• Temperature and pressure (if applicable)

• Ampere-hour in and out of the battery

• SOC and discharge

• Rate of charge and discharge

• Depth of discharge

• Number of charge and discharge cycles

An ampere-hour-integrating meter is commercially available, which keeps track of the ampere-hour in and out of the battery and sends the required signals to the mode controller. The temperature-compensated maximum battery voltage and the SOC can improve battery management, particularly in extreme cold temperatures. It can allow an additional charging during cold periods when the battery can accept more charge.

The low-voltage alarm is a good feature to have, as discharging below the threshold low voltage can cause a cell voltage to reverse (become negative). The negative voltage of the cell makes it a load, leading to overheating and a premature failure.

The alarm can be used to shed noncritical loads from the battery to avoid potential damage.

3.8.2 SAFETY

The battery operation requires certain safety considerations. The most important is not to overcharge the battery. Any overcharge above the trickle-charge rate is converted into heat, which, if beyond a certain limit, can cause the battery to explode.

This is particularly critical when the battery is charged directly from a PV module without a charge regulator. In such a case, the array is sized below a certain safe limit. As a rule of thumb, the PV array rating is kept below the continuous overcharge current that can be tolerated by the battery. This is typically below C/15 A for Pb acid batteries.

3.9 FLYWHEEL

The flywheel stores kinetic energy in a rotating inertia. This energy can be converted from and to electricity with high efficiency. The flywheel energy storage is an old concept, which has now become commercially viable due to advances made in high strength, lightweight fiber composite rotors, and the magnetic bearings that operate at high speeds. The flywheel energy storage system is being developed for a variety of potential applications, and is expected to make significant inroads in the near future. The round-trip conversion efficiency of a large flywheel system can approach 90%, much higher than that of a battery.

The energy storage in a flywheel is limited by the mechanical stresses due to the centrifugal forces at high speeds. Small- to medium-sized flywheels have been in use for years. Considerable development efforts are underway around the world for high-speed flywheels to store large amounts of energy. The present goal of these developments is to achieve five times the energy density of the currently available secondary batteries. This goal is achievable with the following enabling technologies, which are already in place in their component forms:

• High-strength fibers having ultimate tensile strength of over one million pounds per square inch

• Advances made in designing and manufacturing fiber-epoxy composites

• High-speed magnetic bearings, which eliminate friction, vibrations, and noise

The flywheel system is made of a fiber-epoxy composite rotor, supported on magnetic bearings, rotating in a vacuum, and mechanically coupled with an electrical machine that can work as a motor or a generator. Two counter-rotating wheels are placed side by side where gyroscopic effects must be eliminated, such as in a city transit bus, train, or an automobile.

3.9.1 ENERGYRELATIONS

The energy stored in a flywheel having the moment of inertia J and rotating at an angular speed ω is given by the following:

$$E = \frac{1}{2} J\omega^2 \tag{5}$$

The centrifugal force in the rotor material of density ρ at radius r is given by $\rho(r\omega)^2$, which is supported by the hoop stress in the rotor rim. Because the linear velocity $V = 2\pi r\omega$, the maximum centrifugal stress in the rotor is proportional to the square of the outer tip velocity. The allowable stress in the material places an upper limit on the rotor tip speed. Therefore, a smaller rotor can run at a high speed and vice versa. The thin-rim-type rotor has a high inertia-to-weight ratio and stores more energy per kilogram weight. For this reason, the rotor, in all practical flywheel system designs, is a thin-rim configuration. For such a rotor with inner radius R_1 and outer radius R_2, it can be shown that the maximum energy that can be stored for an allowable rotor tip velocity V is as follows:

$$E_{max} = K_1 V^2 \left[1 + \left(\frac{R_1}{R_2} \right)^2 \right] \tag{6}$$

where

K_1 is the proportionality constant. The thin-rim flywheel with R_1/R_2 ratio approaching unity results in a high specific energy for a given allowable stress limit.

The higher the ultimate strength of the material, the higher the specific energy. The lower the material density, the lower the centrifugal stress produced, which leads to a higher allowable speed and specific energy. The maximum energy storage E_{max}, therefore, can be expressed as follows:

$$E_{max} = K_2 \frac{\sigma_{max}}{\rho} \tag{7}$$

where

K_2= another proportionality constant

σ_{max}= maximum allowable hoop stress

ρ = density of the rotor material

A good flywheel design therefore has a high σ_{max}/ρ ratio for high specific energy. It also has a high E/ρ ratio for rigidity, where E is the Young's modulus of elasticity. The metallic flywheel has low specific energy because of a low σ_{max}/ρ ratio, whereas high-strength polymer fibers such as graphite, silica, and boron, having much higher $\sigma max/\rho$ ratio, store an order of magnitude higher energy per unit weight.

Table compares the specific energy of various metallic and polymer fiber composite rotors. In addition to a high specific energy, the composite rotor has a safe mode of failure, as it disintegrates to fluff rather than fragmenting like the metal flywheel.

Figure shows a rotor design recently developed at the Oakridge National Laboratory. The fiber-epoxy composite rim is made of two rings. The outer ring is made of high-strength graphite, and the inner ring of low-cost glass fiber. The hub is made of single-piece aluminum in the radial spoke form. Such a construction is cost-effective because it uses the costly material only where it is needed for strength, that is, in the outer ring where the centrifugal force is high, resulting in a high hoop stress.

Maximum Specific Energy Storable in a Thin-Rim Flywheel with Various Rim Materials

Rotor Wheel Material	Maximum Specific Energy Storable (Wh/kg)
Aluminum alloy	25
Maraging steel	50
E-glass composite	200
Carbon fiber composite	220
S-glass composite	250
Polymer fiber composite	350
Fused silica fiber composite	1000
Lead-acid battery	30–40
Lithium-ion battery	90–120

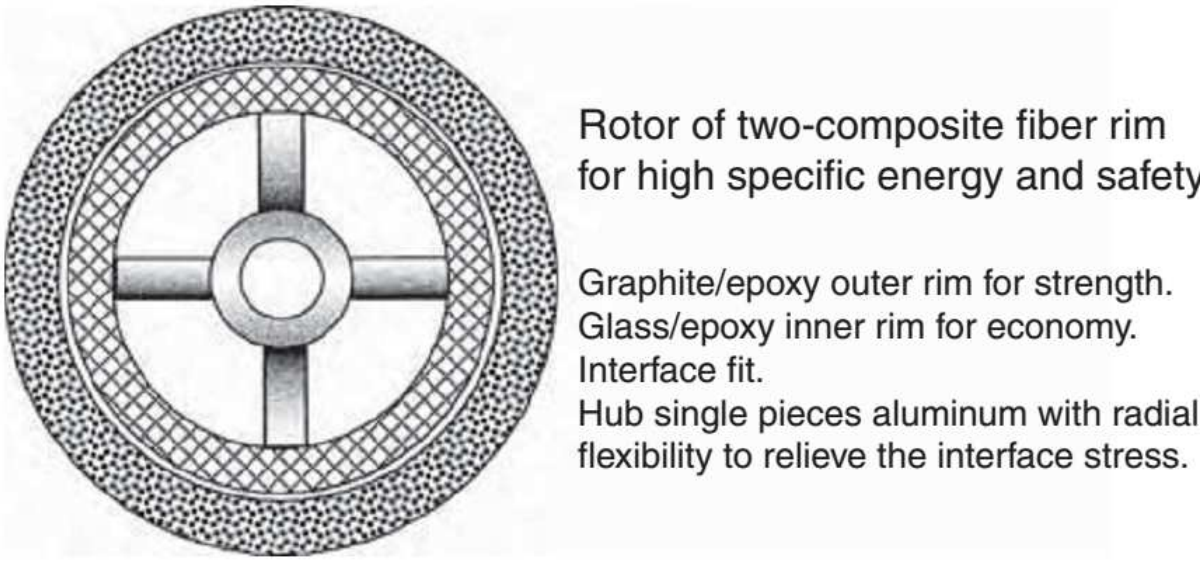

Flywheel rotor design using two composite rings. (Adapted from the DOE/Oakridge National Laboratory's prototype design.)

3.9.2 FLYWHEEL SYSTEM COMPONENTS

The complete flywheel energy storage system requires the following components:

• High-speed rotor attached to the shaft via a strong hub

• Bearings with good lubrication system or with magnetic suspension in high-speed rotors

• Electromechanical energy converter, usually a machine that can work as a motor during charging and as a generator while discharging the energy

• Power electronics to drive the motor and to condition the generator power

• Control electronics for controlling the magnetic bearings and other functions

Good bearings have low friction and vibration. Conventional bearings are used up to speeds in a few tens of thousands rpm. Speeds approaching 100,000 rpm are possible only by using magnetic bearings, which support the rotor by magnetic repulsion and attraction. The mechanical contact is eliminated, thus eliminating friction. Running the rotor in a vacuum eliminates windage.

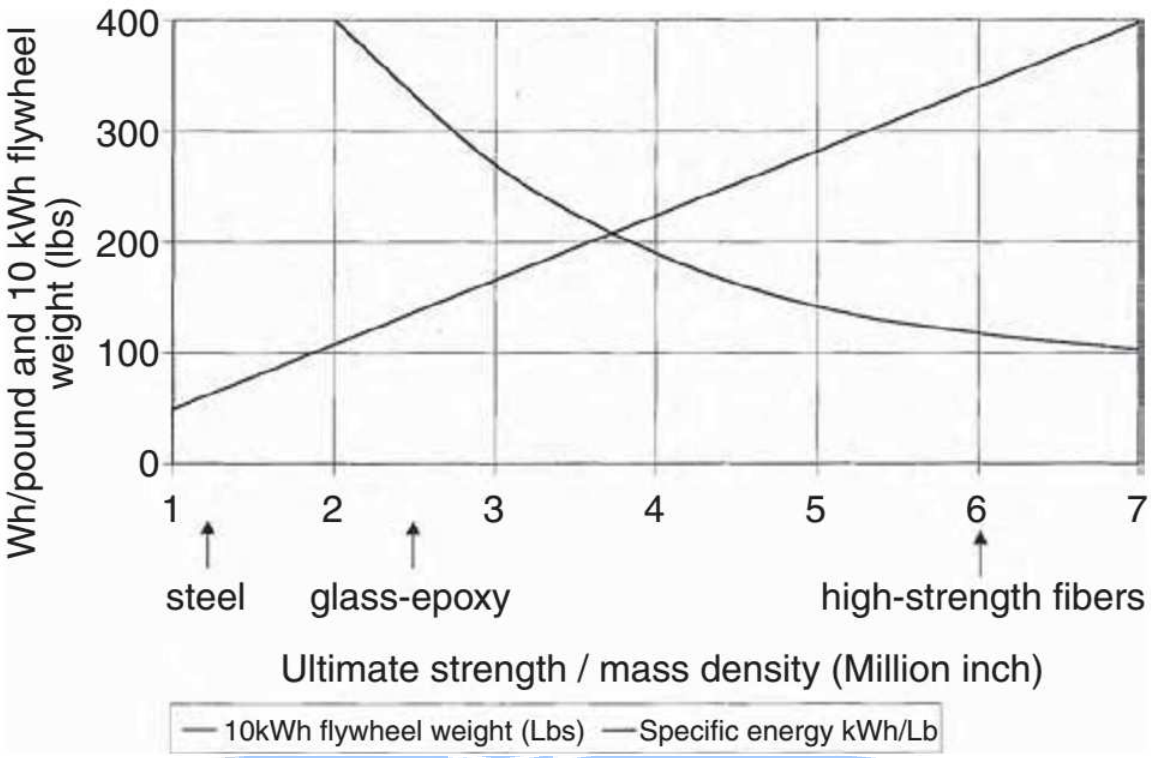

Specific energy vs. specific strength in flywheel design.

The magnetic bearing comes in a variety of configurations using permanent magnets and dynamic current actuators to achieve the required restraints. A rigid body can have 6 degrees of freedom. The bearings retain the rotor in 5 degrees of freedom, leaving 1 degree free for rotation. The homo-polar configuration is depicted in Figure below. Permanent magnets are used to provide free levitation support for the shaft and to help stabilize the shaft under a rotor drop. The electromagnet coils are used for stabilization and control. The control coils operate at low-duty cycle, and only one servo-controller loop is needed for each axis. The servo-control coils provide active control to maintain shaft stability by providing restoring forces as needed to maintain the shaft in the centered position. Various position and velocity sensors are used in an active feedback loop. The electric current variation in the actuator coils compels the shaft to remain centered in position with desired clearances.

Small flux pulsation as the rotor rotates around the discrete actuator coils produces a small electromagnetic loss in the metallic parts. This loss, however, is negligible compared to the friction loss in conventional bearings.

In the flywheel system configuration, the rotor can be located radially outward, as shown in Figure 10.24. It forms a volume-efficient packaging. The magnetic bearing has permanent magnets inside. The magnetic flux travels through the pole shoes on the stator

and a magnetic feedback ring on the rotor. The reluctance lock between the pole shoes and the magnetic feedback ring provides the vertical restraint.

The horizontal restraint is provided by the two sets of dynamic actuator coils. The currents in the coils are controlled in response to a feedback loop controlling the rotor position.

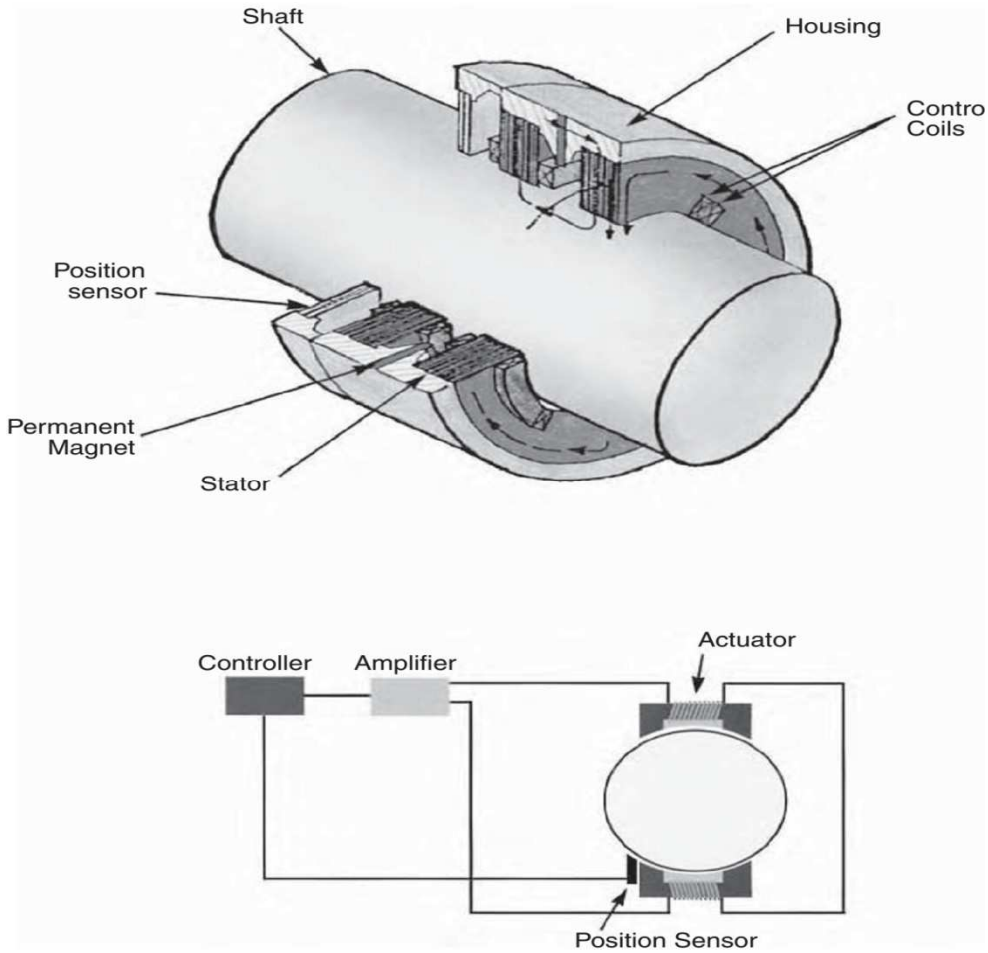

Avcon's patented homopolar permanent-magnet active bearing.

The electromechanical energy conversion in both directions is achieved with one electrical machine, which works as a motor for spinning up the rotor for energy charge, and as a generator while decelerating the rotor for a discharge. Two types of electrical machines can be used, the synchronous machine with variable-frequency converter or the permanent-magnet brushless DC machine. The machine voltage varies over a wide range with speed. The power electronic converters provide an interface between the widely varying machine voltage and the fixed bus voltage. It is possible to design a discharge converter and a charge converter with input voltage varying over a range of 1 to 3. This allows the machine speed to vary over the same range. That is, the low rotor speed can be

one third of the full speed. Because the energy storage is proportional to the speed squared, the flywheel SOC at low speed can be as low as 0.10. This means 90% of the flywheel energy can be discharged with no hardship on the power electronics, or other components of the system.

As to the number of charge-discharge cycles the flywheel can withstand, the fatigue life of the composite rotor is the limiting factor. Experience indicates that the polymer fiber composites in general have a longer fatigue life than solid metals.

A properly designed flywheel, therefore, can last much longer than a battery and can discharge to a much deeper level. Flywheels made of composite rotors have been fabricated and tested to demonstrate more than 10,000 cycles of full charge and discharge. This is an order of magnitude more than any battery can deliver at present.

3.9.3 BENEFITS OFFLYWHEEL OVERBATTERY

The main advantages of the flywheel energy storage over the battery are as follows:

• High energy storage capacity per unit of weight and volume

• High DoD

• Long cycle life, which is insensitive to the DoD

• High peak-power capability without concerns about overheating

• Easy power management, as the SOC is simply measured by the speed

• High round-trip energy efficiency

Flexibility in design for a given voltage and current

• Improved quality of power as the electrical machine is stiffer than the battery

These benefits have the potential of making the flywheel the storage alternative per watthour delivered over its operating life.

3.10. FUEL CELL ENERGY STORAGE SYSTEM

3.11 BIO-MASS AND BIO-FUEL:

MODULE IV

STAND ALONE SYSTEM

A **stand-alone power system** (**SAPS** or **SPS**), also known as **remote area power supply** (**RAPS**), is an off-the-grid electricity system for locations that are not fitted with an electricity distribution system. Typical SAPS include one or more methods of electricity generation, energy storage, and regulation.

Electricity is typically generated by one or more of the following methods:

- Solar panel
- Wind turbine
- Geothermal source
- Micro combined heat and power
- Micro hydro
- Diesel or Bio-fuel generator

Storage is typically implemented as a battery bank, but other solutions exist including fuel cells. Power drawn directly from the battery will be direct current extra low voltage (DC ELV), and this is used especially for lighting as well as for DC appliances. An inverter is used to generate AC low voltage, which more typical appliances can be used with.

Wind Stand Alone Systems

Wind energy is one the renewable power supply options for remote areas. Its advantages include low environmental impact and occupy relatively small area of land in proportion to their electrical output. The output from wind generators increases significantly as the wind speed increases, and wind speed increases as height above the ground increases. In evaluating any available wind data the effect of the local topography/geography needs to

be considered as it may cause uneven wind patterns that will affect the turbine's output (Ackermann, 2005). A wind turbine installed in an area with a good wind resource can produce energy cost-effectively.

This energy option however has limited use because modern energy converter systems are expensive to set up and if located near homes or workplaces noise of the rotor can be annoying. Another problem is that wind does not blow all the time and in some cases the speeds may not be enough for electricity generation. They are not suitable for mobile needs and maintenance costs are high. If wind- driven generators are linked to diesel generators the efficiency of the diesel plant can be reduced (Wichert, 1997).

Stand-Alone Photovoltaic Systems

Photovoltaic power systems are generally classified according to their functional and operational requirements, their component configurations, and how the equipment is connected to other power sources and electrical loads. The two principal classifications are grid-connected or utility-interactive systems and stand-alone systems.

Wichert (1997) argues purports that stand-alone PV systems are designed to operate independent of the electric utility grid, and are generally designed and sized to supply certain DC and/or AC electrical loads. These types of systems may be powered by a PV array only, or may use wind, an engine-generator or utility power as an auxiliary power source in what is called a PV-hybrid system. The simplest type of stand-alone PV system is a direct-coupled system, where the DC output of a PV module or array is directly connected to a DC load (Figure 2). Since there is no electrical energy storage (batteries) in direct-coupled systems, the load only operates during sunlight hours, making these designs suitable for common applications such as ventilation fans, water pumps, and small circulation pumps for solar thermal water heating systems. Matching the impedance of the electrical load to the maximum power output of the PV array is a critical part of designing well-performing direct-coupled system. For certain loads such as positive-displacement water pumps, a type of electronic DC-DC converter, called a maximum power point tracker (MPPT), is used between the array and load to help better utilize the available array maximum power output.

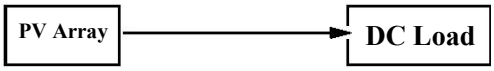

Figure 1. Direct-coupled PV system.

In many stand-alone PV systems, batteries are used for energy storage. Batteries are often used in PV systems for the purpose of storing energy produced by the PV array during the day, and to supply it to electrical loads as needed (during the night and periods of

cloudy weather). Other reasons batteries are used in PV systems are to operate the PV array near its maximum power point, to power electrical loads at stable voltages, and to supply surge currents to electrical loads and inverters. In most cases, a battery charge controller is used in these systems to protect the battery from overcharge and overdischarge (Wichert, 1997).Figure 2 shows a diagram of a typical stand-alone PV system powering DC and AC loads

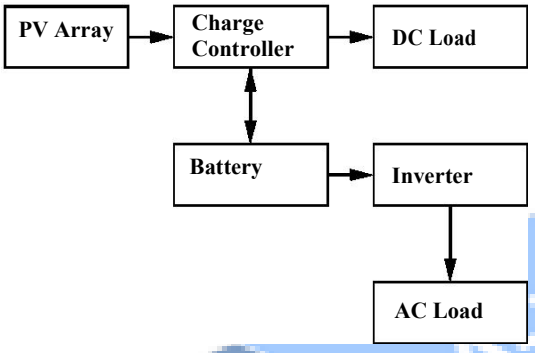

Fig. 2 Diagram of stand-alone PV system with battery storage powering DC and AC loads.

PV systems are like any other electrical power generating systems, though the equipment used is different from that used for conventional electromechanical generating systems. However, the principles of operation and interfacing with other electrical systems remain the same, and are guided by a well-established body of electrical codes and standards. Although a PV array produces power when exposed to sunlight, a number of other components are required to properly conduct, control, convert, distribute, and store the energy produced by the array. Depending on the functional and operational requirements of the system, the specific components required may include major components such as a DC-AC power inverter, battery bank, system and battery controller, auxiliary energy sources and sometimes the specified electrical load (appliances)

The performance of PV modules and arrays are generally rated according to their maximum DC power output (Watts) under Standard Test Conditions (STC). Standard Test Conditions are defined by a module (cell) operating temperature of 25° C (77° F),

and incident solar irradiance level of 1000 W/m^2 and under Air Mass 1.5 spectral distribution. Since these conditions are not always typical of how PV modules and arrays operate in the field, actual performance is usually 85 to 90 percent of the STC rating. Photovoltaic modules are extremely safe and reliable products, with minimal failure rates and projected service lifetimes of 20 to 30 years. Most major manufacturers offer warranties of 20 or more years for maintaining a high percentage of initial rated power output. When selecting PV modules, one should look for the product listing, qualification testing and warranty information in the module manufacturer's specifications (Wichert, 1997).

Merits and demerits of PV Systems

Photovoltaic systems have a number of unique advantages over conventional power-generating technologies. PV systems can be designed for a variety of applications and operational requirements, and can be used for either centralized or distributed power generation. PV systems have no moving parts, are modular, easily expandable and even transportable in some cases. Energy independence and environmental compatibility are two attractive features of PV systems. The fuel (sunlight) is free, and no noise or pollution is created from operating PV systems. In general, PV systems that are well designed and properly installed require minimal maintenance and have long service lifetimes (Gabrovska et al, 2004).

Diesel Power System

Stand-alone diesel generator sets are relatively inexpensive to purchase but expensive to operate and maintain. Specific fuel consumption characteristics of a typical diesel engine show that a diesel generator must be operated above a certain minimum load level in order to maintain efficiency and to reduce the possibility of premature failures. This is shown in figure 4 which shows a typical curve for specific fuel consumption versus load ratio.

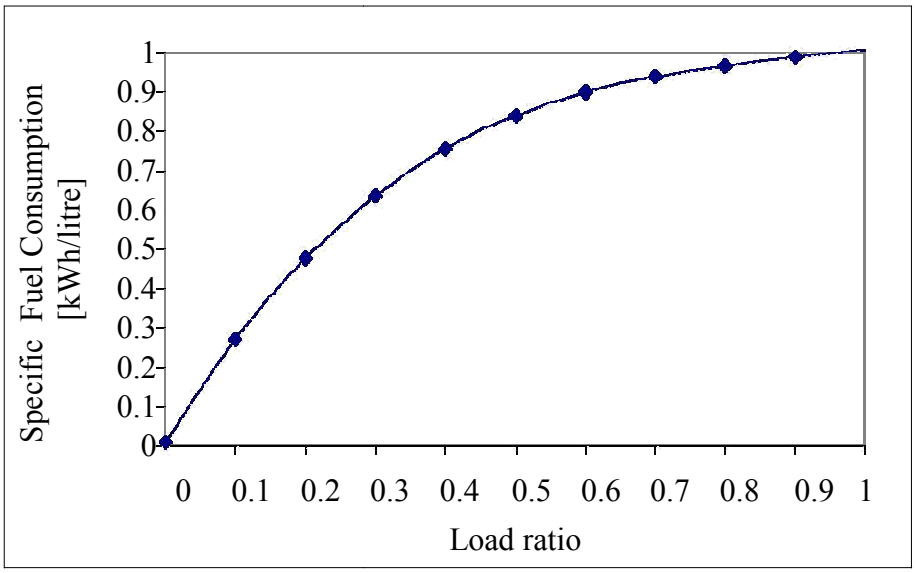

Figure 3 A typical curve for specific fuel consumption versus load ratio.

The typical specific fuel consumption versus load ratio curve generally shows that specific fuel consumption increases as the load ratio increases. The relationship between the two is such that low load ratios result in high fuel consumption.

The problem of selecting a diesel generator size for a newly emerging community, or one which has not had continuous power previously, is difficult while population fluctuations, seasonal demand, increase in number and use of electrical appliances are complex issues for designers to assess. A generator should never be operated at its maximum power output for more than 30 minutes. Rated power, or the power that a generator can produce for long periods of time, is a more reliable measure of generator power (Beyer et al, 2003).

The conventional approach for a stand-alone diesel is to select the diesel generator set according to the peak load. During periods of low loads, the diesel generators will be poorly loaded with the consequences of poor fuel efficiency, wet stacking, low combustion and carbon deposits (glazing) on the cylinder walls, causing premature engine wear. Common practice is to install “dump lo ads” which deliberately dissipate energy when useful demand is low, to protect the diesel engines.

The same authors argue that several approaches have been considered to maximise the economy of operating diesel generators. One system employs a number of diesel generators that need to operate parallel to achieve peak load supply, but can be shut down systematically as load reduces. This system will require automatic sequencing and synchronisation controls A two-diesel system-one small set and the other larger with manual change over switch- is used to meet the load requirements .The small set is operated during low-demand periods while the larger set is reserved for the high-demand periods. This scheme is a relatively low-cost one, but offers little protection to the larger generator with low demand and is not very convenient.

Although diesel generators have a low initial capital cost and there is support available on how to operate and maintain them, experience has shown that there are significant limitations associated with this method of generation. Getting a maintenance crew on time in such isolated area is a problem. Transportation of fuel is another problem. Diesel gensets have problems with short durability, which is due to the fact that they work very inefficiently when running just at fractions of their rated capacity. Frequent start-up and shut-down procedures also decrease their lifetime (Haupt and Haupt, 1998).

These diesel generators are very expensive to run and maintain and every litre of diesel releases about 3 kg of CO2 gases (Lenzen, 1999). The diesel generator remain in the system to equalize the battery and to act as a backup generator for extended periods of low renewable energy input or high load demand. Such systems are usually installed in locations where fuel supplies are expensive and unreliable, or where strong incentives for the use of renewable energy exist (Drouilet, 1997).

MICROGRID

A micro-grid is a group of interconnected loads and distributed energy resources within clearly defined electrical boundaries that acts as a single controllable entity with respect

to the grid. If desired, a microgrid can connect and disconnect from the grid to enable it to operate in both grid connected or island mode.

Micro-grid Key Attributes
(Defining Characteristics):

• Grouping of interconnected loads and distributed energy resources

• Can operate in island mode or grid connected if desired

• Can connect and disconnect from the grid if desired

• Acts as a single controllable entity to the grid

Why are micro-grids important?

1. Enables Grid Modernization

• Key component of grid modernization

• Enables integration of multiple Smart Grid technologies

2. Enhance the integration of Distributed and Renewable Energy Sources

• Facilities integration of combined heat and power (CHP)

• Promotes energy efficiency and reduces losses by locating generation near demand

• Potential to reduce large capital investments by meeting increased consumption with locally generated power. (Local generation may lower investment in the macro-grid)

• Encourages third party investment in the local grid and power supply

• Potential to reduce peak load

3. Meets End User Needs

•Ensure energy supply for critical loads

•Power quality and reliability controlled locally

•Promotes demand- side management and load leveling

•Promotes community energy independence and allows for community involvement in electricity supply

•Designed to meet local needs and increase customer (end - use) participation

4.Supports the Macro-grid

• Enables a more flexible macro-grid by handling sensitive loads and the variability of renewable locally

•Enhances the integration of distributed and renewable energy resources including CHP

•Potential to supply ancillary services to the bulk power system

•Potential to lower overall carbon footprint by maximizing clean local generation

•Potential to resolve voltage regulation or overload issues

How does a micro-grid work?

The grid connects homes, businesses and other buildings to central power sources, which allow us to use appliances, heating/cooling systems and electronics. But this interconnectedness means that when part of the grid needs to be repaired, everyone is affected.

This is where a micro-grid can help. A micro-grid generally operates while connected to the grid, but importantly, it can break off and operate on its own using local energy generation in times of crisis like storms or power outages, or for other reasons.

A micro-grid can be powered by distributed generators, batteries, and/or renewable resources like solar panels. Depending on how it's fueled and how its requirements are managed, a microgrid might run indefinitely.

How does a micro-grid connect to the grid?

A micro-grid connects to the grid at a point of common coupling that maintains voltage at the same level as the main grid unless there is some sort of problem on the grid or other reason to disconnect. A switch can separate the micro-grid from the main grid automatically or manually, and it then functions as an island.

Why would a community choose to connect to micro-grids?

A micro-grid not only provides backup for the grid in case of emergencies, but can also be used to cut costs, or connect to a local resource that is too small or unreliable for traditional grid use. A micro-grid allows communities to be more energy independent and, in some cases, more environmentally friendly.

How much can a micro-grid power?

A micro-grid comes in a variety of designs and sizes. A micro-grid can power a single facility like the Santa Rita Jail micro-grid in Dublin, California. Or a micro-grid can power a larger area. For example, in Fort Collins, Colorado, a micro-grid is part of a larger goal to create an entire district that produces the same amount of energy it consumes.

Micro-grid Concept

Micro-grid has two critical components, the static switch and the micro-source. The static switch has the ability to autonomously island the micro-grid from disturbances such as faults, IEEE 1547 events or power quality events. After islanding, the reconnection of the microgrid is achieved autonomously after the tripping event is no longer present. This synchronization is achieved by using the frequency difference between the islanded microgrid and the utility grid insuring a transient free operation without having to match frequency and phase angles at the connection point. Each microsource can seamlessly balance the power on the islanded Microgrid using a power vs. frequency droop controller. This frequency droop also insures that the Microgrid frequency is different from the grid to facilitate reconnection to the utility. Basic microgrid architecture is shown in Figure 1. This consists of a group of radial feeders, which could be part of a distribution system or a building's electrical system. There is a single point of connection to the utility called point of common coupling. Some feeders, (Feeders A-C) have sensitive loads, which require local generation. The non-critical load feeders do not have any local generation. Feeders A-C can island from the grid using the static switch that can separate in less than a cycle. In this example there are four micro-sources at nodes 8, 11, 16 and 22, which control the operation using only local voltages and currents measurements.

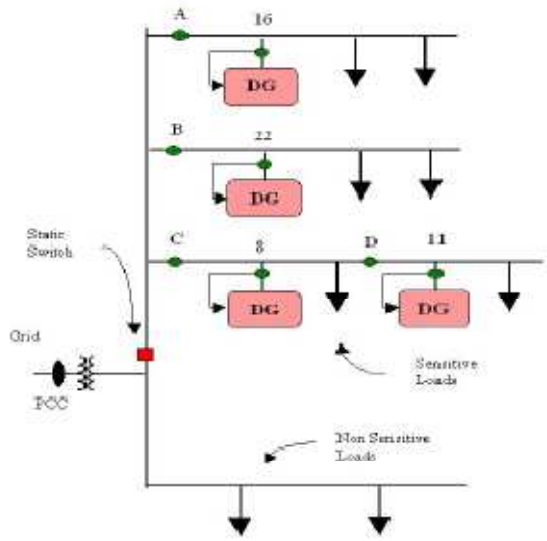

Figure 1.1 Microgrid Architecture Diagram.

When there is a problem with the utility supply the static switch will open, isolating the sensitive loads from the power grid. Non sensitive loads ride through the event. It is assumed that there is sufficient generation to meet the loads' demand. When the microgrid is grid-connected power from the local generation can be directed to the non-sensitive loads. To achieve this we promote autonomous control in a peer-to-peer and plug-and-play operation model for each component of the microgrid. The peer-to-peer concept insures that there are no components, such as a master controller or central storage unit that is critical for operation of the microgrid. This implies that the microgrid can continue operating with loss of any component or generator. With one additional source (N+1) we can insure complete functionality with the loss of any source. Plug-and-play implies that a unit can be placed at any point on the electrical system without re-engineering the controls. The plug-and-play model facilitates placing generators near the heat loads thereby allowing more effective use of waste heat without complex heat distribution systems such as steam and chilled water pipes.

Microgrid Components

- Distributed Generation
- Loads
- Immediate storage
- Controller
- Point of Common Coupling

Distributed Generation

Distributed energy, also **district** *or* **decentralized energy** is generated or stored by a variety of small, grid-connected devices referred to as **distributed energy resources** (**DER**) or distributed energy resource systems.

Conventional power stations, such as coal-fired, gas and nuclear powered plants, as well as hydroelectric dams and large-scale solar power stations, are centralized and often require electricity to be transmitted over long distances. By contrast, DER systems are decentralized, modular and more flexible technologies, that are located close to the load they serve, albeit having capacities of only 10 megawatts (MW) or less.

DER systems typically use renewable energy sources, including, but not limited to, small hydro, biomass, biogas, solar power, wind power, geothermal power and increasingly play an important role for the electric power distribution system. A grid-connected device for electricity storage can also be classified as a DER system, and is often called a **distributed energy storage system** (**DESS**). By means of an interface, DER systems can be managed and coordinated within a smart grid. Distributed generation and storage enables collection of energy from many sources and may lower environmental impacts and improve security of supply.

HYBRID POWER SYSTEMS

As convention fossil fuel energy sources diminish and the world's environmental concern about acid deposition and global warming increases, renewable energy sources (solar, wind, tidal, biomass and geothermal etc) are attracting more attention as alternative energy sources. These are all pollution free and one can say eco friendly. These are available at free of cost. In India, there is severe power shortage and associated power quality problems, the quality of the grid supply in some places is characterized by large voltage and frequency fluctuations, scheduled and un scheduled power cuts and load restrictions. Load shedding in many cities in India due to power shortage and faults is a major problem for which there is no immediate remedy in the near future since the gap between the power demand and supply is increasing every year. This led to rapid usage of stand-by petrol or diesel generator sets and conventional battery inverter sets in both urban and rural areas. Shopkeepers, house owners and offices commonly use 1-5 kW fuel generators in India when utility exercises load shedding.

In India wind and solar energy sources are available all over the year at free of cost whereas tidal and wave are costal area. Geothermal is available at specific location. To meet the demand and for the sake of continuity of power supply, storing of energy is necessary.

The term hybrid power system is used to describe any power system combine two or more energy conversion devices, or two or more fuels for the same device, that when integrated, overcome limitations inherent in either.

Usually one of the energy sources is a conventional one (which necessarily does not depend on renewable energy resource) powered by a diesel engine, while the other(s) would be renewable viz. solar photovoltaic, wind or hydro.

The design and structure of a hybrid energy system obviously take into account the types of renewable energy sources available locally, and the consumption the system supports. For example, the hybrid energy system presented here is a small-scale system

and the consumption of power takes place during nights, so the wind energy component will make a more significant contribution in the hybrid system than solar energy. Although the energy produced by wind during night can be used directly without storage, a battery is needed to store solar and wind energy produced during the day.

In addition to the technical considerations, cost benefit is a factor that has to be incorporated into the process of optimizing a hybrid energy system. In general, the use of wind energy is cheaper than that of solar energy. In areas where there is a limited wind source, a wind system has to be over-dimensioned in order to produce the required power, and this results in higher plant costs.

It has been demonstrated that hybrid energy systems (renewable coupled with conventional energy source) can significantly reduce the total life cycle cost of a standalone power supplies in many off-grid situations, while at the same time providing a reliable supply of electricity using a combination of energy sources. Numerous hybrid systems have been installed across the world, and expanding renewable energy industry has now developed reliable and cost competitive systems using a variety of technologies. Research in the development of hybrid systems focused on the performance analysis of demonstration systems and development of efficient power converters, such as bi-directional inverters, battery management units (storage facilities), and optimization of different sources of energy Sources, etc.

Hybrid power systems combine two or more energy conversion devices, or two or more fuels for the same device, that when integrated, overcome limitations inherent in either.

Hybrid systems can address limitations in terms of fuel flexibility, efficiency, reliability, emissions and / or economics.

Value Propositions

1. High Efficiency
2. High Reliability

3. Low Emissions

4. Acceptable Cost

Higher Efficiency

Incorporating heat, power, and highly-efficient devices (fuel cells, advanced materials, cooling systems, etc.) can increase overall efficiency and conserve energy for a hybrid system when compared with individual technologies.

EX-Combining heat and power systems, such as those at this University of Maryland test bed, can greatly improve overall energy efficiency.

High Reliability

Achieving higher reliability can be accomplished with redundant technologies and/or energy storage. Some hybrid systems typically include both, which can simultaneously improve the quality and availability of power.

EX- The PV/Propane/Battery hybrid at Dangling Rope Marina significantly increased the reliability of the power system.

Low Emissions

Hybrid systems can be designed to maximize the use of renewables, resulting in a system with lower emissions than traditional fossil-fueled technologies.

EX- The SEGS solar thermal power plants in Southern California produce far fewer emissions than traditional electricity generation technologies.

Acceptable Cost

Hybrid systems can be designed to achieve desired attributes at the lowest acceptable cost, which is the key to market acceptance.

EX- By cutting diesel fuel consumption, the King Cove, Alaska run-of-the- river hydroelectric plant and battery system reduced electricity costs for the town's residents.

2.3 Hybrid Power System Configurations

According to Wichert (1997), hybrid energy systems with or without renewables, are classified according to their configuration as series, switched hybrid, or parallel hybrid.

2.3.1 Series hybrid system

In this system either the renewable energy source or the diesel generator is used to maintain charge in a large battery bank. During periods of low electricity demand the diesel generator is switched off and the load can be supplied from PV together with stored energy. Power from the battery bank is converted to AC at mains voltage and frequency by a converter and is then fed to the load. Battery charging can be controlled by controlling the excitation of the alternator (Wichert, 1997). The charge controller prevents overcharging of the battery bank from PV generator when the PV power exceeds the load demand and the batteries are fully charged. The system can be operated in manual or automatic mode, with the addition of appropriate battery voltage sensing and start/stop control of the engine-driven generator.

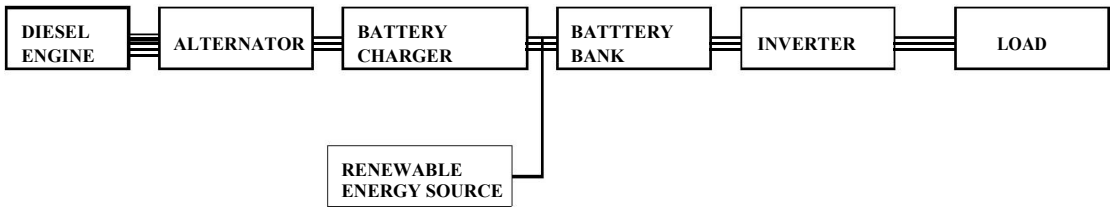

Figure 6 Series hybrid system

Advantages of this configuration include that the engine-driven generator can be sized to be optimally loaded while supplying the load and charging the battery bank, until the state of charge (SOC) of 70-80% is reached. No switching of AC power between the different energy sources is required thus simplifying the electrical output interface. Also the power supplied to the load is not interrupted when the diesel generator is started and the inverter can generate a sine-wave, modified square-waves, or square-wave, depending on the application.

Although the design principles of the series hybrid systems are relatively simple to implement. Islam (1999) highlights its disadvantages to include: low overall efficiency due to the series configuration of system elements; substantially larger battery capacity than the maximum peak load demand resulting in the system being more expensive component to the system; and with renewable inputs, there is limited control of diesel alternator because the system is based on level of charge in the battery rather than the site load.

A series hybrid system is characterized by low overall system efficiency since the diesel cannot supply power directly to the load; large inverter and due to the cycling profile large battery bank is required to limit the depth of discharge; and limited optimisation of diesel alternator and renewable energy sources(SOPAC Miscellaneous Report 406, 2005). The battery bank is cycled frequently, shortening its lifetime. If the inverter fails there is complete loss of power to the load, unless the load can be supplied directly from the diesel generator for emergency purposes.

2.3.2 Switched hybrid system

This system allows with either the engine-driven generator or the inverter as the AC source but no parallel operation of the main generation source is possible (Islam, 1999). Both the diesel generator and the PV array can charge the battery bank. The diesel alternator meets the load during the day and evening peak while the battery bank is

charged by the renewables and any excess power from the diesel. Power is supplied to the load by the battery through the inverter during the low load night period. The typical layout of the system is as shown in figure .

A-Z
Shiksha

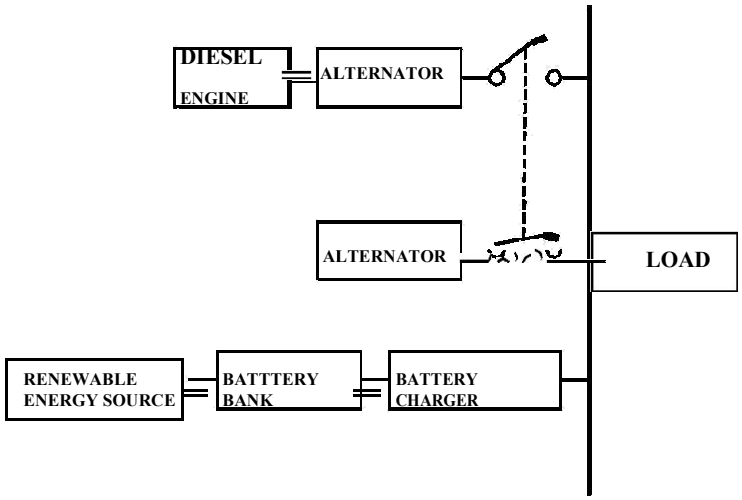

Figure Switched configuration

The main advantages of the system are quiet operation at night and partial improvements in diesel consumption. A switched hybrid system is also characterized by the fact that the diesel generator can supply the load directly, therefore improving the system efficiency and reducing the fuel consumption (SOPAC Miscellaneous Report 406, 2005). As for the series system, the diesel generator is switched off during periods of low electricity demand and the inverter can generate a sine-wave, modified square-wave, or square-wave, depending on the application. Switched hybrid energy systems can be in manual mode, although the increased complexity of the system makes it highly desirable to include an automatic controller, which can be implemented with the addition of appropriate battery voltage sensing start/stop control of the engine-driven.

The diesel system and inverter are typically designed to meet the peak loads, which reduces their efficiency at part load operation and there is no optimisation control on the diesel as the source switching solution is based on a simple time clock. Power to the load is interrupted momentarily when the AC power sources are transferred

2.3.3 Parallel hybrid System (Source/ Parallel Inverter/ Storage)

The parallel configuration shown in figure – allows all energy sources to supply the load separately at low or medium demand, as well as supplying quick load from

combined sources by synchronizing the inverter with the alternator output wave form the bi-directional inverter can charge the battery bank when access energy is available from the engine driven generator, as well as act as DC-AC converter In this case the renewables and the diesel generator supply part of the load demand directly. The diesel generator and the inverter run in parallel.

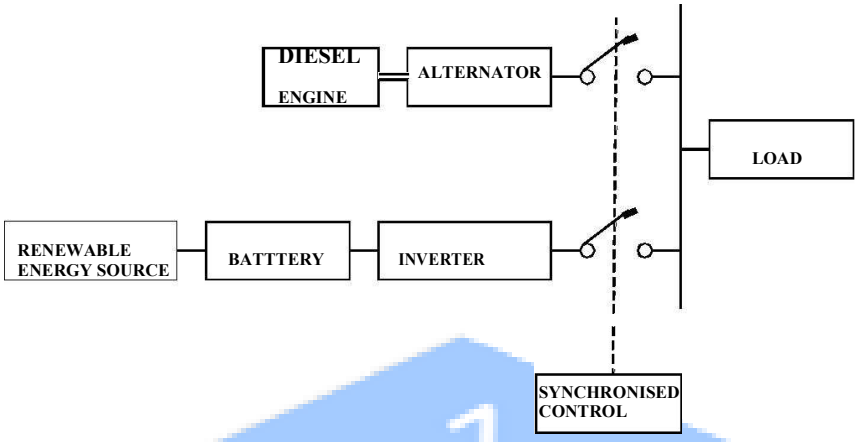

Figure :Parallel configuration

Advantages of this configuration over other system configurations are that the system load can be met in the most optimal way, diesel efficiency can be maximized, diesel generator maintenance can be minimized and there is a reduction in the capacities of diesel, battery and renewable sources while load peaks are being met. However, automatic control is essential for the reliable operation of the system and the system operation is less transparent to the untrained user of the system. Also the inverter has to be a true sign wave inverter with the ability to synchronize with a secondary AC source.

Diesel Energy:

In hybrid system diesel energy is only work as a backup source. When the demand on its peak, so that the available sources are insufficient for that then the diesel backup is required.

Hybrid system Economics

Life Cycle Costing

Engineering economy is the application of economic factors and criteria to evaluate alternatives, considering the time value of money. The engineering economy study involves computing a specific economic measure of worth for estimated cash flows over a specific period of time.

The terms interest, interest period and interest rate are useful in calculating equivalent sums of money for an interest period. Interest is the manifestation of the time value of money. It is the difference between an ending amount of money and the beginning amount over an interest period. For more than one interest period, the terms simple interest and compound interest become important.

1.1. Simple Interest:

Simple interest is calculated using the principal only, ignoring any interest accrued in preceding interest periods. The total simple interest over several periods is computed as:

Simple Interest = (Principal) x (Number of Periods) x (Interest Rate)

Here the interest rate is expressed in decimal form. The total sum accrued at the end of n interest periods is given by:

$$S = P(1 + n \cdot i) \quad \text{..... (1)}$$

S = Sum accrued at the end of interest periods (also called Future Worth) P = Principal (also called Present Worth)

n = Number of interest periods (normally one year is taken as one interest period) i = Interest rate (normally annual interest rate)

1.2. Compound Interest:

For compound interest, the interest accrued for each interest period is calculated on the principal plus the total amount of interest accumulated in all previous periods. Compound interest reflects the effect of the time value of money on the interest also. The interest for one period is calculated as:

Compound Interest = (Principal + All accrued Interest) x (Interest Rate)

The total sum accrued after a number of interest periods can be calculated from the following expression:

$$S_n = P(1+i)^n \quad \ldots\ldots\ldots\ldots\ldots\ldots\ldots\ldots\ldots\ldots\ldots\ldots\ldots\ldots\ldots\ldots\ldots\ldots\ldots\ldots\ldots\ldots\ldots\ldots$$

(2) S_n = Sum accrued at the end of n interest periods

P = Principal

i = Interest rate expressed in decimal form (annual interest rate) n = Number of interest periods (number of years)

We can see from the above two expressions that the sum accrued at the end of first year would be same for both simple interest and compound interest calculations. However for interest periods greater than one year, the sum accrued for compound interest would be larger.

What happens if the interest is compounded more than once in a year? We need to modify equation (2) and is given by:

$$S_n = P\left(1+\frac{i}{m}\right)^{nm} \quad \ldots\ldots\ldots\ldots\ldots\ldots\ldots\ldots\ldots\ldots\ldots\ldots\ldots\ldots\ldots\ldots\ldots\ldots\ldots\

$$S = P \cdot e^{in} \quad \ldots\ldots\ldots\

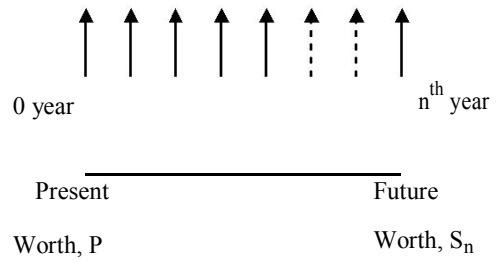

The cash flow diagram helps in analyzing the problem better.

Equations (2) and (5) are used in problems concerning single payment. In today's world we deal with problems that involve annual/monthly equal payments such as home mortgage payments, vehicle loans or loans for consumer electronic goods. The following relationships hold good for problems involving such uniform series:

$$P = A\frac{(1+i)^n - 1}{i(1+i)^n} \quad \text{.....(6)}$$

P = Present worth

A = Uniform Annual amount (installments)

$$\frac{(1+i)^n - 1}{i} \quad \text{.....(7)}$$

S_n = Future worth

From these equations, we can calculate present worth or future worth given uniform annual amounts. We can also calculate the uniform annual amounts given either present worth or the future worth. A typical example would be person borrowing money from a financial institute for buying a vehicle. Knowing the interest rate and number of installments, the person can calculate the uniform equal amounts he or she has to pay depending on the amount borrowed. A typical cash flow diagram would look as follows:

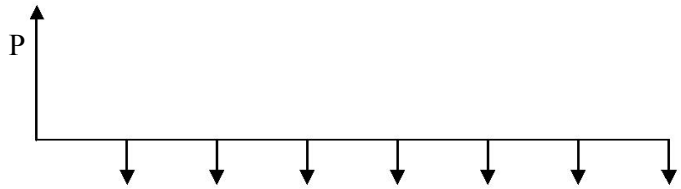

A

The up-arrow indicates the amount ‘coming in’ such as borrowing and the down arrow indicates the amount ‘going out’ such re-payments towards the borrowing.

1.3. Inflation:

In all the above equations, we had assumed that there is no inflation. Inflation is an increase in the amount of money necessary to obtain the same amount of product before the inflated price was present. Inflation occurs due to downward change in the value of the currency. If ‘C’ is the cash in hand today for buying a product, f is the inflation rate, then the amount we need to pay for the same product after n years would be $C(1 + f)^n$, assuming uniform inflation over the years. The present worth of such money with interest component added is given by:

$$P_f = C \frac{(1+f)^n}{(1+i)^n} \quad \text{.....(8)}$$

P_f = Present worth with inflation taken into account.

If i = f, no change in worth, year after year.

If i > f, save and do not buy the product now.

If i < f, buy the product now and do not save.

An important relationship between the present worth and the uniform annual amount taking inflation into account is given by the following equation:

$$P = A \cdot \frac{1+f}{i-f} \cdot \left[1 - \left(\frac{1+f}{1+i}\right)^n\right] \quad \text{.....} \quad (9)$$

for i ≠ f . If i = f, then we get the following relationship:

$$P = A \cdot n \quad \text{.....} \quad (10)$$

1.4. Life Cycle Cost:

Life cycle costing or LCC is an important factor for comparing the alternatives and deciding on a particular process for completing a project. The different components taken into account for calculating LCC are:

LCC = Capital + Replacement cost + Maintenance cost + Energy cost – Salvage

Here, Capital is the present worth. Replacement cost that may occur at a later years need to converted to present worth. Maintenance cost is annual maintenance cost and needs to be converted to present worth and so is the energy cost. Salvage is the money that is obtained while disposing the machinery at the end of life cycle period. Even this amount has to be converted to present worth for calculating LCC. Once we have the LCC value, we can easily find the Annual Life Cycle Costing using the following equation:

$$ALCC = \frac{LCC}{} \quad \text{.....} \quad (11)$$

$$\frac{1+f)}{i-f} \quad \square 1 \quad - \frac{1 \quad +f}{1+i}^{n}$$

These equations would be clearer once we do some problems.

1.5. Example:

A community has 500 people. The source of water to the community is from the bore-wells and the supply of water from the bore-wells is by hand-pumps. Six hand-pumps are installed to meet the water requirement of the community. Per-capita water consumption of the community is 40 liters/day. Bore-well depth is 20 meters. The cost of each hand-pump is Rs.5,000.00. Cost of digging of each bore -well is at the rate of Rs.250.00 per meter. Life of the hand-pump is 10 years. Annual maintenance cost per pump is Rs.1250.00. If the rate of interest is 10%, what is the unit water cost for the life cycle period of 20 years?

Solution:

Step 1: Calculate capital cost (K):

For digging 6 bore-wells = (Rs.250.00 x 20) x 6 …….. = Rs.30,000.00

Cost of 6 hand-pumps = Rs.5,000.00 x 6 ……. = Rs.30,000.00

Total capital cost …… = Rs.60,000.00

Step 2: Calculate replacement cost (R):

Cost for replacing 6 hand-pumps after 10 years ……. = Rs.30,000.00

Step 3: Calculate annual maintenance cost (M):

Annual maintenance cost for 6 hand-pumps = Rs.1250.00 x 6 = Rs.7,500.00

Now let us draw the cash-flow diagram for the above data:

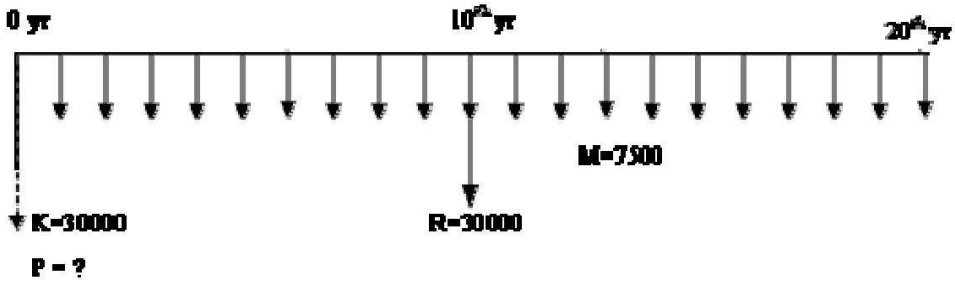

From figure, K is the capital at 0th year. Let us call it **P1 = Rs.30000.00**

R is the replacement cost for hand-pumps occurring in 10th year. We need to find the Present worth of this replacement cost. Let P2 be the present worth. Hence, the value of

P2 = $\frac{R}{(1+i)^n} = \frac{30000}{(1+0.1)^{10}}$ = **Rs.11566.30**

M is the annual maintenance cost for 6 hand- pumps occurring at the end of each year. The present worth of the uniform series needs to be found. Let P3 be the present worth.

Hence, the value of **P3** = $\frac{M}{i}\left[1-\frac{1}{(1+i)^n}\right] = \frac{7500}{0.1}\left[1-\frac{1}{(1+0.1)^{20}}\right] =$ **Rs.63851.73**.

Step 4: Find the total present worth or LCC

Now the total present worth showed by dotted line in the cash flow diagram is the sum of all the present worth. That is: P = P1 + P2 + P3.

Hence, Life Cycle Cost or **LCC** = Rs.60000.00 + Rs.11566.30 + Rs.63851.73 =

Rs.135418.03.

Step 5: Find annual life cycle cost or ALCC.

From LCC value, we can calculate Annual Life Cycle Cost or ALCC by using the following expression:

$$ALCC = \frac{LCC}{\frac{1}{i}\left[1 - \frac{1}{(1+i)^n}\right]} = \frac{135418.03}{\frac{1}{0.1}\left[1 - \frac{1}{(1+0.1)^{20}}\right]} = \textbf{Rs.15906.15}$$

Step 6: Find unit water cost.

Annual water requirement = 500 people x 40 liters/day x 365 days = 7300000 liters.

$$\textbf{Cost of water} = \frac{ALCC}{\textit{Annual Water Requirement}} = \frac{15906.15}{7300000} = \textbf{Rs.0.00218/liter}.$$

1.6. Example:

A PV array of 500 watts has been installed to pump water from a bore-well of 2 meters deep using a submergible motor and pump system to an over-head tank. The length of pipe required to pump the water is 30 meters. Following are the costs involved for the sub-systems and their life spans:

PV Array : $8/peak watt; Life span – 15 years
Motor and pump: $2/watt; Life span – 7.5 years
Pipe cost: $8/meter; Life span – 5 years

Cost of digging the bore-well:
$20/meter Maintenance cost: $80/year
Miscellaneous cost: $3.5/watt

If the interest rate is 10%, calculate the Life Cycle Cost of the water for a period of 15

years and also water cost per year (ALCC).

Solution:

Step 1: Calculate the Capital cost (K)

Cost of PV array = \$8/watt x 500 watts = \$4000

Cost of motor and pump = \$2/watt x 500 watts =
\$1000 Cost of pipe = \$8/meter x 30 meters = \$240

Cost of digging the bore-well = \$20/meter x 2 meters = \$40
Miscellaneous cost = \$3.5/watt x 500 watts = \$1750

Total capital cost = \$4000 + \$1000 + \$240 + \$40 + \$1750 =
\$7030 *Step 2*: Calculate Replacement cost (R)

Replacement cost of motor and pump after 7.5 years = \$1000

Replacement cost of pipe at the end of 5th year and at the end of 10th year = \$240
each *Step 3*: Calculate maintenance cost (M)

The annual maintenance cost is given as \$80.

Let us draw the cash-flow diagram for the above data.

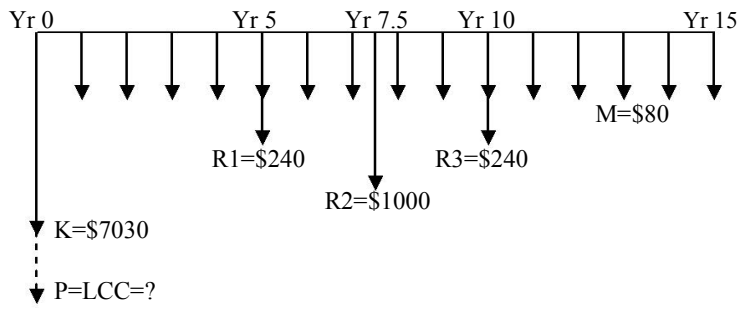

From the figure, K is the capital cost at year 0. Let us call it **P1 = $7030**.

R1 is the replacement cost of pipe in year 5. Let us call the present worth of R1 as P2.

This can be calculated as follows: P2 = $\frac{R1}{(1+i)^n} = \frac{240}{(1+0.1)^5}$ = **$149.02**

R2 is the replacement cost of motor and pump in year 7.5. Let us call the present worth of R2 as P3. Hence, **P3** = $\frac{R2}{(1+i)^n} = \frac{1000}{(1+0.1)^{7.5}}$ = **$489.28**

R3 is the replacement cost of pipe in year 10. Let us call the present worth of R3 as P4.

Hence, **P4** = $\frac{R3}{(1+i)^n} = \frac{240}{(1+0.1)^{10}}$ = **$92.53**

M is the annual maintenance cost starting at the end of year 1 till the end of year 15. Let us call the present worth of this uniform series is **P5**. Hence P5 = $M \left[\frac{1}{i} \left[1 - \frac{1}{(1+i)^n} \right] \right] =$

$$80 \left[\frac{1}{0.1} \left[1 - \frac{1}{(1+0.1)^{15}} \right] \right] = \textbf{\$608.49}$$

Step 4: Calculate LCC

The total present worth = LCC = P = P1 + P2 + P3 + P4 + P5

LCC = $7030 + $149.02 + $489.28 + $92.53 + $608.49 = **$8369.32**

Step 5: Calculate ALCC. This gives water cost per year.

$$ALCC = \frac{LCC}{\frac{1}{i}\left[1 - \frac{1}{(1+i)^n}\right]} = \frac{8369.32}{\frac{1}{0.1}\left[1 - \frac{1}{(1+0.1)^{15}}\right]} = \textbf{\$1100.35}$$

Hence the water cost per year is $1100.35.

1.7. Example:

A micro- hydel plant of 1kW power capacity has been installed. Following are the cost involved in installation of the whole system:

Installation cost of the plant = Rs.16000

Cost of mains transmission = Rs.16000 Cost

of distribution transformer = Rs.2500 Cost

of 11 kV line per Kilometer = Rs.4000

Life span of the plant is 25 years. If the rate of interest is 12%, find the unit cost per Kilometer.

Solution:

Step 1: Calculate the capital cost (K)

The problem involves only the initial cost incurred at year 0. There is no replacement cost or maintenance cost involved. Hence, we can calculate the total capital cost just by adding the given quantities. Let K be the capital cost. It is calculated as follows:

K = Rs.16000 + Rs.16000 + Rs.2500 + Rs.4000 x

d Here d is the distance to which 11 kV line runs.

Step 2: Calculate LCC

Since no other costs except capital cost is involved, LCC can be directly calculated. Therefore K= **LCC** = Rs.(**34500 + 4000d**)

Step 3: Calculate ALCC

Annual cost (ALCC) can be calculated from the above data.

$$ALCC = \frac{LCC}{\frac{1}{i}\left[1 - \frac{1}{(1+i)^n}\right]} = \frac{34500 + 4000d}{\frac{1}{0.12}\left[1 - \frac{1}{(1+0.12)^{25}}\right]} = \frac{34500 + 4000d}{7.84314}$$

ALCC = 4398.75 + 510d

Step 4: Calculate energy generated per year

Energy generated per year = 24 hours x 365 days x 1 kW = 8760

kWHr Transmission efficiency η = 30%

Hence, energy available = 8760 x 0.3 = 2628 kWHr

Step 5: Calculate cost per unit (1 unit = 1 kWHr)

$$\textbf{Cost per unit} = \frac{ALCC}{EnergyAvailable} = \frac{4398.75 + 510d}{2628} = \mathbf{1.674 + 0.1941d}$$

We can see that cost per unit depends on the value of d, the distance to which 11 kV line runs. As example, let us calculate cost per unit for d = 5 KM and d = 100 KM

Cost per unit for d = 5 KM : 1.674 + 0.1941 x 5 = Rs.2.64 Cost

per unit for d = 100 KM : 1.674 + 0.1941 x 100 = Rs.21.08.

We can see how adverse effect the distance has on the cost per unit. Hence, care must be taken that we do not run such 11 kV lines for long distances.

Comparison of Alternative Energy Systems using Life Cycle Cost Analysis

Electricity is a major secondary energy carrier and is predominantly produced from

fossil fuels. Challenging concerns of the fossil fuel based power generation are depletion of fossil fuels and global warming caused by greenhouse gases (GHG) from the combustion of fossil fuels. To achieve the goal of environmental sustainability in the power sector, a major action would be to reduce the high reliance on fossil fuels by resorting to the use of clean/renewable sources and efficient generation/use of electricity. Because of the existence of number of alternative energy systems, there is a need of comparing their economic aspects in producing electricity. In order to consider the long-term implications of power generation, a life cycle concept is adopted, which is a cradle-to-grave approach to analyse an energy system in its entire life cycle. Life cycle assessment (LCA) is an effective tool to pinpoint the environmental implications. Life cycle cost analysis (LCCA) provides effective evaluation to pinpoint cost effective alternatives. LCA and LCCA should be combined to identify cost effective power generation alternative scheme. In this paper, for a given energy requirement, a sample comparison was done between solar PV, solar thermal, microhydel, wind, wave and biomass system using the life cycle costing (LCCA) approach.

SOLAR PV

To calculate the life cycle cost per KWh the basic components of a PV system are considered as follows.

2. PV panels
3. Batteries
4. Inverters
5. Charge controllers

We will ignore adding in the cost of the charge controller, since this is only a few hundred dollars (whereas the whole system cost will be in the thousands of dollars).

The user specified variables will be:

1. Peak power required to power appliances
2. Total energy produced/consumed per day
3. Hours of sunshine (average)

Cost of inverter as function of peak power required:

The amount of peak power the system can deliver will be determined by the size of the system inverter , the inverter being the device which converts the dc battery power to ac.

$$P_{peak,\ usage} = P_{peak,\ inverter}$$

As determined by surveying current market prices for inverters, the costs of an inverter are about Rs.50 per watt, or (multiplying by 1000):

$$Cost_{inverter} = \text{Rs. } 50000/\text{kilowatt}$$

Thus, the cost of the inverter, as a function of the peak power used, is therefore:

$$Cost_{inverter}\ (P_{peak,\ usage}) = P_{peak,\ usage} \times Cost_{inverter}$$

$$Cost_{inverter} = P_{peak,\ usage} \times \text{Rs. } 50000/\text{kilowatt}$$

Cost of solar panels as a function of energy usage:

The peak power produced by the solar panels is determined by the type and number of solar panels one uses:

$$P_{peak\ panels} = \text{number of panels} \times \text{power per panel}$$

But peak usage is not necessarily equal to peak panel power.

This is because the power generated by the solar panels is stored up over time by batteries, so more peak power (but not energy!) can be delivered by the inverter than is produced by the panels.

$$E_{produced} = E_{used}$$

Also, we need to know how long the sun shines each day on average. Let this be denoted by T_{sun},

T_{sun} = Hours of Sunshine on average.

Using the formula for power and energy (Power = Energy / Time), we have

$$P_{peak\ panels} = E_{used} / T_{sun}.$$

As determined from a survey of current market prices

$$Cost_{panels} = \text{Rs. } 4\ \text{Lakhs/Kilowatt.}$$

$$Cost_{panels} = (E_{used} / T_{sun}) \times \text{Rs. } 4\ \text{Lakhs/kilo-watt}$$

Cost of batteries as a function of energy usage:

The amount of energy stored (by batteries) determines how much energy can be used after dark, or on a rainy day.

The lifetimes of deep cycle batteries are fairly short (3 - 10 years), and depend on how well they are maintained (for example, one needs to avoid overcharging, and overdrawing.

We will assume, in order not to discharge the battery more than 50%, that the batteries

will be able to store twice the amount of energy we use:

$$E_{stored} = 2 \times E_{used}$$

Presently, the cost of batteries is about Rs. 5000 per kilowatt-hour of storage:

$Cost_{batteries}$ = Rs. 5000/kilowatt-hour

The cost of batteries, therefore, *as a function of energy used*, is $Cost_{batteries} = 2 \times E_{used} \times \$100$/kilowatt-hour

Calculation of life cycle cost per KWh:

Todays solar panels are estimated to last atleast 25 years. We will therefore use 25 years as our life time.

1.	PV panel	Rs. 4 Lakhs/KW	25 Years
2.	Inverter	Rs. 50000/KW	25 Years
3.	Battery	Rs. 10000/KWh	5 Years

Let us say i=10%

Capital Cost = 4Lakhs+ 50000+ 10000=Rs. 460000

Replacement Cost = $\frac{10000}{(1+i)^{5}} + \frac{10000}{(1+i)^{10}} + \frac{10000}{(1+i)^{15}} + \frac{10000}{(1+i)^{20}}$

=Rs. 13945/KWh

Maitenance Cost:As we are considering only from generating point of view maintenance cost is negligible part.

Energy Cost: It does not require any external energy (because the system uses sun energy) to produce the electrical energy.

2.8 System sizing

Major issues that arise when designing a system include that the load placed on the system is not constant, that the amount of energy available from the renewable energy source is variable and that technology that best suits site should be implemented (Hove, 2000). Therefore the design has to be iterative using simulation models that can evaluate instantaneous system performance.

Several software tools are available on the market and in research groups to optimize and simulate hybrid energy systems, but it is sometimes difficult to assess the adequacy of these tools to specific tasks. Also, more details are available from the system when performing optimization than at the planning phase. According to http://www.ecs.umass.edu/mie/labs/rerl/hy2/theory/pdf/users.pdf, use of such programs require high expertise and financial resource hence the development of simplified computational methods that are less costly. Also the user does not get an intuitive understanding of the system since figures are just fed into the system, hence the development of simpler home-made models. In the development of these homemade models the user is able to include specific things that one needs to use. A system can be designed with a smaller or larger solar array or battery, or may make more use of the diesel generator. The problem is to find a system that provides an optimal combination of solar array, battery and usage of the diesel engine.

2.8.1 Estimation of Electrical Load

The electrical loads can be estimated if the power used by each appliance is known. The total energy required will depend on this power draw and the operating time of the appliance. Overall electrical loads can be determined by drawing up a list of all items, their power use and their average operating time per day. The total will be used in determining the size and type of system required.

2.8.2 Load Profiles

The load profile has been defined by Karnavas and Papadopoulos (1999) as the power requirements for the demand-side converters (appliance loads) over time. Once energy conservation (demand side management) techniques are used to reduce the electrical load as far as economically possible whilst still providing the required service, the load profile should be determined to decide the type of hybrid system needed to provide power. The load profile may vary by the hour, day, week, month, season, or year. The peak demand spikes can be met from the batteries and the engine generator started and operated at a steady load when the battery state-of-charge drops below a pre-set level.

The most convenient method of determining the load profile of a system is by measuring electricity demand using an energy (kilowatt / kilowatt-hour) meter, and logging the output hourly, or more often, for at least a week, preferably a month or year (seasonal variations). This can be done either manually if someone can read the meter at regular intervals, or a data logger can be used, in which case much more detailed information is available. This will reveal the daily and weekly profiles. If seasonal variations in load are suspected, longer-term (yearly) load monitoring will be required to reveal the seasonal profile (Karnavas and Papadopoulos , 1999)

2.8.3 Photovoltaic Modules: Technician's method

According to Klein (1977) to determine the actual required PV array output, divide the daily energy requirement by the battery efficiency which is usually between 0.70 and 0.95 and depends on the coulombic efficiency of the batteries in both charging and discharging. Generally 0.95 is used for very efficient batteries installed in good conditions and 0.7 for the least efficient batteries.

The author highlights that to work out the output from the array, it is important to know under what conditions the output will be determined, and need to know what the inclination of the array will be. This is measured in peak sun hours, which is dependent on latitude, season and inclination of the array. The scenario generally chosen for solar / generator hybrid systems is the yearly average peak sun hours. If tables of peak sun hours are not available they can be determined from the average of daily total global radiation. To convert daily global radiation (MJ/m_2) to peak sun hours divide by 3.6. The output of the modules will be average annual peak sun hours times the module rating.

To determine the number of modules in the array first work out the number of modules in series

so that the operating voltage is sufficient for battery charging. Divide the system voltage by the nominal operating voltage of each module. To determine the number of modules in parallel the array output required (Ah) is divided by the output of each module (Ah). However this method does not apply in this research as it does not take into account many things and in a hybrid system energy flows need to be known from hour to hour.

2.8.4 Sizing The Charge Controller/ Battery Charger

Generators in renewable systems are used to power the battery charger, particularly during poor weather, or to supply heavy loads. They can be automatically or manually controlled. In most systems, either diesel, petrol or gas driven generators are used (Hove, 2000).

A battery charger converts the AC output to DC for the purpose of battery charging. The battery charger should be selected such that it converts the 240 volt, 50 Hz AC to DC at the required bus voltage of the battery storage bank. It should be able to provide a direct current up to the maximum allowable charge rate of the batteries. The two critical factors to consider when selecting a battery charger are the system voltage and the maximum rate of charge of the batteries. There may not be a battery charger with exactly the maximum current specified so a charger with lower current would be chosen. The most likely available charger would be 24 Volt 60 Amps. The size of the battery charger is determined by the size of the battery bank (Hove, 2000).

A charge controller should be sized to pass the expected continuous current from the array (or sub-array) into the battery, and should be able to withstand temporary peak currents due to sunnier than normal conditions. It is critical that the controller be adequately sized since the costs associated with the controller are much greater than the cost of initially installing a slightly larger controller. A module will normally have a maximum current output which is its rated short circuit current (when battery voltage is low). It is possible for irradiance levels to reach 3000 watts/m²; the short circuit current is normally rated for irradiance levels of 1000 watts/ m². Charge controllers should be sized therefore, to regulate 130% of a module's normal short circuit current. The size of a

controller can be calculated by multiplying the I_{sc} current of a module by the number of modules in parallel and the 1.3 safety factor. Consult with the manufacturers to determine if they have already build a safety factor into their rating value; oversizing by 130% may not be necessary if the controller is already designed to handle higher than rated currents (Beyer, 2003).

2.8.5 Inverter Power

The inverter converts DC power from the battery bank and/or PV array to AC whenever power from diesel generator sets is not available. It changes DC energy stored within the batteries to AC energy, suitable for the standard appliance operating voltage of 240V. An inverter can generally only supply loads up to its kilowatt rating, although all inverters have a surge rating for electrical peaks. This allows for motor starting, or other brief overloads (http://www.energymatters.com.au/renewable-energy/solar-power/stand-alone-power-systems/).

The output power (wattage) of an inverter indicates how much power the inverter can supply during standard operation. It is important to choose an inverter, which will satisfy a system's peak load requirements. Most inverters are able to exceed their rated wattage for limited periods of time. This is necessary since appliances may require many times their rated wattage during start up and the minimum surge requirement may be calculated by multiplying the required wattage by three. Some Inverters have the added advantage that they have a built-in battery charger so that when the batteries need charging from an AC source (generator), the current can be fed into the inverter, changed to DC, and then used to charge the batteries (Behrendorff, 1999).

WHY FREQUENCY AND VOLTAGE CONTROL

The main purpose of an electrical power systems is to efficiently deliver reliable Electricity to consumers.voltage and frequency are the main variables to guarantee the stability.

The simplest electrical power system consists of a single electric generator and a Load.The frequency of the voltage in an electrical generator is directly proportional to the Rotational speed of rotor.According to the relation

Where f=frequency

$f = PN/120$

P=No.of poles in the alternator

N=rotational speed of rotor in r.p.m

An electrical power system consisting of thousands of interconnected generators and loads Behaves much like a simple one generator-load system, with frequency being same for whole interconnected power system.However,there is never a perfect equilibrium between generation and demand and there will be frequency shifts as a resultof the imbalances between generation and demand.

Regarding the first variable necessary to guarantee the stability of an electrical system, there are several reasons why it is desirable to keep frequency in a power system within narrow bounds.

- It ensures that electric motors operate at a virtually constant speed. A fixed speed is required in many consumer applications where an AC electric motor is used to drive a device at an approximately constant rate
- In electronic applications the main frequency can be used as a basis for time varying Processes.
- Transformers are sensitive to frequency variations and may be overloaded if the frequency drifts substantially from the nominal value.
- Finally ,and most importantly in traditional power stations the performance of the generators is dependent on the performance of all the auxulary electric motor drives That deliver fuel and air to the boiler,oil to bearings and cooling services to several systems.If these auxularies under perform due to low speed caused by low frequency,power station output can be reduced.this phenomenon could lead to run away situation with cascade shutdowns and blackouts.

Basic Concepts and Definitions of Power System Stability

Power system stability is the ability of an electric power system, for a given initial operating condition, to regain a state of operating equilibrium after being subjected to a physical disturbance, with most of the system variables bounded so that practically the entire system remains intact . The disturbances mentioned in the definition could be faults, load changes, generator outages, line outages, voltage collapse or some combination of these. Power system stability can be broadly classified into rotor angle, voltage and frequency stability. Each of these three stabilities can be further classified into large disturbance or small disturbance, short term or long term.

Voltage stability

It is the ability of the system to maintain steady state voltages at all the system buses when subjected to a disturbance. If the disturbance is large then it is called as large-disturbance voltage stability and if the disturbance is small it is called as small-disturbance voltage stability. Unlike angle stability, voltage stability can also be a long term phenomenon. In case voltage fluctuations occur due to fast acting devices like induction motors, power electronic drive, HVDC etc then the time frame for understanding the stability is in the range of 10-20 s and hence can be treated as short term phenomenon. On the other hand if voltage variations are due to slow change in load, over loading of lines, generators hitting reactive power limits, tap changing transformers etc then time frame for voltage stability can stretch from 1 minute to several minutes.

The main difference between voltage stability and angle stability is that voltage stability depends on the balance of reactive power demand and generation in the system where as the angle stability mainly depends on the balance between real power generation and demand.

Frequency stability

It refers to the ability of a power system to maintain steady frequency following a severe disturbance between generation and load. It depends on the ability to restore equilibrium between system generation and load, with minimum loss of load. Frequency instability may lead to sustained frequency swings leading to tripping of generating units or loads. During frequency excursions, the characteristic times of the processes and devices that are activated will range from fraction of seconds like under frequency control to several minutes, corresponding to the response of devices such as prime mover and hence frequency stability may be a short-term phenomenon or a long-term phenomenon.

Though, stability is classified into rotor angle, voltage and frequency stability they need not be independent isolated events. A voltage collapse at a bus can lead to large excursions in rotor angle and frequency. Similarly, large frequency deviations can lead to large changes in voltage magnitude.

Each component of the power system i.e. prime mover, generator rotor, generator stator, transformers, transmission lines, load, controlling devices and protection systems should be mathematically represented to assess the rotor angle, voltage and frequency stability through appropriate analysis tools. In fact entire power system can be represented by a set of Differential Algebraic Equations (DAE) through which system stability can be analyzed. In the next few Chapters we will be concentrating on power system components modeling for stability analysis.

GRID INTEGRATION:

No matter what the arguments are, it has been proven that wind power can be successfully integrated with the power grid. The degree of this success and the level of wind penetration varies largely on:

• The design limits of the tie-line—the key design parameters being:

⇒ Voltage levels

⇒ Capacity

⇒ Voltage Regulation

⇒ Tie-line Stability

• Interface standards—mainly related to power quality, which in turn determines the renewable capacity limit. Power Quality issues are:

⇒ Harmonic Distortion

⇒ Voltage Transients and Sags

⇒ Voltage Flicker

⇒ Step Load Voltage

• The firm capacity of the windfarm and the associated wind power dispatch issues.

⇒ Load following

⇒ Scheduling

⇒ Reserve

• Response to abnormal conditions:

⇒ Voltage disturbances

⇒ Faults

A-Z Shiksha

STABILITY LIMIT

- The direction of the power flow across the Tie-Line depends on the sending and receiving end voltages.

• The magnitude of the real power transferred by the Tie-line depends on the power angle δ (the phase angel between V_s and V_r). If $\delta > 0$, the power flows from the windfarm to the grid. When $\delta < 0$, the windfarm draws power from the grid.

• The power flow is maximum when $\delta = 90^o$

• Beyond this maximum power (P_{max}), the Tie-Line becomes unstable and will lose synchronism. This is referred to as the steady state stability limit of the system.

• In practice, the line loading must be kept well below P_{max}, to allow for transients such as sudden load steps and system faults. The maximum power the line can transfer without losing the stability during transients is referred to as the dynamic stability limit.

• In typical systems, the power angel must be kept below 20º to assure dynamic stability.

POWER QUALITY

The rapid increase in the demand of power, depletion of fossil fuel and environmental threat to sustainable development are the basic reasons for the swift development in the field of Renewable Energy (RE) sector. Hence, the concept of micro-grid , which uses energy sources such as photovoltaic (PV), wind turbine (WT) and fuel cell (FC) came in to picture. These energy sources are positioned in the load center and can be seamlessly connected or disconnected to the low voltage utility grid. Due to intermittent nature of RE sources, more than one source is generally combined to form a HPS. These sources uses power conditioning devices like, DC-DC boost converter to raise the voltage level to nominal value or a DC-AC converter to integrate the resources to the utility grid. However, the proliferation of these power electronics switching devices introduces an alarming concern among the industrial energy customer and also to the utility grid; this is termed as PQ issues Among the various PQ issues notices so far, voltage transients, voltage sag and swell, harmonic distortion and flicker are of key concerns. In a view to improve the power quality a new methodology was suggested in which replaces the inverter by a DC motor -Alternator set to integrate the RE sources. In this framework, an attempt is made to measure and compare the various PQ indices for HPS model with the two different modes of grid integration, i.e. inverter mode and its counterpart i.e. a DC motor –Alternator set mode of grid integration. Various PQ indices such as voltage variation, voltage sag and swell, voltage imbalance, flicker, Total Harmonic Distortion (THD) are measured at the consumer terminal by using both integration schemes. Simulation results indicate that the quality of power injected into the grid by means of a MG set is superior to that coming from inverter.

POWER QUALITY PARAMETERS AND TERMINOLOGYS:-

Power quality is a measure of various parameters like voltage current and frequency within its predefined range. If there has any deviation generated various problems like voltage sag, voltage swell, transient, flicker, harmonics etc. which can be responsible for poor power quality.

***Transient*:** - transient are short duration and sudden disturbances which can cause by a very rapid change in the steady state condition of voltage current or both. Transient disturbance is classified in to two categories oscillatory transient and impulsive transient.

short duration voltage variation: - in any supply voltage if there has any variation for very short time not more than 1 minute is called a short duration voltage variation. For the short duration voltage variation faults, energization of large loads intermittent loose connection in power wiring is responsible. Short duration voltage variation is classified into three categories as voltage sag voltage swells and interruptions.

long duration voltage variation: - for larger than 1 minute the voltage deviation surrounding the rms (root mean square) value of power frequency is called long voltage variation. Long duration voltage variations are classified in 3 categories as over voltage, under voltage and sustained interruptions.

wave form distortion: - the voltage and current waveform of healthy power supply are ideal sine wave .if there power frequency wave form has any steady state deviation is called wave form distortion. Wave form distortion is classified in to following categories .dc offset, harmonics, inter harmonics, notching, and noise.

voltage fluctuations: - the systematic random variation of voltage envelop is called voltage fluctuation. The main course of voltage variation is rapid change in current magnitude of load. A very rapid change of supply voltage. is called voltage flicker which is a type of voltage fluctuations.

3.6 power frequency variations :- for the satisfactory operation of any power system an fundamental frequency is predefined .in case there has any variation in its specified nominal value (e.g. 50 to 60 Hz) is called power frequency variation..rapid changes in the load which is connected in the system is responsible for power frequency variation .

WINDFARM CAPACITY LIMIT:

Most utilities are faced with the issue of compatibility of wind farms for interfacing with the grid from the power quality point of view. The basic consideration in such decision is the source impedance before and after making the connection. This is often and otherwise referred to as the avail- able short-circuit MVA at the point of interconnection—also known as the system stiffness or the fault level.

- The higher the fault level, the stiffer the network
- A minimum grid stiffness in relation to the wind power capacity is required to maintain the power quality of the resulting network
- Not only is the magnitude of the equivalent source impedance of the two systems important, the resistance(R), and the reactance (X) components of this impedance have their individual importance.
- The system fault current decays exponentially as e^t/(X/R)
- High X/R ratios cause fault currents to decay slowly, making protective relaying more difficult.
- The X/R ratio influences voltage regulation, which may place a limit on the continuous maximum load the wind farm can deliver. The acceptable voltage regulation is typically 5 to 7%.

Interfacing Standards:

- Utilities have found it convenient to meet the power quality requirements by limiting the wind farm capacity to a small percentage of the short-circuit MVA of the grid at the point of interconnection.
- This limit is usually 2 to 5%
- Yet another rule of thumb to address the power quality issues for stiff grids has been to keep the wind farm capacity in MW to less than the grid line voltage in kV.
- In the case of weak grids, only 10 to 20% of the above capacity may be allowed.
- It is complex to determine the maximum wind plant capacity at a given site, which will meet all electrical, operating and power quality requirements. The percentage of the short-circuit MVA at the point of interconnection, in the absence of more rigorous standards and simulation tools, is recommended.