ResearchGate

See discussions, stats, and author profiles for this publication at: https://www.researchgate.net/publication/270469165

Energy integration of nitric acid production using Pinch methodology

Article *in* Hemijska industrija · January 2014

DOI: 10.2298/HEMIND140204039I

CITATION
1

READS
11,113

4 authors, including:

Gorica R. Ivaniš
University of Belgrade
24 PUBLICATIONS **417** CITATIONS

SEE PROFILE

Ivona Radovic
Faculty of Technology and Metallurgy, University of Belgrade
89 PUBLICATIONS **1,310** CITATIONS

SEE PROFILE

Mirjana Kijevcanin
University of Belgrade
158 PUBLICATIONS **2,367** CITATIONS

SEE PROFILE

Some of the authors of this publication are also working on these related projects:

Project

Organic Rankine Cycle system performance targeting and design for multiple heat sources with simultaneous working fluid selection View project

Project

New industrial and environmental aspects of chemical thermodynamics to improve chemical processes with multiphase and multicomponent systems, Ministry of Education, Science and Technological Development of the Republic of Serbia View project

All content following this page was uploaded by Ivona Radovic on 15 March 2016.

The user has requested enhancement of the downloaded file.

Energy integration of nitric acid production using Pinch methodology

Gorica R. Ivaniš[1], Marija Lazarević[2], Ivona R. Radović[1], Mirjana Lj. Kijevčanin[1]

[1]*University of Belgrade, Faculty of Technology and Metallurgy, Belgrade, Serbia*
[2]*Galenika Fitofarmacija, Belgrade, Serbia*

Abstract
Pinch methodology was applied to the heat exchangers network (HEN) synthesis of nitric acid production. The integration is analyzed in two ways, and the results are presented as two different solutions: *i*) the first solution is based on the original heat transfer equipment arrangement and *ii*) in order to eliminate the shortages of the first solution the second HEN was obtained using process simulation with optimized process parameters. Optimized HEN, with new arrangement of heat exchangers, gave good results in energy and process optimization.

Keywords: Pinch methodology, energy integration, minimum temperature difference, nitric acid production, total costs.

Available online at the Journal website: http://www.ache.org.rs/HI/

PROFESSIONAL PAPER

UDC 661.56:66.011

Hem. Ind. **69** (3) 261–268 (2015)

doi: 10.2298/HEMIND140204039I

Synthesis of heat exchanger networks allows significant reduction in energy requirements [1–6], and it is one of the main research areas in energy optimization in the past decades. Consequently the high number of methods for process and energy optimization and integration were developed. One of the most efficient methods for energy optimization is Pinch methodology, based on heat exchangers network (HEN) optimization, and leading to industrial processes optimization and efficient energy utilization of industrial systems.

Pinch methodology is very suitable for a detailed energy analysis of the process, but also for comparison of different alternative networks solutions [7–15].

The aim of this work is to analyze the nitric acid production and to present the optimal solution for the energy integration of the investigated process. Nitric acid is very important product of the chemical industry. It is a process with high energy consumption, and with units based on high energy demands, such as the heat exchangers, heaters and refrigerators. Heat exchangers network along with available utilities represent the part of the industrial systems where process costs can be significantly reduced by optimizing process parameters. In this paper comparison of the two HENs was performed: one, based on parameters proposed in the literature [1] and other, the optimized solution based on adjusted process data.

Heat integration methods

In late 70s B. Linnhoff and T. Umeda [15] and their coworkers found a "bottleneck of heat exchange" or Pinch point, when they were analyzing the heat transfer in the process. Since then, the Pinch methodology was introduced in process analysis. This method represents an extremely useful tool for analysis and process and energy synthesis. Pinch methodology is a sequential graphical HENs method based on the first law of thermodynamics and some constrains originated from the second law of thermodynamics [3].

In industrial processes, the heat is transferred between process of hot and cold streams or between process of streams and utilities (fluids used for additional heating or cooling, such as steam, cooling water, etc.). In order to save energy, there is a tendency to design an industrial process where maximum heat amount is being transferred between process streams, so the needs for external heating and cooling are minimized. This is accomplished by optimizing the existing HEN, which is the main goal of Pinch methodology. In addition to energy savings, better thermal process integration reduces a number of process units (heat exchangers or others) and leads to additional financial savings.

Pinch method also could be presented with hot and cold streams composite curves or grand composite curves [1–15], constructed on the process streams and their thermo-physical parameters. At the Pinch point composite curves are closest to each other and temperature between them is minimum temperature difference (ΔT_{min}). Pinch point divides process into two parts. The area above the Pinch can be considered as heat sink, which means it only receives the heat from external heat source ($Q_{h,min}$), while area below the Pinch presents process heat source and requires external heat sink ($Q_{c,min}$) [16].

Data required for the energy networks analysis are: source and target temperatures of process streams, heat transfer flow rate or enthalpy changes of process

Correspondence: M.Lj. Kijevčanin, University of Belgrade, Faculty of Technology and Metallurgy, Karnegijeva 4, Belgrade, Serbia.
E-mail: mirjana@tmf.bg.ac.rs
Paper received: 4 February, 2014
Paper accepted: 24 April, 2014

streams. Inlet (source) temperatures are those temperatures at which a fluid is available in the process.

Heating and cooling demands of each stream is determined based on the heat capacity flow rate *CP* (kW/°C), defined as:

$$CP = mc_p \quad (1)$$

and for the hot and cold streams' matches in the area above the Pinch heat capacity flow rate of process streams shall follow the rule:

$$CP_h \leq CP_c \quad (2)$$

while in the area below the Pinch the opposite rule applies:

$$CP_h \geq CP_c \quad (3)$$

Also, in the cases where there are no matches between streams that follow the *CP* rules, the appropriate rule could be fulfilled by splitting hot stream in two or more branches above Pinch, or cold stream below Pinch point.

In this paper, HINT software [17] was used for the HEN design of nitric acid production in Petrochemical Industry-Kutina, located in Croatia [1,2] with simplified process flow diagram presented in Figure 1 [1]. This process includes 17 heat exchangers, 2 turbines (steam or gas driven), 2 compressors, 3 filters, 2 separators and 3 reactors. Boilers are used for the high pressure steam production. For the additional heating and cooling requirement, for 16 process streams, the medium pressure steam (12.2 bar), low pressure steam (4.4 bar), cooling water and boiler feed water are available.

The liquid ammonia flows into the evaporator where it evaporates by the indirect steam heating (in heat exchangers E103, E112 and E113), as shown in Figure 1. For the drops or impurities removal the ammonia vapour passes through a filter (F102), and finally vapour stream is at 8.1 bar. On the other hand, air is compressed (C101) to the same pressure, heated to a temperature of 200–300 °C, and purified in the filter (F101) before mixing with ammonia. Gaseous mixture containing about 10% of ammonia is prepared before the reaction that takes place in the reactor (R101).

The product of the catalytic oxidation of ammonia is hot gaseous mixture containing NO, steam and non-reacted components of air, nitrogen and oxygen. Yield achieved at 8.1 bar is 95%, while at atmospheric pressure it reaches 97–98%. The resulting gaseous mix-

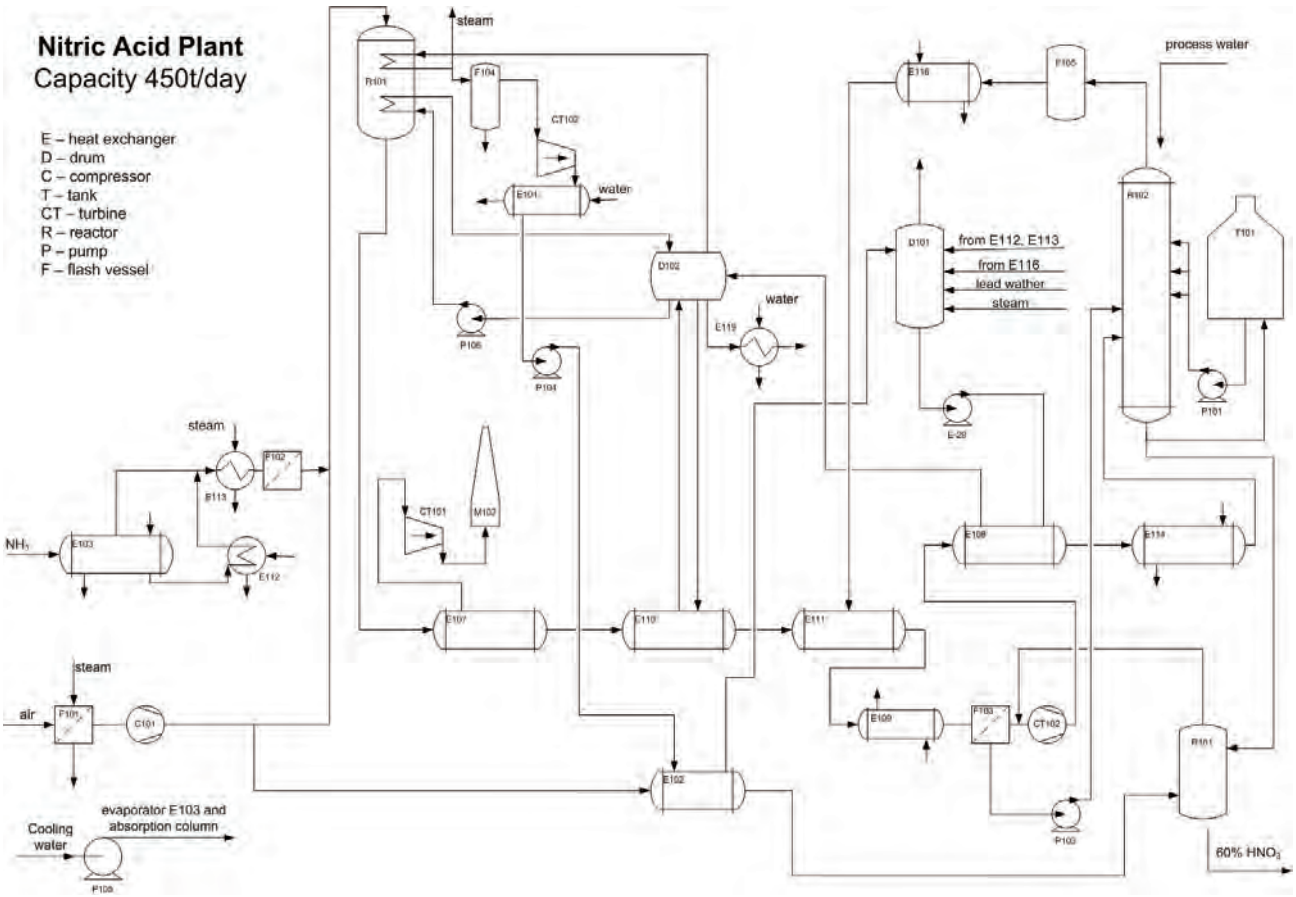

Figure 1. Process flow diagram of nitric acid synthesis plant.

ture is cooled in heat exchangers (E107, E110 and E111) and the released energy is used for steam production. Obtained steam is used for ammonia and air preheating. Cooling the mixture to a moderate temperature allows regeneration of the catalyst.

After catalyst regeneration gas blend is rapidly cooled further in the condenser (E109) to the temperature of 50 °C. Absorption of nitrogen oxides in the water leads to the formation of diluted nitric acid whose concentration is 2–30% and it is introduced to the top of the absorption tower (R102). The cooled gaseous mixture, containing NO, NO_2, N_2O_4 and a non-reacted part of N_2 and O_2 from air, is inlet in the lower part of the absorber. In the absorber the remaining NO is oxidized to NO_2 and N_2O_4 with the simultaneous absorption of NO_2 in water, and this stream is also inlet into the absorber. An additional quantity of air is necessary in order to complete the oxidation of NO. If the absorption is performed at atmospheric pressure, concentration of produced nitric acid is about 45–50%, while at raised pressures the acid concentration could be up to 70% [18–20].

Table 1 presents all data [2] of the above described process used for the further energy integration.

RESULTS AND DISCUSSION

The first step in our analysis was synthesis of the HEN based on the original data proposed by Matijašević and Otmačić [1].

Originally proposed ΔT_{min} = 38 °C was used for energy cascade and for the matches between all considered process streams, and based on that minimum heating and cooling demands are determined:

- minimum heating demand: $Q_{h,min}$ = 0.48 kW. Since obtained value is very small, it could be considered as a consequence of slightly incorrect flow measurements and it was neglected in further analysis,
- minimum cooling demand: $Q_{c,min}$ = 25114.7 kW and
- Pinch temperature is 277 °C ($T_{P,}$h = 296 °C and $T_{P,c}$ -= 258 °C).

Diagrams of grand composite curve for this process are shown in Figure 2.

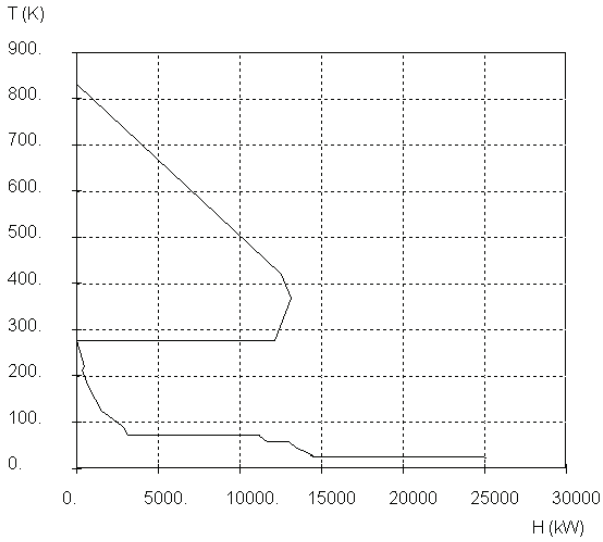

Figure 2. Grand composite curve.

Next step in heat integration is HEN synthesis, and according to the original scheme – process contains 17 units used for heat transfer (9 heat exchangers and 8 coolers). As mentioned above, process does not require

Table 1. Process streams data [2]

Stream	Description	Type	T_s / °C	T_t / °C	ΔH / kW	CP / kW °C^{-1}
1	$NH_{3,l}$	Cold	8.5	8.5	133.5	-
2	$NH_{3,g}$	Cold	8.5	100.0	366.0	4.0
3	LP NO*x*	Hot	850.0	90.0	-23104.0	30.4
4	H_2O_g	Hot	90.0	90.0	-8033.1	-
5	$NO_{x\ mix\ l,g}$	Hot	90.0	38.0	-1809.6	34.8
6	HP NO_x	Hot	232.0	76.0	-4695.6	30.1
7	H_2O_{steam}	Hot	76.0	76.0	-1296.5	-
8	$NO_{x\ mix\ l,g}$	Hot	76.0	46.0	-876.0	29.2
9	Top gases	Cold	25.0	350.0	7475.0	23.0
10	Secondary air	Hot	194.0	120.0	-355.2	4.8
11	HP steam	Cold	258.0	400.0	2584.4	18.2
12	Steam condensate	Hot	44.0	44.0	-10467.5	-
13	HP steam	Cold	258.0	258.0	12150.2	-
14	Turbine condensate	Cold	50.0	70.0	360.0	18.0
15	Boiler feedwater	Cold	105.0	200.0	2631.5	27.7
16	Cooling water	Hot	255.0	50.0	-164.0	0.8

additional heating so in a grid diagram there are no heaters, as it is shown in Figure 3.

Since all data were extracting from process flowmeters, due to some inconsistency, and in order to obtain more realistic network, some corrections were made [1]:

- Heat capacity flow rate (mass flow rate) of stream 11, *CP*, is adjusted from 18.2 to 18.14 kW/°C. As a consequence, enthalpy of this stream is reduced from 2584.4 to 2575.88 kW. Accordingly, the minimum heating demands (0.48 kW) were neglected.

- Heat capacity flow rate of stream 10 is corrected from 4.8 to4.865 kW/°C, and in this way enthalpies of streams 10 and 14 are equalled and these streams are efficiently linked through exchanger number 6 with capacity of 360 kW. An important note is that exchanger 7, which connects streams 6 and 15, has temperature difference between hot and cold stream smaller than ΔT_{min} = 38 °C. Minimum temperature difference for exchanger 7 is 32 °C [2].

The summary of the obtained results is presented in Table 2.

Based on the analysis of the given HEN it can be concluded that exchanger 5 (connecting streams 3 and 9) transfers heat through Pinch point.

In order to have comprehensive insight in heat transfer optimization, capital costs and heating and cooling demands were also simultaneously analyzed. The total costs of HEN can be calculated based on capital and energy costs.

Energy costs could be calculated as:

$$\text{Total energy costs} = \Sigma Q_u C_u \tag{4}$$

In the considered case, the hot utility requirement is 5359.48 kW and this roughly corresponds to the amount of heat that is transmitted through "pinch". Cooling water demand (cold utility) is 25115.7 kW.

Utility costs are [21]:

- steam costs: 296.64 $/(kW year);
- cooling water costs: 221.76 $/(kW year).

Using all the above mentioned parameters total energy costs could be calculated as:

- heating costs; 359.48 kW×296.64 $/(kW year) = = 1 589 836.15 $/year;
- cooling costs: 25115.7 kW×221.76 $/(kW year) = = 5 569 657.63 $/year;
- total energy costs: 1 589 836.15 + 5 569 657.63 = = 7 159 493.78 $/year.

Value of capital costs depends on economic factors such as interest on loan, payback time, investment factors, etc. Total capital costs are calculated using equations:

$$C(\$) = [N_{min}\{a + b(A_{min}/N_{min})^c\}]_{AP} + [N_{min}\{a + b(A_{min}/N_{min})^c\}]_{BP} \tag{5}$$

or

$$C(\$)_{RT} = a + bA^c \tag{6}$$

It should be noted that if ΔT_{min} increases heat that is transferred within the system decreases and therefore lower heat transfer area is required, and leads to the

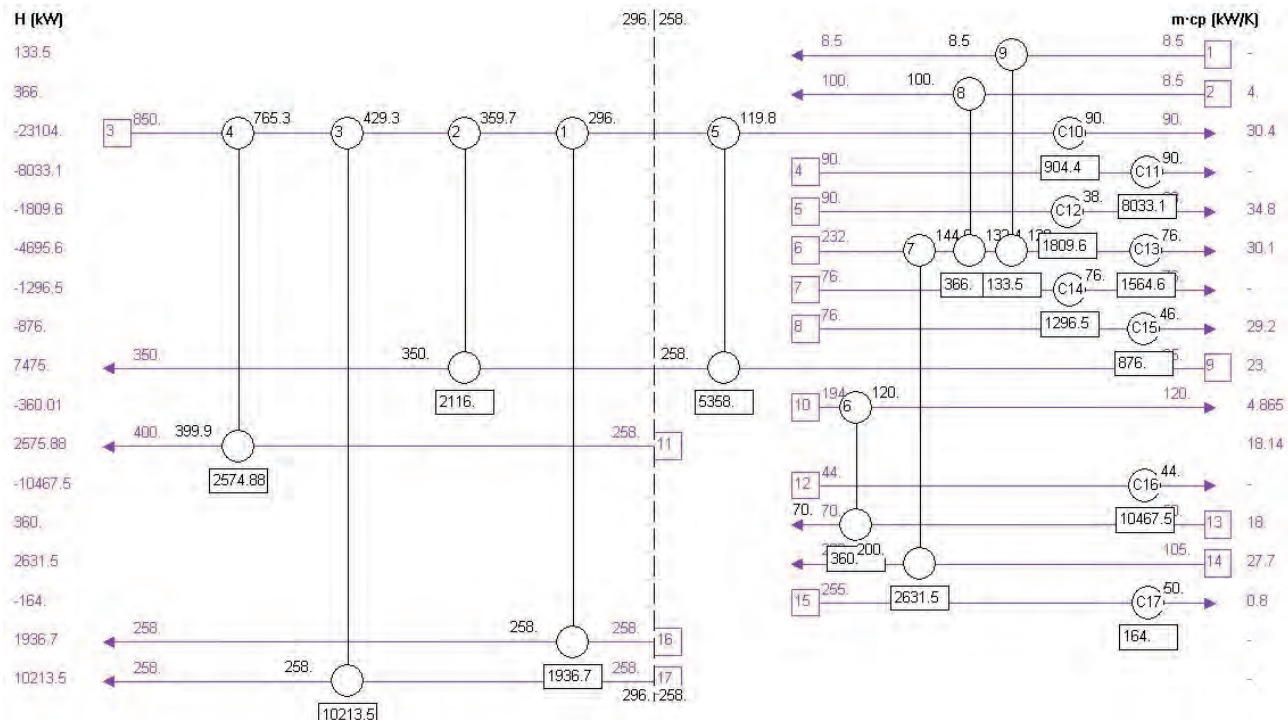

Figure 3. HEN based on original data of nitric acid production process [2].

Table 2. Parameters of heat exchangers and coolers used for cost calculations in the first solution [1]

HE	Transfered heat, kW	Hot stream (h)	$T_{h,s}$ / °C	$T_{h,t}$ / °C	Cold stream (c)	$T_{c,s}$ / °C	$T_{c,t}$ / °C	Required heat transfer area, m^2	Costs, $
1	1936.7	3	359.7	296.0	16	258.0	258.0	29.93	12630
2	2116.0	3	429.313	359.7	9	258.0	350.0	23.50	12070
3	10213.5	3	765.283	429.3	17	258.0	258.0	33.00	12900
4	2574.9	3	850.0	765. 3	11	258.0	399.9	5.39	10470
5	5358.0	3	296.0	119.8	9	25.0	258.0	86.22	17590
6	360.0	10	194.0	120.0	13	50.0	70.0	3.81	10340
7	2631.5	6	232.0	144.6	14	105.0	200.0	73.81	16500
8	366.0	6	144.6	132.4	2	8.5	100.0	4.72	10420
9	133.5	6	132.4	128.0	1	8.5	8.5	1.10	10100
10	904.4	3	119.8	90.0	Utility	-	-	10.77	10950
11	8033.1	4	90.0	90.0	Utility.	-	-	114.76	20100
12	1809.6	5	90.0	38.0	Utility.	-	-	47.26	14160
13	1564.6	6	128.0	76.0	Utility	-	-	19.76	11740
14	1296.5	7	76.0	76.0	Utility	-	-	23.15	12040
15	876.0	8	76.0	46.0	Utility	-	-	22.40	11970
16	10467.5	12	44.0	44.0	Utility	-	-	436.15	48380
17	164.0	15	255.0	50.0	Utility	-	-	1.65	10140

decreasing of the capital costs (if c < 1). On the other hand, if ΔT_{min} increases the requirement for the additional heat transfer utilities increases (energy costs increase and there is higher external energy demand). When these two types of costs with the opposite trends are summed the total costs could be obtained. Illustrative curve of total cost is presented in Figure 4.

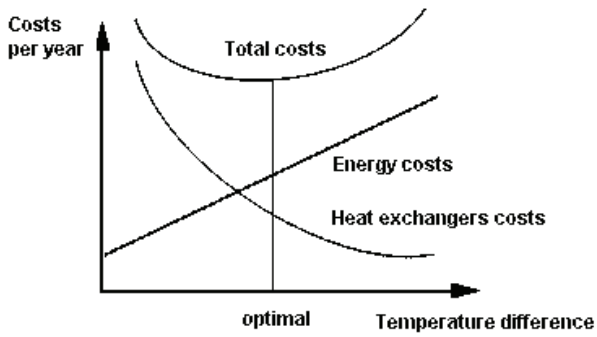

Figure 4. Total costs vs. ΔT_{min}.

Capital costs were calculated using Eq. (6), with the values of constants a = 10000, b = 88 and c = 1 [22] for the heat transfer area from 10 to 1000 m^2.

Finally, total costs of the HEN are calculated by summing total capital costs and total energy costs. Total costs are 252,500 + 7,159,493.78 = 7,411,993.78 $/year.

Further analysis of the process is performed due to the problem in ΔT_{min} noticed in the first solution, and consequently the second solution will be proposed.

Since optimal value of ΔT_{min}=38 °C also is adopted in this case, overall heating and cooling demands remained the same. Therefore, the same corrections of heat capacity flow rates of streams 10 and 11 were performed in this case as in the previous solution. Since our goal was to maintain ΔT_{min} at the optimal values, some rearrangements of the stream connections were performed, as it is shown in Figure 5. For the area above the Pinch, stream connections are similar to the one from the previous solution, except that stream 13 is not divided. For the area bellow the Pinch for the optimal HEN, the heat exchanger number 4 was considered, but with adjusted ΔT_{min} to the optimal value of 38 °C.

In this way, comparing to the first solution given in the text above, the heat transfer through the Pinch is avoided.

The summary of the obtained results is presented in Table 3.

According to the obtained results the total heating demands are 0 and total cooling demands are 27,688.3 KW.

Using data found for the second solution, the next results were obtained:

- heating demands are equal to 0;
- cooling costs is: 27,688.3 kW×221.76 $/(kW year) = 6,140,157.41 $/year;
- Total energy cost is equal to the cooling costs.

Total annual capital costs are 251,220 $/year. Finally, summing total capital and total energy costs total annual costs are 251,220 + 6,140,157.41 = 6,391,377.41 $/year.

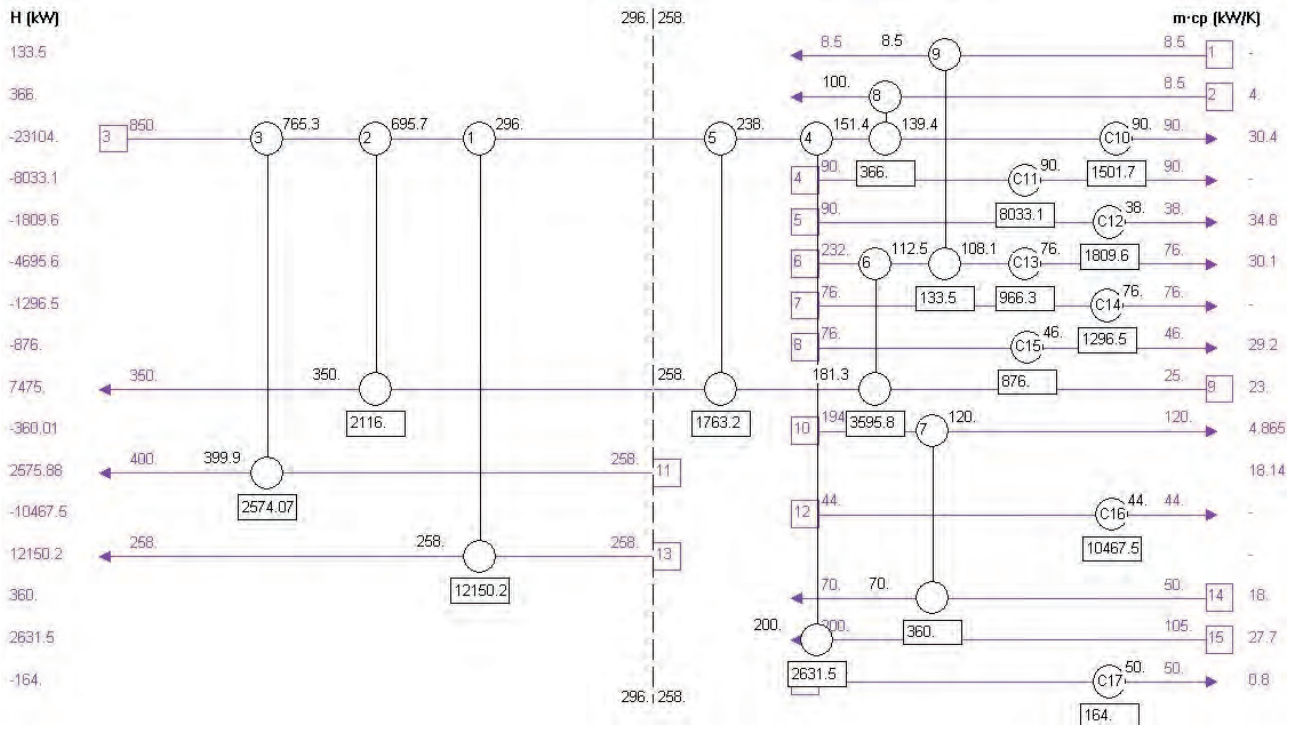

Figure 5. Optimized HEN of nitric acid production process.

Table 3. Parameters of heat exchangers and coolers used for cost calculations in optimized solution

HE	Transfered heat, kW	Hot stream (h)	$T_{h,s}$ / °C	$T_{h,t}$ / °C	Cold stream (c)	$T_{c,s}$ / °C	$T_{c,t}$ / °C	Required heat transfer area, m^2	Costs, $
1	12150.2	3	695.7	296.0	13	258.0	258.0	74.29	16540
2	2116.	3	765. 3	695.7	9	258.0	350.0	4.96	10440
3	2574.1	3	850.0	765.3	11	258.0	399.9	5.38	10470
4	2631.5	3	238.0	151.4	15	105.0	200.0	62.54	15500
5	1763.2	3	296.0	238.0	9	181.3	258.0	37.75	13320
6	3595.8	6	232.0	112.5	9	25.0	181.3	53.33	14690
7	360.0	10	194.0	120.0	14	50.	70.0	3.81	10340
8	366.0	3	151.4	139.4	2	8.5	100.0	4.30	10380
9	133.5	6	112.5	108.1	1	8.5	8.5	1.31	10120
10	1501.7	3	139.4	90.0	Utility	-	-	16.23	11430
11	8033.1	4	90.0	90.0	Utility.	-	-	114.76	20100
12	1809.6	5	90.0	38.0	Utility	-	-	47.26	14160
13	966.3	6	108.1	76.0	Utility	-	-	13.64	11200
14	1296.5	7	76.0	76.0	Utility	-	-	23.15	12040
15	876.0	8	76.0	46.0	Utility	-	-	22.40	11970
16	10467.5	12	44.0	44.0	Utility	-	-	436.15	48380
17	164.0	16	255.0	50.0	Utility	-	-	1.65	10140

CONCLUSION

Aim of this work was to show utilization of the Pinch methodology and heat exchangers network synthesis on the reduction of the process heating and cooling demands. The HEN is applied to the nitric acid production in the plant Petrochemical Industry-Kutina, located in Croatia.

Results of two different HENs are presented: the first one presents established HEN, but with some deviations from the Pinch rules [1], while the second strictly follows all rules of Pinch methodology. In both cases the total number of equipment used for heat

transfer is the same (totally 17) and in the both HENs additional process heating is not required.

In the first solution the minimum temperature difference between hot and cold streams in all process matches is not defined as optimal heat transfer through the Pinch point, so inorder to avoid those shortcomings a different arrangement of heat exchangers is made in the second solution.

According to the obtained results, designing the HEN with new heat exchanger arrangement leads to improved results, and annual saving of about 14 %. This proves that using the Pinch methodology and better process and energy integration could lead to the significant energy and financial savings for each industrial plant.

Nomenclature

CP – heat capacity flowrate
$Q_{,h\,min}$ – minimum heating demands
$Q_{c\,,min}$ – minimum cooling demands
Q_u – utility demands
C_u – costs of utilities
C – capital costs
N_{min} – minimum number of units
A_{min} – minimum required heat transfer area
A – heat transfer area
a, b, c – heat exchangers cost parameters
T - temperature
HE – heat exchanger

Subscripts

t – target conditions
s – source conditions
c – cold stream
h – hot stream.

Acknowledgement

The authors gratefully acknowledge the financial support received from the Research Fund of Ministry of Education, Science and Technological Development, Serbia, and the Faculty of Technology and Metallurgy, University of Belgrade (Project no. 172063).

REFERENCES

[1] Lj. Matijašević, H. Otmačić, Energy recovery by pinch tehnology, Appl. Therm. Eng. **22** (2002) 477–484.

[2] Lj. Matijašević, Toplinska analiza procesa - I. Sinteza mreže izmjenjivača topline pinch postupkom, Hem. Ind. **55** (2006) 403–412.

[3] L. Sun, X. Luo, Synthesis of multipass heat exchanger networks based on pinch technology, Comput. Chem. Eng. **35** (2011) 1257–1264.

[4] R. Smith, State of the Art in Process Integration, Appl. Therm. Eng. **20** (2000) 1337–1345.

[5] F.X.X. Zhu, L. Vaideeswaran, Integration in Analysis and Optimization of Energy. Systems, Appl. Therm. Eng. **20** (2000) 1381–1392.

[6] K.C. Furman, N.V. Sahinidis, A critical review and annotated bibliography for heat exchanger network synthesis in the 20th century, Ind. Eng. Chem. Res. **41** (2002) 2335-2370.

[7] M. Kijevčanin, B. Đorđević, O. Ocić, M. Crnomarković, M. Marić, S. Šerbanović, Energy and economy savings in the process of methanol synthesis using pinch technology, J. Serb. Chem. Soc. **69** (2004) 827–837.

[8] R. Domenichini, M. Gallio, A. Lazzaretto, Combined production of hydrogen and power from heavy oil gasification: Pinch analysis, thermodynamic and economic evaluations, Energy **35** (2010) 2184–2193.

[9] F. Friedler, Process integration, modelling and optimisation for energy saving and pollution reduction, Appl. Therm. Eng. **30** (2010) 2270–2280.

[10] S. Fujimoto, T. Yanagida, M. Nakaiwa, H. Tatsumi, T. Minowa, Pinch analysis for bioethanol production process from lignocellulosic biomass, Appl. Therm. Eng. **31** (2011) 3332–3336.

[11] M. H. Panjeshahi, E. G. Langeroudi, N. Tahouni, Retrofit ammonia plant for improving energy efficiency, Energy **33** (2008) 46–64.

[12] X. Feng, J. Pu, J. Yang, K.H. Chu, Energy recovery in petrochemical complexes through heat integration retrofit analysis, Appl. Energy **88** (2011) 1965–1982.

[13] C. Bengtsson, R. Nordman, T. Bemtsson, Utilization of excess heat in the pulp and paper industry – a case study of technical and economic opportunities, Appl. Therm. Eng. **22** (2002) 1069–1081.

[14] M. De Monte, E. Padoano, D. Pozzetto, Waste heat recovery in a coffee roasting plant, Appl. Therm. Eng. **23** (2003) 1033–1044.

[15] P. Rašković, S. Stoiljković, Pinch design method in the case of a limited number of process streams, Energy **34** (2009) 593–612.

[16] http://www.rossiters.org/associates/images/pinch-curve.jpg (accessed 30.12.2013).

[17] A. Martin, F. A. Mato, Hint: An educational software for heat exchanger network design with the pinch method, Education for Chem. Eng. **3** (2008) e6–e14.

[18] Available and Emerging Technologies for Reducing Greenhouse Gas Emissions from the Nitric Acid Production Industry, U.S. Environmental Protection Agency Research, Triangle Park,NC, 27711, 2010, p3–p7.

[19] http://www.epa.gov/ttnchie1/ap42/ch08/final/c08s08.pdf (accessed 10.12.2013).

[20] http://www.fertilizerseurope.com/fileadmin/user_upload/publications/tecnical_publications/guidence_techn_documentation/EFMABATNIT.pdf (accessed 10.12.2013).

[21] S.-G. Yoon, J. Lee, S. Park, Heat integration analysis for an industrial ethylbenzene plant using pinch analysis, Appl. Therm. Eng. **27** (2007) 886–893.

[22] G. Towler, R. Sinnott, Chemical Engineering Design, Principles, Practice and Economics of Plant and Process Design, Elsevier, London, 2008.

IZVOD

ENERGETSKA INTEGRACIJA PROIZVODNJE AZOTNE KISELINE PRIMENOM *PINCH* METODOLOGIJE

Gorica R. Ivaniš[1], Marija Lazarević[2], Ivona R. Radović[1], Mirjana Lj. Kijevčanin[1]

[1]*Univerzitet u Beogradu, Tehnološko-metalurški fakultet, Beograd, Srbija*
[2]*Galenika Fitofarmacija, Beograd, Srbija*

(Stručni rad)

U ovom radu je pokazano kako se primenom *Pinch* metodologije omogućava smanjenje ukupnih zahteva za dodatnim grejanjem i hlađenjem unutar procesa. Primenom *Pinch* metodologije analizirana je mreža razmenjivača toplote u postrojenju za proizvodnju azotne kiseline u Petrohemijskoj industriji-Kutina u Hrvatskoj. Razmenjivači toplote, grejači i hladnjaci, zajedno sa procesnim strujama koje se greju i hlade, čine mrežu razmenjivača toplote. Pored procesnih struja i razmenjivača toplote koji služe za razmenu toplote između procesnih struja, u razmatranje se uključuju i pomoćni medijumi za grejanje i hlađenje. Ova analiza može dovesti do znatnih energetskih i ekonomskih ušteda unutar postrojenja. U ovom radu sinteza mreže razmjenjivača toplote u postojenju za proizvodnju azotne kiseline je izvršena korišćenjem programskog paketa HINT. U radu su prikazana dva rešenja energetske integracije: *i*) rešenje bazirano na originalnim podacima i pristupu datom u literaturi [11] i *ii*) rešenje zasnovano na procesnim parametrima nešto izmenjenim u cilju poboljšanja integracije. U oba rešenja broj instalisanih uređaja za razmenu toplote je 17. Predložena optimalna vrednost minimalne razlike temperatura toplih i hladnih struja od 38 °C je zadržana u drugom rešenju, dok je u prvom, kako je to detaljno prikazano u rezulatima, u pojedinim delovima mreže ova vredbost izmenjena. Zadržavanjem optimalne minimalne razlike temperatura unutar procesa, kao i drugačijim rasporedom aparata, izbegnuto je i prenošenje toplote kroz *Pinch* u drugom rešenju. U oba slučaja se ne zahteva dodatno grejanje procesnih struja, tako da se ne koriste pomoćni fluidi za grejanje. Dobijeni rezultati pokazuju da su ukupni troškovi rada postrojenja na godišnjem nivou smanjeni za oko 14% što je jasan dokaz da se primenom *Pinch* metodologije i boljom energetskom integracijom procesa mogu postići značajne finansijske uštede u industrijskim postrojenjima.

Ključne reči: *Pinch* metodologija • Energetska integracija • Minimalna razlika temperatura • Proizvodnja azotne kiseline • Ukupni troškovi

View publication stats