ISSN 2517-7516, Membranes and Membrane Technologies, 2019, Vol. 1, No. 2, pp. 72–80. © Pleiades Publishing, Ltd., 2019.
Russian Text © M.D. Karaseva, M.M. Trubyanov, A.A. Atlaskin, I.V. Vorotyntsev, N.I. Laguntsov, P.N. Drozdov, 2019, published in Membrany i Membrannye Tekhnologii, 2019, Vol. 1, No. 2, pp. 90–100.

Trace Water Removal from Nitrous Oxide in a Membrane Cascade

M. D. Karaseva[a, b, *], M. M. Trubyanov[a, **], A. A. Atlaskin[a], I. V. Vorotyntsev[a], N. I. Laguntsov[b], and P. N. Drozdov[a]

[a] *Nizhny Novgorod State Technical University n.a. R.E. Alekseev, Nizhny Novgorod, 603950 Russia*
[b] *Public Joint-Stock Company "Aquaservice," Moscow, 115230 Russia*
**e-mail: rita09karaseva@mail.ru*
***e-mail: m.trubyanov@gmail.com*

Received October 25, 2018; revised November 29, 2018; accepted December 4, 2018

Abstract—A method is proposed for the removal of water vapor from commercial grade nitrous oxide during its high purification using membrane gas-separation technologies. A single membrane module, a two-stage recirculation unit with the recycling of permeate stream, and two-stage cascades with membranes of different selectivity and experimentally determined the permeability of Lestosil, PVTMS, and CTA test membranes to nitrous oxide have been considered. The optimum values of the main operating parameters of the drying system have been determined, and the energy efficiency of membrane gas separation and low-temperature filtration processes have been evaluated with taking into account the operating costs and purified gas losses.

Keywords: nitrous oxide, water vapor, drying, membrane gas separation, cryofiltration, energy efficiency

DOI: 10.1134/S2517751619020045

INTRODUCTION

High-purity gases are necessary starting materials for the microelectronic industry, and they are used for solving medical, chemical, and other problems. Special requirements are imposed on the impurity composition of these gases, in particular, in terms of water vapor content [1, 2].

Nitrous oxide (dinitrogen oxide) is a precursor in the semiconductor industry; high-purity nitrous oxide is used for the production of silicon nitride layers and the nitridation of thin silicon films, and it is used as a milder oxidizing agent in silicon dioxide film technology. Dinitrogen oxide is used as an oxidizing agent for a flame atomizer in atomic emission spectrophotometric analysis. The presence of water vapor in the above processes adversely affects the quality of the resulting products [3–6] due to an oxygen impurity formed in semiconductors.

Various methods can be used to remove water vapor from nitrous oxide: distillation methods [7–9], adsorption, and membrane technologies [10]. Adsorption drying of gases is widely used in industry; according to published data, a dew point of −100°C can be reached in the process of adsorption [11]. The energy-intensive process of sorbent regeneration is a disadvantage of the adsorption method. Cryofiltration is also used to remove water vapor from gas mixtures and to concentrate some gases (helium and heavy hydrocarbons). A disadvantage of the cryofiltration of nitrous oxide is a low process temperature (−82°C), limitations on the rate of filtration and pressure, and complex process instrumentation [12, 13], which leads to high operating costs.

It is promising to remove easily penetrating impurities from gases with the use of membrane gas-separation technologies [14–16]. New highly selective materials to be used as membranes and new energy-efficient separation processes for solving various problems are under continuous development [17–19].

A single membrane module can concentrate oxygen or generate nitrogen by separating air because the permeability of the majority of membrane materials to oxygen is higher than that to nitrogen. Analogously, a membrane module can purify nitrous oxide by removing impurities that have a lower permeability value than that of nitrous oxide [10]. Multistep systems are applicable to the separation of nitrogen and ammonia or carbon dioxide and ammonia [20], that is, gases at elevated pressures, which do not require additional energy-consuming compression points between the stages of a cascade. Membrane cascades are used to extract helium from natural gas and to remove water vapor and carbon dioxide in the preparation of liquefied natural gas. It is energetically advantageous to remove or extract easily penetrating impurities with low initial concentrations (to 5 vol %) using recirculation membrane cascades, in which gas losses are minimal [21, 22]. Membrane gas separation processes are also used for solving the problems of deep gas purification with the implementation of separation in cascades like a continuous membrane column in processes with

Table 1. Membrane permeabilities

Membrane material	Lestosil	PVTMS	CTA
Selective layer thickness, 10^{-6} m	5	10	5
Permeability to water vapor, L h^{-1} m^{-2} atm^{-1}	8870 [28]	33000 [29]	150600 [29]
Permeability to nitrous oxide, L h^{-1} m^{-2} atm^{-1}	4550 [10]	4850	623
Selectivity, H_2O/N_2O	1.95	6.80	241.81

a supply tank and in purification processes under non-steady-state conditions [10, 21–26].

Membrane units are easy to operate, and they have small dimensions, as compared to those of cryogenic plants. There is no phase transition in the processes of membrane gas separation. Currently available published data on the application of membrane gas separation to the removal of water traces from specialty gases used in the semiconductor industry are very few in number.

The aim of this work was to calculate an optimal technological procedure for membrane gas separation in order to remove residual water vapor from commercial-grade nitrous oxide in accordance with SEMI standard requirements, to select a membrane material and module parameters, and to analyze the energy consumption of the developed membrane procedure in comparison with that of cryofiltration drying.

EXPERIMENTAL

Commercial unpurified nitrous oxide can contain to 0.1 vol % water vapor [3]. The water vapor content of high-purity nitrous oxide should be no higher than 1 ppm [3].

In this work, we used membrane gas separation for the extraction of water vapor from nitrous oxide with several membrane polymers: Lestosil, cellulose triacetate (CTA), and polyvinyltrimethylsilane (PVTMS). Possible changes in the CTA membrane were neglected because the water vapor content of the feed stream was low. The flow rate to be dried was 60 L/h. The maximum allowable high pressure was 10 atm. It was reasonable to minimize the nitrous oxide content of the permeate flow in the system and to minimize energy consumption. Table 1 summarizes the parameters of the test membranes. The samples of continuous CTA and PVTMS films for measuring the permeability of nitrous oxide were obtained under laboratory conditions by pouring a solution (0.75 wt % CTA in glacial acetic acid or 2.0 wt % PVTMS in toluene) onto an inert substrate with the subsequent solvent evaporation in equilibrium conditions. Published data on the permeability of a commercially produced composite membrane of the Lestosil type (NPO Polimersintez, Vladimir) to water vapor and nitrous oxide were also used in the calculations. This membrane was a thin film of ladder-type poly(dimethylsiloxane-di(phenylsiloxane)) copolymer 5 μm thick supported on a fluoroplastic substrate, which, in turn, was applied onto a nylon mesh.

The permeability of nitrous oxide in the samples of PVTMS and CTA membranes was measured in the Laboratory of Membrane and Catalytic Processes at the Nizhny Novgorod State Technical University. It was also found that the permeabilities of nitrous oxide and carbon dioxide in CTA membranes are equal within the limits of measurement errors, as was also confirmed previously by Hughes and Jiang [27]. To calculate the membrane process of the removal of water impurities, we used the permeabilities of water vapor reported by Vorotyntsev et al. [28], who considered the high purification process in a range of low water vapor concentrations, and by Mark et al. [29], who did not provide information on the level of water concentrations. Teplyakov et al. [30] also reported experimental data on the permeability of PVTMS membrane to water vapor.

The permeability of individual components (nitrous oxide) through the membranes was measured by the Daynes–Barrer method [31, 32] at pressure drops of 0.05, 0.1, and 0.15 MPa across the membrane at a temperature of 25°C.

Figure 1 shows a schematic diagram of the experimental setup. The device was equipped with a measuring cell consisting of two flanges made of stainless steel grade 12X18H10T with a fluoroplastic seal. A vacuum (4×10^{-5} Pa) in the low-pressure cavity was provided by a HiCube 80 Eco vacuum station. The membrane surface area was 2.5×10^{-4} m^2. Pressure changes in both cavities were monitored by a WIKA S-10 0–1.6 MPa pressure sensor (Wika, Germany) with an accuracy of 0.5% over a full scale and a MKS Baratron 750B 0–2666.45 Pa pressure sensor (MKS Instruments, the United States) with an accuracy of 1% on a measured value basis. Pressure in the high-pressure cavity was set and maintained with a pressure-reducing valve.

To calculate the membrane module, a crossflow mathematical model was chosen (Fig. 2) [33, 34]; this model is applicable to the assessment of a separation process in hollow-fiber membrane modules, and it is described by the following equations:

$$\frac{d\left(qC_q^i\right)}{ds} = -\pi^i\left(P_hC_q^i - P_lC_l^i\right), \quad (1)$$

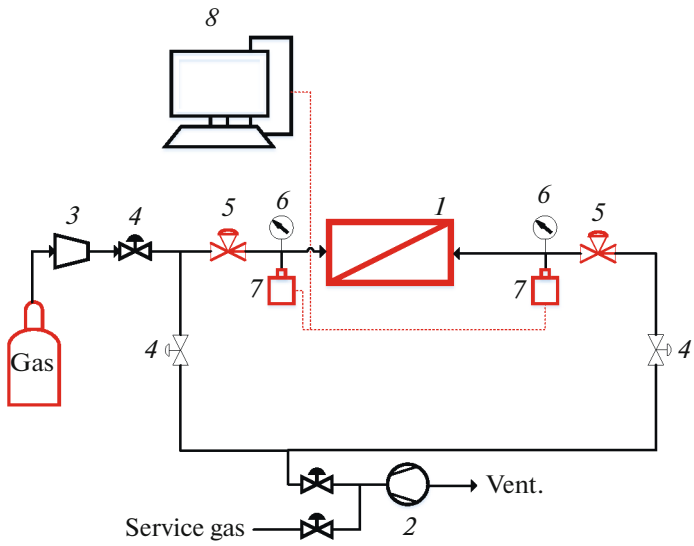

Fig. 1. Schematic diagram of the setup for measuring the permeability of individual gases: (*1*) measuring cell; (*2*) vacuum station; (*3*) pressure-reducing valve; (*4*) membrane valve; (*5*) pneumatic valve; (*6*) manometer; (*7*) pressure sensor; and (*8*) personal computer.

$$C_l^i = \frac{\pi^i\left(P_h C_q^i - P_l C_l^i\right)}{\Sigma_j \pi^j\left(P_h C_q^j - P_l C_l^j\right)}, \quad (2)$$

where q is the flow entering an infinitely small volume in the high-pressure area, C_q^i is the concentration of the ith component in the flow q, s is a surface element, π^i is the permeability of the ith component, P_h is the high pressure value in the high-pressure area, P_l is the low pressure value in the low-pressure area, and C_l^i is the concentration of the ith component that has penetrated through the membrane. It is convenient to consider the partial flow of the ith component $qC_q^i = Z^i$ (the Cauchy problem) and to write Eq. (1) in the form

$$\frac{dZ^i}{dS} = -\pi^i\left(P_h C_q^i - P_l C_l^i\right). \quad (3)$$

The boundary conditions for Eqs. (2) and (3) take the form

$$Z^i(s = 0) = FC_F^i, \quad (4)$$

$$Z^i(s = S) = RC_R^i, \quad (5)$$

where F is the membrane module feed flow, C_F^i is the concentration of the ith component in the feed flow F, R is the retentate flow, and C_R^i is the concentration of the ith component in the retentate flow R. The flow that has penetrated the membrane is called permeate P, and the concentration of the ith component in it is C_P^i.

The selected model assumes that there is no pressure drop along the membrane, and the permeability of a component is constant at the specified values of pressure, temperature, and water vapor concentration in the initial gas mixture. In the framework of the problem to be solved, these assumptions are permissible because the concentration of vapor is much lower than the concentration of the main component, nitrous oxide.

In the calculation of a recirculation membrane gas separation system (a cascade), which consists of two membrane modules connected in series, where the permeate flow of the second module returns to the inlet of the first module, a relationship between the flow split ratios of the second and the first modules should be taken into account.

$$\theta_2 = \frac{1 - \dfrac{\theta_1}{\theta}}{1 - \theta_1} = \frac{1 - \dfrac{\theta_1 F}{P}}{1 - \theta_1}, \quad (6)$$

where $\theta_1 = P_1/F_1$ and $\theta_2 = P_2/F_2$.

Systems consisting of two or three membrane modules (two-stage systems) can be equipped with a compressor. The energy consumed by the compressor is

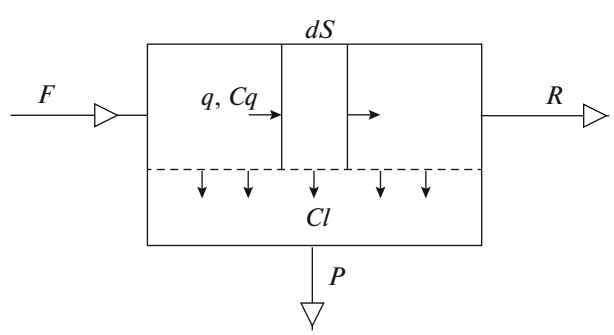

Fig. 2. Single membrane module and a perpendicular outflow mathematical model.

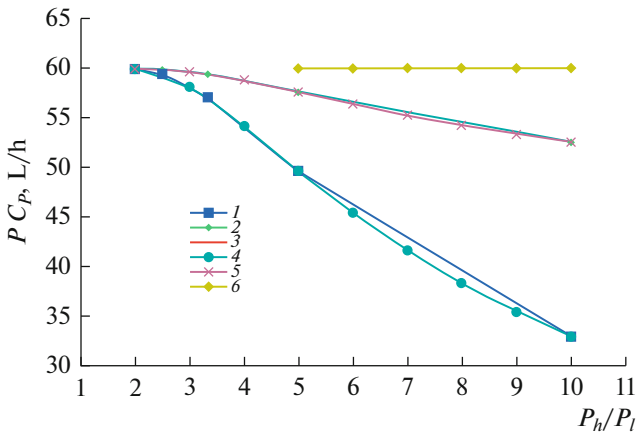

Fig. 3. Dependence of the amount of nitrous oxide in the permeate flow on the pressure drop for a single membrane module: (*1*) CTA (P_l varied), (*2*) PVTMS (P_l varied), (*3*) Lestosil (P_l varied), (*4*) CTA (P_h varied), (*5*) PVTMS (P_h varied), and (*6*) Lestosil (P_h varied).

calculated in an adiabatic approximation according to the formula

$$W_1 = \frac{G}{\eta_{ad}}\frac{\kappa}{\kappa-1}RT\left[\left(\frac{p_h}{p_l}\right)^{\frac{\kappa-1}{p_l}\mu}-1\right], \quad (7)$$

where G is the flow compressed by the compressor [mol/s]; R is the universal gas constant [J mol^{-1} K^{-1}]; $T = 297$ K is the gas temperature [K]; $\kappa = 1.31$ is the adiabatic index for nitrous oxide; $\eta_{ad} = 0.85$ is the efficiency of the compressor operating in the adiabatic compression mode; p_h is the flow pressure at the compressor outlet, which is 10 atm; p_l is the flow pressure at the compressor inlet, which is 1 atm; and $\mu = 0.9937$ is the compressibility factor of nitrous oxide at a temperature of 297 K.

Table 2. Parameters of a single membrane module

Membrane	Lestosil	PVTMS	CTA
Pressure drop P_h/P_l	10	10	10
F, L/h	60	60	60
P, L/h	59.997	52.580	33.024
R, L/h	0.003	7.420	26.976
Cp (H_2O), vol %	0.10	0.11	0.18
Cp (N_2O), vol %	99.90	99.89	99.81
S, m^2	0.0014	0.0012	0.0059
θ	0.9990	0.8760	0.5500
Productivity in monetary equivalent, ruble per hour	0.02	51.94	188.83
Nitrous oxide losses in monetary equivalent, ruble per hour	134.99	118.31	74.30

Based on the fact that the price of 1 L of high-purity nitrous oxide is 7 rubles, the performance of the membrane system can be estimated in the monetary equivalent of Q (ruble/h) (the cost of dried nitrous oxide produced in the membrane system for 1 h). Analogously, the cost of electricity W_c consumed by the compressor can be calculated (3.10 rubles per kWh). It is important to take into account the loss of nitrous oxide in monetary terms: the cost of undried nitrous oxide (2.25 rubles per liter), which entered into the permeate flow W_p of the system (ruble/h). To compare the systems described in this work, we introduced the following comparison criterion:

$$E = Q - W_c - W_p. \quad (8)$$

The systems were compared under the condition that the feed flow F and the concentration of water vapor in the retentate flow were constant.

RESULTS AND DISCUSSION

To solve this problem, we considered a single membrane module (Fig. 2). Gas (commercial nitrous oxide) from a cylinder was supplied to the inlet of a single membrane module under high pressure; therefore, there was no compressor in the system. The use of a vacuum pump in the permeate flow of this system will lead to additional energy consumption.

For the calculations presented below, we used the permeability of nitrous oxide experimentally measured in this work (Table 1) and published data on water vapor permeability. Note that, in this work, the dependence of the permeability of membranes on the concentration of water vapor was neglected in the framework of the problem of trace moisture removal from nitrous oxide.

In the calculations of a single membrane module, the high pressure P_h in the high-pressure cavity was varied at a constant low pressure of 1 atm and the pressure in the low-pressure cavity was varied from 0.1 to 0.5 atm at a constant high pressure of 1 atm. Figure 3 illustrates the dependence of the amount of nitrous oxide in the permeate flow on the pressure drop.

In Fig. 3, it can be seen that pressure variation had no visible effect on the separation process performed with the Lestosil membrane, as compared with other membranes. Figure 3 also indicates that the problem cannot be solved with the use of the Lestosil membrane at a ratio between high and low pressures lower than 5: a water vapor concentration lower than 1 ppm was not achieved in the retentate flow. This is due to the low selectivity of this membrane for a pair of water vapor/nitrous oxide components, as compared to PVTMS and CTA membranes. The higher the pressure drop and the membrane selectivity, the lower the nitrous oxide content of the permeate flow, that is, the more advantageous the membrane gas separation system.

Table 2 summarizes the calculated parameters of a single membrane module with different membranes.

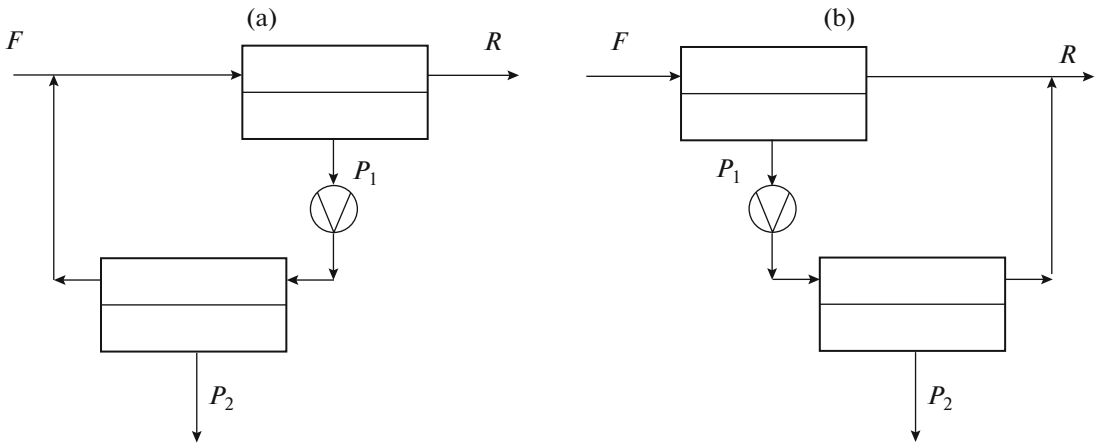

Fig. 4. Two-stage (a) recirculation and (b) simple cascades.

Table 2 indicates that the use of the Lestosil membrane and its further study is unreasonable within the framework of the problem to be solved. The application of a single membrane module makes it possible to dry nitrous oxide to water vapor concentration lower than 1 ppm in the retentate flow; however, the permeate flow contained more than 99.8% nitrous oxide.

It is advisable to consider two-stage cascades (Fig. 4). For the separation process at the second stage, it is necessary to create an overpressure; an interstage compressor is used for this purpose. The retentate flow at the second stage can be returned to the inlet of the system (Fig. 4a) or to the outlet of the system (Fig. 4b). In this work, we conducted a numerical study without mixing the concentrations of components in the nodes—an ideal cascade model.

Table 3 summarizes the results of the numerical study of a recirculation cascade and a simple cascade for PVTMS and CTA membranes at a pressure drop of 10 atm.

In Table 3, it can be seen that the simple cascade is less promising than the recirculation one for solving

Table 3. Parameters of two-stage cascades

Membrane	PVTMS		CTA		PVTMS		CTA	
	recirculation cascade				simple cascade			
	first stage	second stage	first stage	second stage	first stage	second stage	first stage	second stage
Pressure drop P_h/P_l	10	10	10	10	10	10	10	10
F, L/h	60		60		60		60	
P, L/h	332.5	13.1	67.9	4.5	52.6	40.0	33.0	14.9
R, L/h	46.9	319.4	55.5	63.4	7.4	12.5	26.9	18.1
Cp (H_2O), vol %	0.11	0.46	0.18	1.32	0.11	0.15	0.18	0.40
Cp (N_2O), vol %	99.89	99.54	99.82	98.68	99.98	99.85	99.82	99.60
S, m^2	0.0012	0.0001	0.0058	0.0003	0.0012	0.0009	0.0059	0.0027
θ	0.876	0.039	0.550	0.067	0.876	0.762	0.550	0.452
Productivity, L/h	46.929		55.467		19.955		45.067	
Productivity in monetary equivalent, ruble per hour	328.50		388.27		139.68		315.47	
Energy consumption in monetary equivalent, ruble per hour	0.11		0.02		0.02		0.01	
Nitrous oxide losses in monetary equivalent, ruble per hour	29.48		10.13		90.00		33.53	

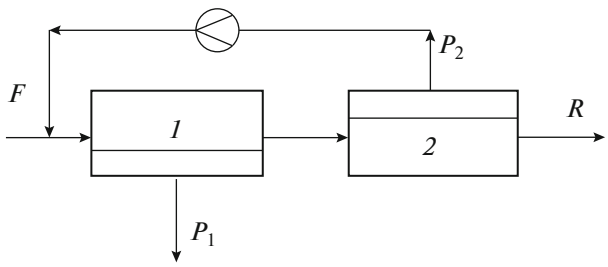

Fig. 5. Sequential recirculation cascade.

the problem: its productivity is lower, and nitrous oxide losses are greater. The use of a less selective membrane in the recirculation cascade increased nitrous oxide losses by a factor of almost 2.5.

We considered a sequential recirculation cascade is (Fig. 5). Because the feed flow enters the system under high pressure and the pressure of the recirculation permeate flow of the second module is lower than the feed flow pressure, a compressor is required to compress the permeate flow of the second module. The evaluation of such a system showed that, at a nitrous oxide recovery higher than 95%, a condensate is formed in the permeate flow because the partial pressure is higher than the saturated vapor pressure at room temperature (18°C).

To avoid water vapor condensation in the permeate flow, it is possible to reduce the initial concentration of water vapor in the feed flow of the system using a refrigerator to cool the gas to 3°C. In this case, the flow rate at the system inlet is 58.985 L/h and the concentration of water vapor in the flow is 0.075 vol %. On condition of the equality of the degrees of nitrous oxide extraction in the retentate flow, the concentration of water vapor in the permeate flow was decreased by only 1 vol % for a PVTMS membrane or by 2 vol % for a CTA membrane, and the dew points were 26.8 and 39.4°C, respectively. A decrease in the initial concentration of water vapor with the use of a refrigerator, which cooled the gas to 3°C at the inlet of the system, did not allow us to avoid the condensation of water vapor in the permeate flow of the first module. It is promising to install a refrigerator at the entrance to the first module; then, the dew point in the permeate flow will be –8.4°C. However, hybrid systems consisting of refrigerators and membrane modules will not be considered in this paper. To avoid condensation in the permeate flow at room temperature (18°C), the water vapor content of this flow should not exceed 2 vol %; this can be achieved at a recovery of 95% at pressures from 7 to 10 atm for PVTMS and from 9 to 10 atm for CTA membranes; Table 4 summarizes the parameters of such cascades.

Table 4 indicates that the use of a sequential recirculation cascade with a low-selectivity PVTMS membrane for solving the problem is complicated by large energy consumption for compressing the recirculation flow. The sequential recirculation cascade has greater performance than that of two-stage cascades.

Figure 6 shows the dependences of the amount of nitrous oxide in the permeate flow and the comparison criterion on the pressure drop for the two-stage cascades and the sequential cascade.

Figure 6 indicates that the sequential recirculation cascade should be used to solve the problem. At a pressure drop lower than 4 atm, the recovery of nitrous

Table 4. Parameters of a sequential recirculation cascade

Membrane	PVTMS		CTA	
	first module	second module	first module	second module
Pressure drop P_h/P_l	10	10	10	10
F, L/h	60		60	
P, L/h	3.1	676.5	3.1	79.1
R, L/h	733.5	56.9	136.1	56.9
Cp (H_2O), vol %	1.96	0.50	1.96	0.32
Cp (N_2O), vol %	98.04	99.50	98.034	99.68
S, m^2	0.0001	0.0154	0.0005	0.0141
θ	0.9958	0.0776	0.9780	0.4185
Productivity in monetary equivalent, ruble per hour	398.60		398.60	
Energy consumption in monetary equivalent, ruble per hour	0.40		0.05	
Nitrous oxide losses in monetary equivalent, ruble per hour	6.98		6.98	

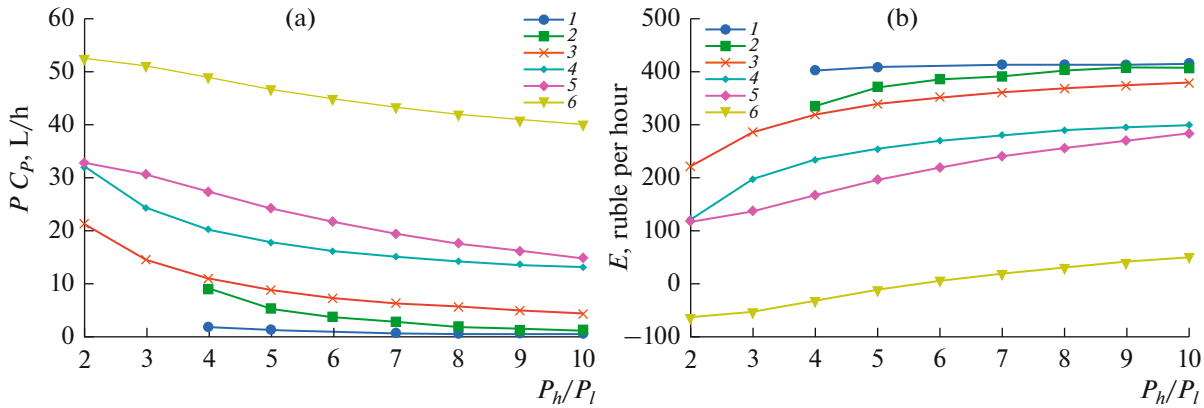

Fig. 6. (a) Dependence of the amount of nitrous oxide in the permeate flow and (b) the comparison criterion on the pressure drop for the cascades: (*1*) sequential recirculation cascade (CTA), (*2*) sequential recirculation cascade (PVTMS), (*3*) two-stage recirculation cascade (CTA), (*4*) two-stage recirculation cascade (PVTMS), (*5*) simple two-stage cascade (CTA), and (*6*) simple two-stage cascade (PVTMS).

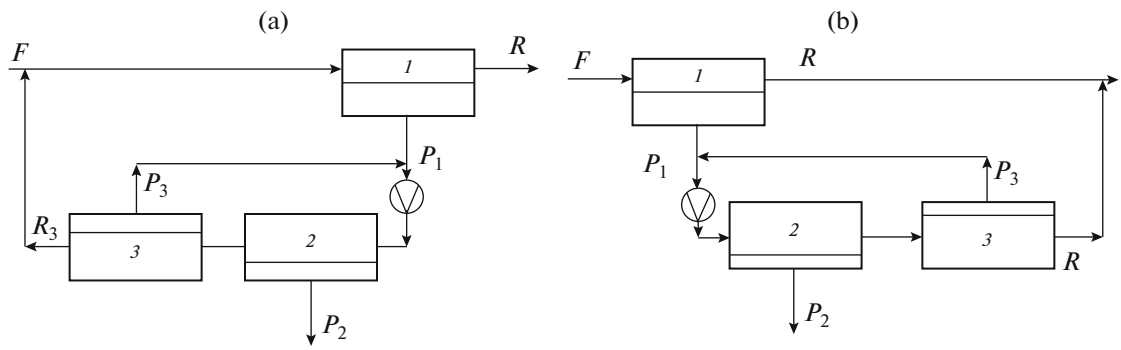

Fig. 7. Two-stage double-loop (a) countercurrent and (b) simple cascades.

oxide in the sequential recirculation cascade is lower than 90%. The use of a two-stage simple cascade is unprofitable.

We considered two-stage double-flow countercurrent and simple cascades [35–37] with PVTMS and CTA membranes (Fig. 7). Table 5 summarizes the results.

It is important that the recovery of nitrous oxide in a two-stage double-circuit cascade can exceed 99%; however, this high recovery leads to a high water vapor content of the permeate flow (10–15 vol %). At such concentrations, a condensate, which has a detrimental effect on the performance of a membrane module, will be formed in the permeate flow. Condensation can be avoided by lowering the recovery to 95%. Table 5, which summarizes the results of a numerical study of these systems, indicates that the use of a low-selectivity membrane leads to high recirculation flows and, as a consequence, to high energy consumption for their compression. At a 95% recovery of nitrous oxide, the two-stage double-circuit cascades are economically comparable to a sequential recirculation cascade.

Based on the above, we can conclude that the use of a sequential recirculation cascade is an optimum way to solve the problem because it consists of two membrane modules and hence is less expensive and easier to operate.

For a comparative assessment of the energy intensity of the proposed membrane separation process and cryofiltration drying, we can proceed from the fact that, on average, 0.025 kg of liquid nitrogen is consumed to produce 1 L of nitrous oxide by the low-temperature filtration method; liquid nitrogen is necessary for maintaining a required temperature in the cryofilter and to condense the filtrate into an intermediate storage tank [9]. If the cost of liquid nitrogen is about 13 rubles per kilogram, 0.33 rubles will be required for the production of 1 L of nitrous oxide. The purification process also involves the heating of an intermediate storage tank to unload the product into a receiving cylinder; the additional energy consumption for heater operation is 0.02 rubles per liter in terms of cash equivalent. In a simple two-stage double-circuit cascade with a CTA membrane, the electrical energy consumption for compression in the production of 1 L of nitrous oxide is less than 0.01 ruble per liter; however, the loss of nitrous oxide in monetary equivalent will be 0.12 or 0.36 rubles per liter on a lost initial commercial

Table 5. Parameters of two-stage double-circuit cascades

Membrane	PVTMS			PVTMS			CTA			CTA		
	recirculation cascade			simple cascade			recirculation cascade			simple cascade		
	first module	second module	third module	first stage	second stage	third stage	first stage	second stage	third stage	first stage	second stage	third stage
Recovery, %	95			95			95			95		
Pressure drop P_h/P_l	10	10	10	10	10	10	10	10	10	10	10	10
F, L/h	714.7	660.8	657.7	60.0	626.4	623.2	131.0	74.4	71.3	60.0	74.0	71.0
P, L/h	657.8	3.1	3.0	52.6	3.2	573.8	74.1	3.1	0.3	33.0	3.0	41.0
R, L/h	56.9	657.7	654.7	7.4	623.2	49.4	56.9	71.3	71.0	27.0	71.0	30.0
Cp (H_2O), vol %	0.46	1.97	1.94	0.11	1.87	0.47	0.23	1.96	1.60	0.18	1.98	0.30
Cp (N_2O), vol %	99.54	98.03	98.06	99.89	98.13	99.53	99.76	98.04	98.40	99.82	98.02	99.70
S, m^2	0.0150	0.0001	0.0001	0.0012	0.0001	0.0131	0.0132	0.0005	0.0001	0.0059	0.0005	0.0073
θ	0.9204	0.0047	0.0045	0.8765	0.9949	0.0792	0.5654	0.0411	0.0045	0.5504	0.0409	0.5775
Productivity in monetary equivalent, ruble per hour	398.35			397.48			398.51			398.76		
Energy consumption in monetary equivalent, ruble per hour	0.22			0.21			0.04			0.04		
Nitrous oxide losses in monetary equivalent, ruble per hour	6.98			7.20			6.98			6.75		

raw material or high-purity nitrous oxide basis, respectively.

Thus, the simplified comparative assessment given above shows that the implementation of the membrane removal of water vapor from nitrous oxide is comparable to the cryofiltration method in terms of energy consumption, and it may be more profitable depending on the membrane material used. In this case, membrane systems are more compact, and they are characterized by simpler equipment; this fact can be especially important for the point-of-use production of a dried gas flow.

CONCLUSIONS

This paper demonstrates the applicability and promise of membrane technologies for the removal of water vapor from nitrous oxide during its high purification.

We considered a single membrane module, two-stage cascades, and a sequential recirculation cascade with membranes of different selectivity for the removal water vapor from nitrous oxide. We found that a simple two-stage double-circuit cascade, which operates at a 95% recovery of nitrous oxide, is the most efficient (with minimal energy consumption) for solving the problem of reducing the water vapor concentration from 0.1 vol % to 1 ppm. Recovery is an important characteristic of sequential and two-stage double-circuit cascades because a condensate can be formed in permeate flows at recoveries higher than 95%, and this condensate adversely affects the operation of the membrane system.

In the evaluation of energy consumption, we considered the energy consumed by the compressor and nitrous oxide losses in the permeate flow in monetary equivalents. We compared cryofiltration and membrane gas-separation methods and found that the removal of water traces from nitrous oxide by the membrane method is comparable to the cryofiltration method in terms of energy consumption.

ACKNOWLEDGMENTS

This work was supported by the Russian Foundation for Basic Research. grant no. 17-38-50086 mol_nr, and the Ministry of Education and Science of the Russian Federation, project no. 11/17-01.10.

REFERENCES

1. H. H. Funke, et al., Rev. Sci. Instrum. **74**, 3909 (2003).
2. *Trace Analysis of Specialty and Electronic Gases*, Ed. by W. M. Geiger and M. W. Raynor, (Wiley, Hoboken, NJ, 2013).
3. *SEMI C3.50-95 Standard for Nitrous Oxide (N2O)*, 99.9994% quality (provisional).
4. Z. Q. Yao, et al., Appl. Phys. Lett. **64**, 3584 (1994).
5. K. A. Ellis and R. A. Buhrman, IBM J. Res. Dev. **43**, 287 (1999).
6. D. Landheer, et al., J. Appl. Phys. **78**, 1818 (1995).
7. N. Takashi, JP Patent Appl. No. 0636576 (1995).
8. D. Zhou and J. P. Borzio, US Patent No. 6505482 (2002).
9. V. M. Vorotyntsev, I. V. Vorotyntsev, and K. Yu. Smirnov, Theor. Found. Chem. Eng. **44**, 249 (2010).
10. V. M. Vorotyntsev, P. N. Drozdov, I. V. Vorotyntsev, and K. Yu. Smirnov, Inorg. Mater. **45**, 1263 (2009).
11. A. A. Paranuk and V. A. Khrisonidi, Interaktiv. Nauka, No. **5**, 51 (2016).
12. K. Yu. Smirnov, High purification of nitrous oxide, Candidate's Dissertation in Engineering (Nizhny Novgorod, 2010) [in Russian].
13. I. V. Vorotyntsev, Physicochemical principles of integrated processes of separation and high purification of gases, Doctoral Dissertation in Engineering (Nizhny Novgorod, 2011) [in Russian].
14. N. I. Laguntsov, G. G. Kagramanov, I. M. Kurchatov, and M. D. Karaseva, Pet. Chem. **57**, 132 (2017).
15. R. W. Baker, Ind. Eng. Chem. Res. **41**, 1393 (2002).
16. V. M. Vorotyntsev, Pet. Chem. **55**, 259 (2015).
17. C. Castel and E. Favre, J. Membr. Sci. **548**, 345 (2018).
18. A. A. Ramirez-Santos, C. Castel, and E. Favre, Sep. Purif. Technol. **194**, 425 (2018).
19. V. Abetz, et al., Adv. Eng. Mater. **8**, 328 (2006).
20. I. V. Vorotyntsev, D. N. Shablykin, P. N. Drozdov, et al., Pet. Chem. **57**, 172 (2017).
21. A. A. Atlaskin, M. M. Trubyanov, N. R. Yanbikov, et al., Pet. Chem. **58**, 508 (2018).
22. A. A. Atlaskin, M. M. Trubyanov, N. R. Yanbikov, et al., J. Membr. Sci. **572**, 92 (2019).
23. V. F. de Almeida and K. J. Hart, J. Membr. Sci. **527**, 164 (2017).
24. M. M. Trubyanov, et al., J. Membr. Sci. **530**, 53 (2017).
25. S. V. Battalov, T. S. Sazanova, M. M. Trubyanov, et al., Pet. Chem. **58**, 806 (2018).
26. V. M. Vorotyntsev, P. N. Drozdov, I. V. Vorotyntsev, and E. S. Belyaev, Pet. Chem. **51**, 595 (2011).
27. R. Hughes and B. Jiang, Gas Sep. Purif. **9**, 27 (1995).
28. V. M. Vorotyntsev, P. N. Drozdov, I. V. Vorotyntsev, and A. E. Anikin, Vestn. Nizhegorodsk. Univ. Imeni N.I. Lobachevskogo, No. 5, 102 (2010).
29. J. E. Mark, *Polymer Data Handbook*, 2nd Ed. (Oxford University Press, Oxford, 2009), p. 54.
30. V. V. Teplyakov, M. G. Shalygin, A. A. Kozlova, and A. I. Netrusov, Pet. Chem. **58**, 949 (2018).
31. R. M. Barrer and E. K. Rideal, Trans. Faraday Soc. **35**, 628 (1939).
32. H. A. Daynes, Proc. R. Soc. London, Ser. A **97** (685), 286 (1920).
33. N. I. Laguntsov, E. V. Talantseva, and V. V. Teplyakov, Theor. Found. Chem. Eng. **31**, 463 (1997).
34. A. N. Kudinov, N. I. Laguntsov, and Yu. P. Neshchimenko, Al'ternativ. Energ. Ekol., No. 02/2, 68 (2013).
35. T. Cnop, S.-J. Doong, D. Farr, and G. K. Xomeritakis, US Patent NO. 22012050816 (2012).
36. V. I. Solomakhin, RU Patent No. 145348 (2014).
37. V. I. Solomakhin, N. I. Laguntsov, I. M. Kurchatov, and Yu. S. Davydov, RU Patent No. 150520 (2014).

Translated by V. Makhlyarchuk