Schematic: ODYSSEY_STM32MP135D

SHEET	SHEET NAME
01	Title, Revision History
02	Block Diagram
03	SUPPLY POWER FLOW
04	IIC TREE
05	Power IN
06	PMIC/WATCHDOG
07	STM32MP135 1/2, POWER
08	STM32MP135 2/2, GPIO
09	DDR3 Memory
10	TF Card, eMMC
11	10/100M Ethernet1
12	10/100M Ethernet2
13	LCD, Camera
14	USB, RPI 40PIN
15	LED, Button, Debug

Revision History

DATE	REVISION	DESCRIPTION
2021/11/03	ODYSSEY_STM32MP135D_v1.0_SCH_211103	1. Frist prototype, 20PCS PCBA. 2. The PCB Revision for this board is v1.0.
2021/12/13		1. Delete C46 C47 2. Mirror vertically L7 1.2&3.4 network
2021/12/21	ODYSSEY_STM32MP135D_1221	1. Mirror camera pin1<->pin30 ; 2. Mirror lcd pin1<->pin40 ;
2023/04/06	ODYSSEY_STM32MP135D_20230406	1. Exchange usb data line of type C & type A ; 2. Delete unused pin of camera; change PA10 to OTG_ID pulldown resistor 4.7k dnp; 3. Change I2C of eeprom from I2C4 to I2C1, otherwise cann't be access; 4. Rotate POE pin +90; 5. Tune the pullup resistor of camera and lcd IIC; 6. Add reserved debug buffer selection; 7. SD holder change to 320090000,same as beagleplay, 8. Tune X2 & X3 crystal load capacitance. 9. Add reserved resistor for phy2 led2; 10. Change USB typec&L1 L7 for cost down; 11. Change J16 PONKEY to testpoint; 12. Change RJ45 and Transformer for cost down; 13. Change GND of camera connector to GND_EARTH. 14. Add watchdog IC SGM820B-2.8XTDE8G/TR . 15. The PCB Revision for this board is v0.9.
2023/05/10	ODYSSEY_STM32MP135D_20230510	1.Add R205 resistor for 5v_in,for fast power on; 2.Change SD INT from PH4 to PH10,avoid conflicts; 3.Change LCD_BL from PI1 to PB13,for pwm control; 4.Change PH4 use as WATCHDOG enable control; 5.Change U6 32Kbit eeprom to SOP8 256Kbit eeprom; 6.Add Ferrite Bead and cap for power of phy1& 2; 7.Change net of MPU pin w11 to VDD_3V3; 8.Change eth2 rj45 ack led logic,from high to low; 9.Exhange TX/RX path of phy1&2,for layout; 10.Delete net of GND_EARTH,improve ESD issue; 11.Change eMMC power to vdd_sd,for wake up issue ; 12.Add RC for SD detect ;

STM32MP135DAF Block Diagram

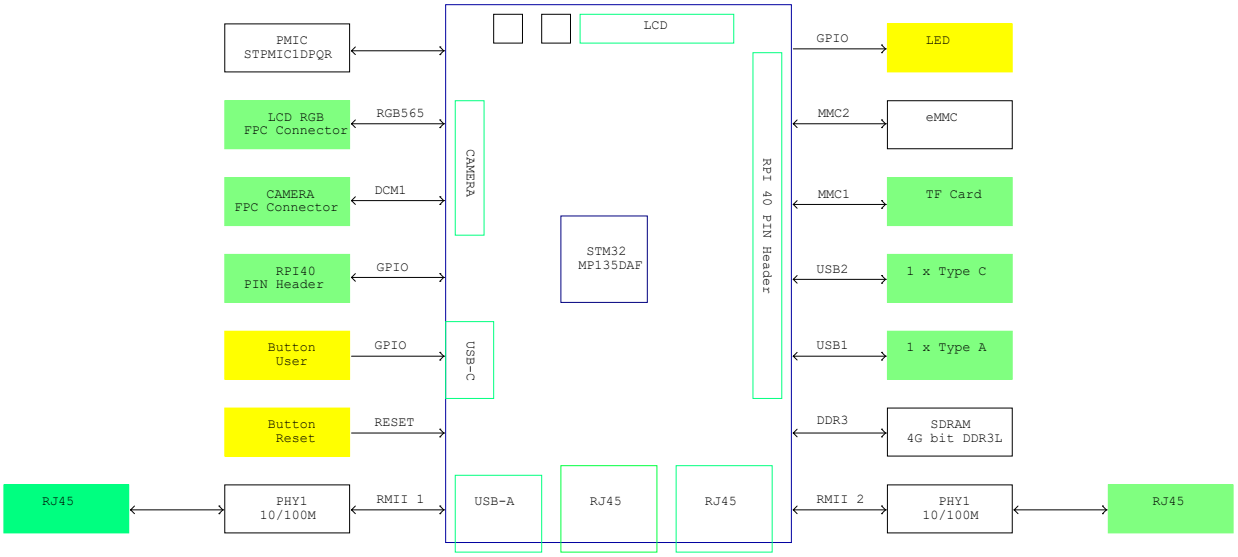

seeed The IoT Hardware Enabler	https://www.seeedstudio.com	
	Title: ODYSSEY_STM32MP135DAF	
Size: A3	Document Number: 02 Block Diagram	Rev: v0.2
Draw By: JN.Fuong	Date: Thursday, May 18, 2023	Sheet: 2 of 15

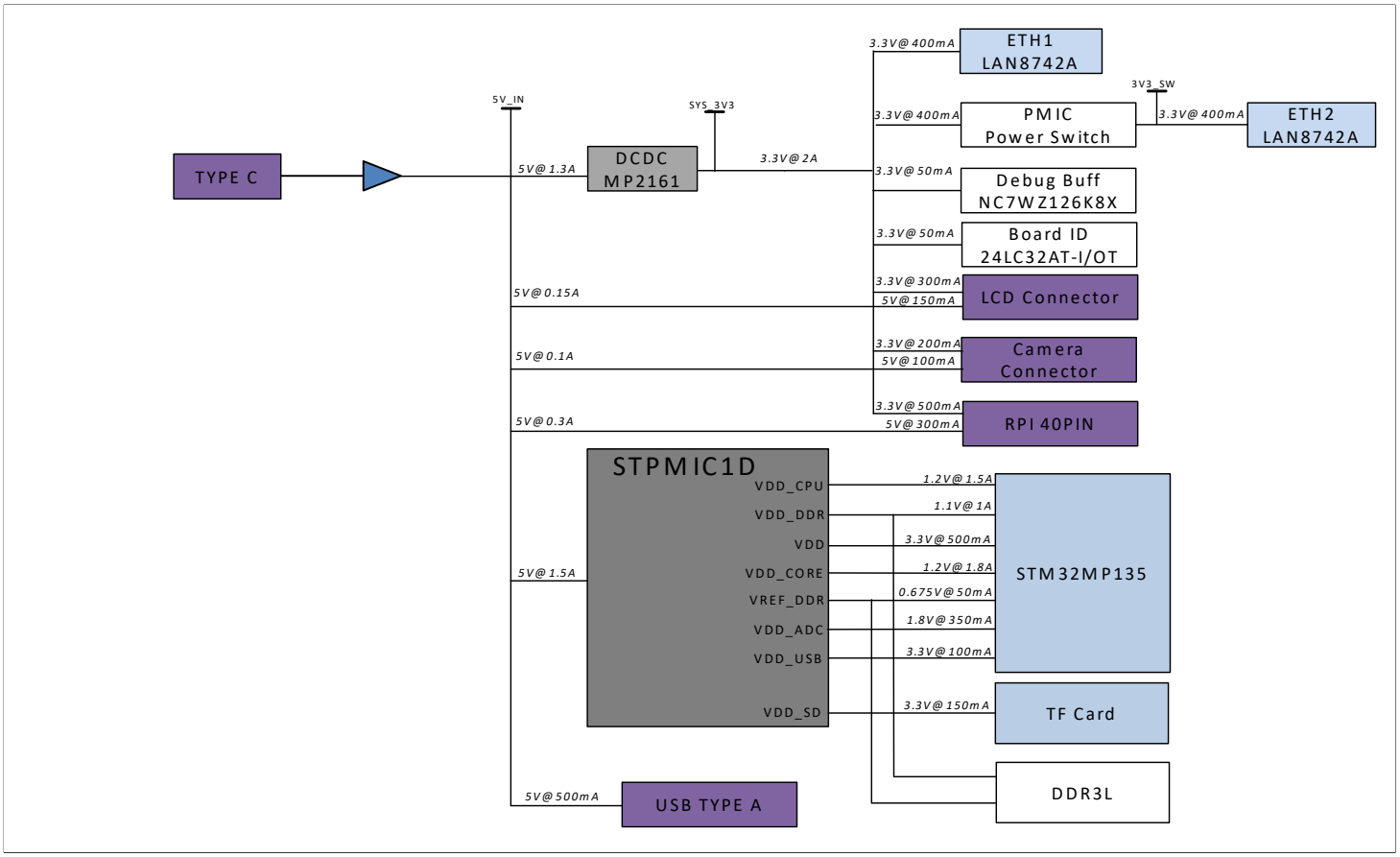

seeed The IoT Hardware Enabler	https://www.seeedstudio.com	
	Title: ODYSSEY_STM32MP135DAF	
Size: A3	Document Number: 03 SUPPLY POWER FLOW	Rev: v0.2
Draw By: JN.Fuong	Date: Thursday, May 18, 2023	Sheet: 3 of 15

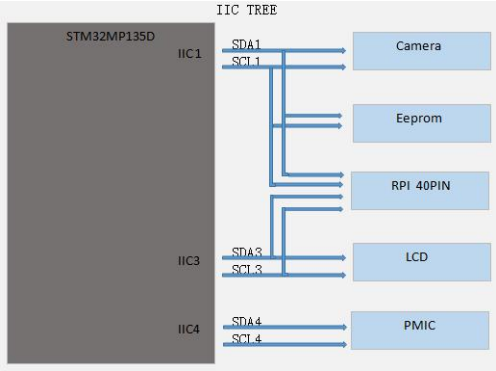

seeed The IoT Hardware Enabler	https://www.seeedstudio.com	
	Title: ODYSSEY_STM32MP135DAF	
Size: A3	Document Number: 04 IIC TREE	Rev: v0.2
Draw By: JN.Fuong	Date: Thursday, May 18, 2023	Sheet: 4 of 15

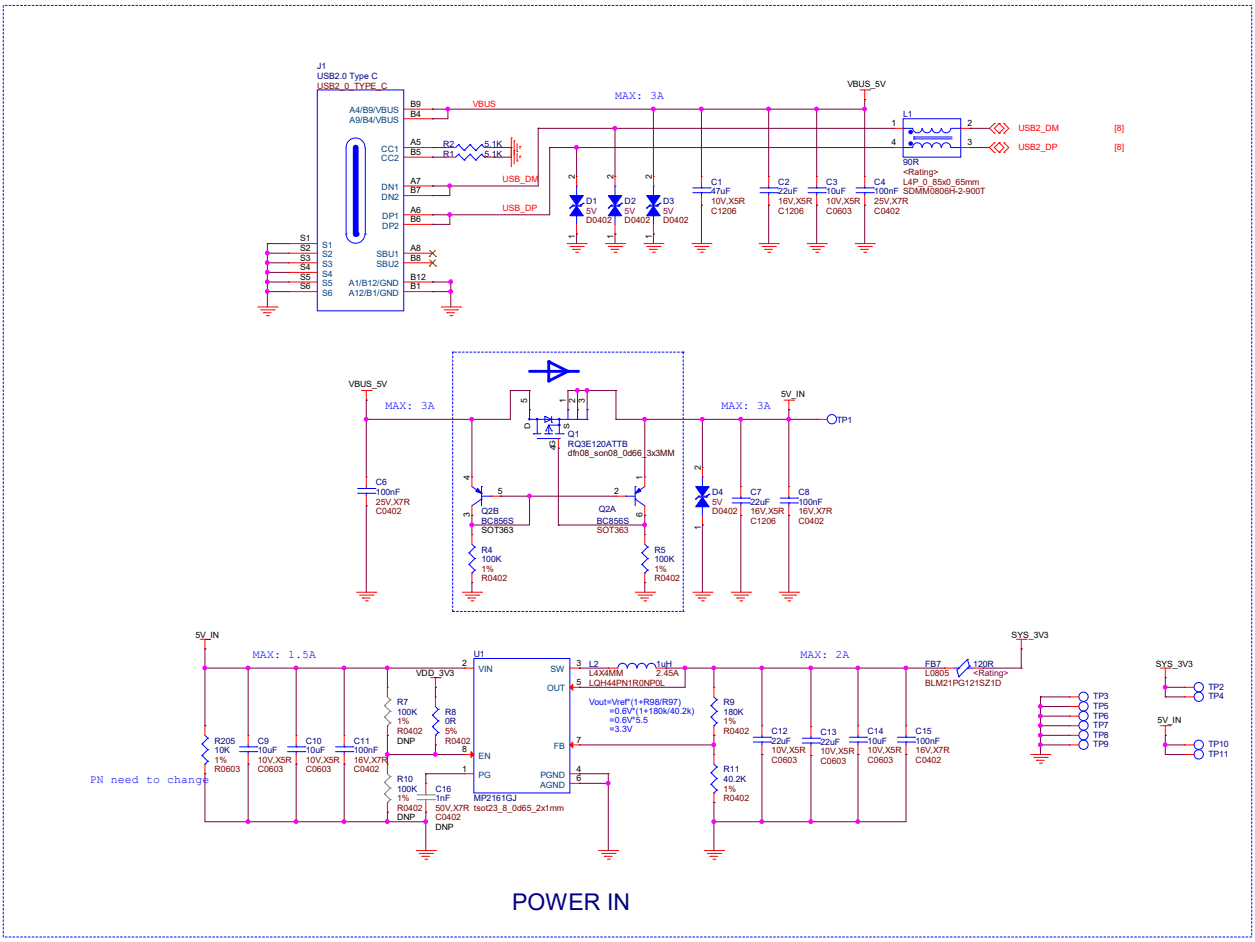

POWER IN

seeed The IoT Hardware Enabler	https://www.seeedstudio.com	
	Title: ODYSSEY_STM32MP135DAF	
Size: A3	Document Number: 05 Power IN	Rev: v0.2
Draw By: JN.Fuong	Date: Thursday, May 18, 2023	Sheet: 5 of 15

Default DNP

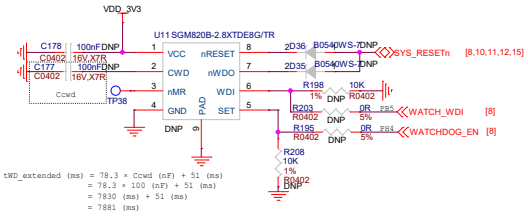

External watchdog

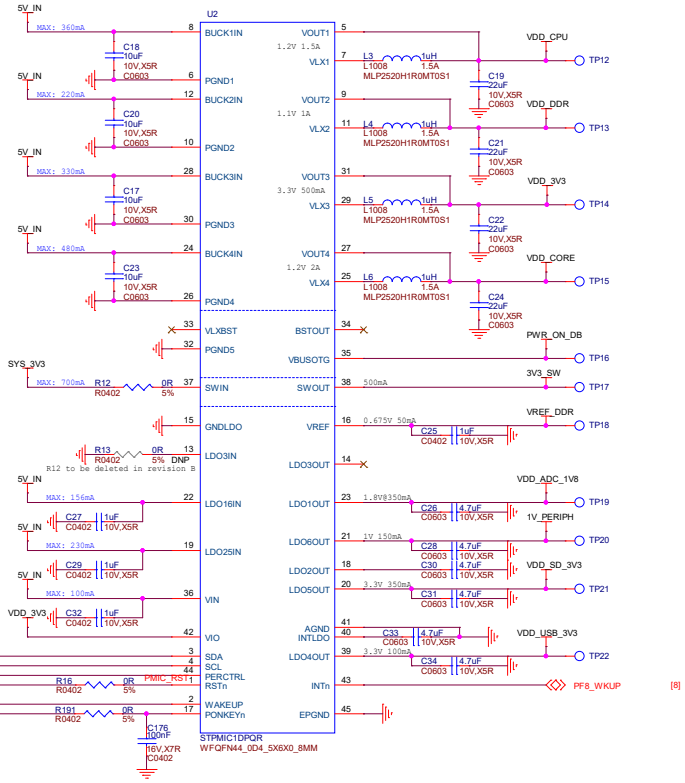

PMIC

seeed The IoT Hardware Enabler	https://www.seeedstudio.com	
	Title: ODYSSEY_STM32MP135DAF	
Size: A3	Document Number: 06 PMIC	Rev: v0.2
Draw By: JN.Fuong	Date: Thursday, May 18, 2023	Sheet: 6 of 15

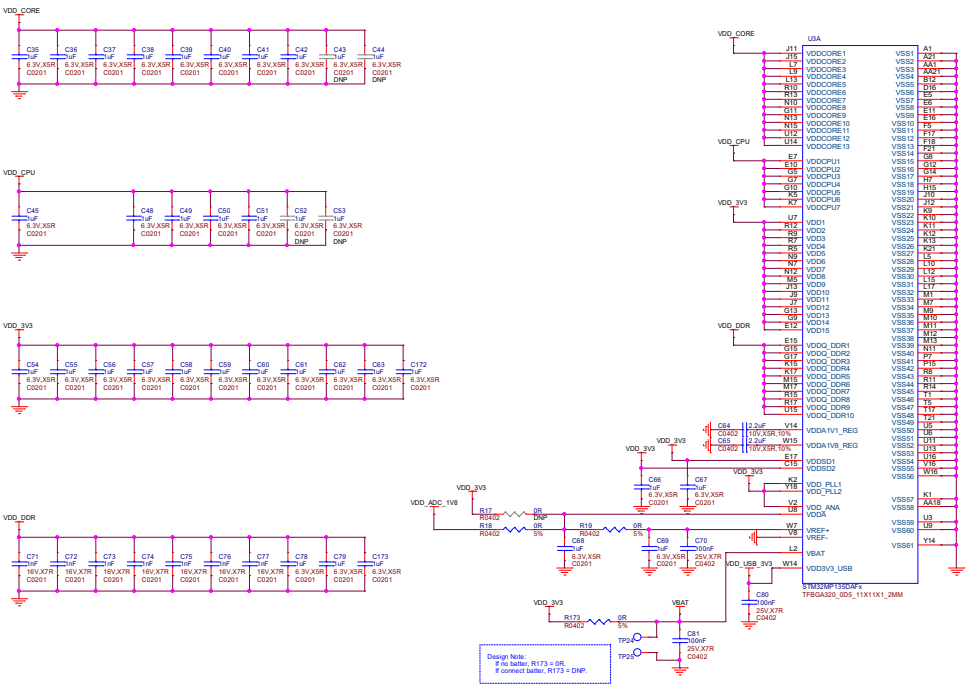

MPU POWER

seeed The IoT Hardware Enabler

https://www.seeedstudio.com

Title: ODYSSEY_STM32MP135DAF

Size: C	Document Number: 07 STM32MP135 1/2, POWER	Rev: v0.2
Draw By: JN.Fuong	Date: Thursday, May 18, 2023	Sheet: 7 of 15

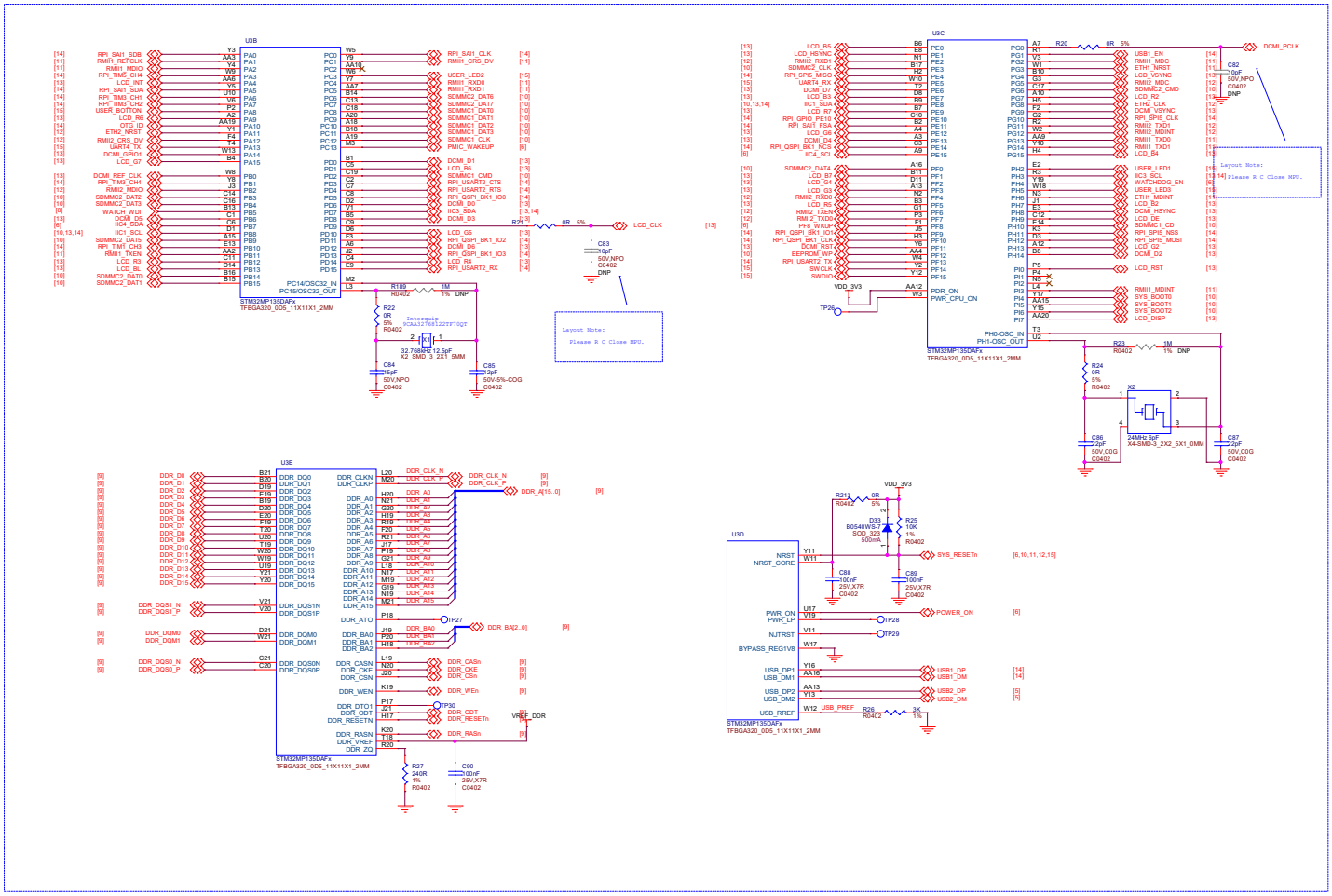

seeed
The IoT Hardware Enabler

https://www.seeedstudio.com

Size: C	Document Number: 08 STM32MP135 2/2, GPIO		Rev: v0.2
Draw By: JN.Fuong	Date: Thursday, May 18, 2023		Sheet: 8 of 15

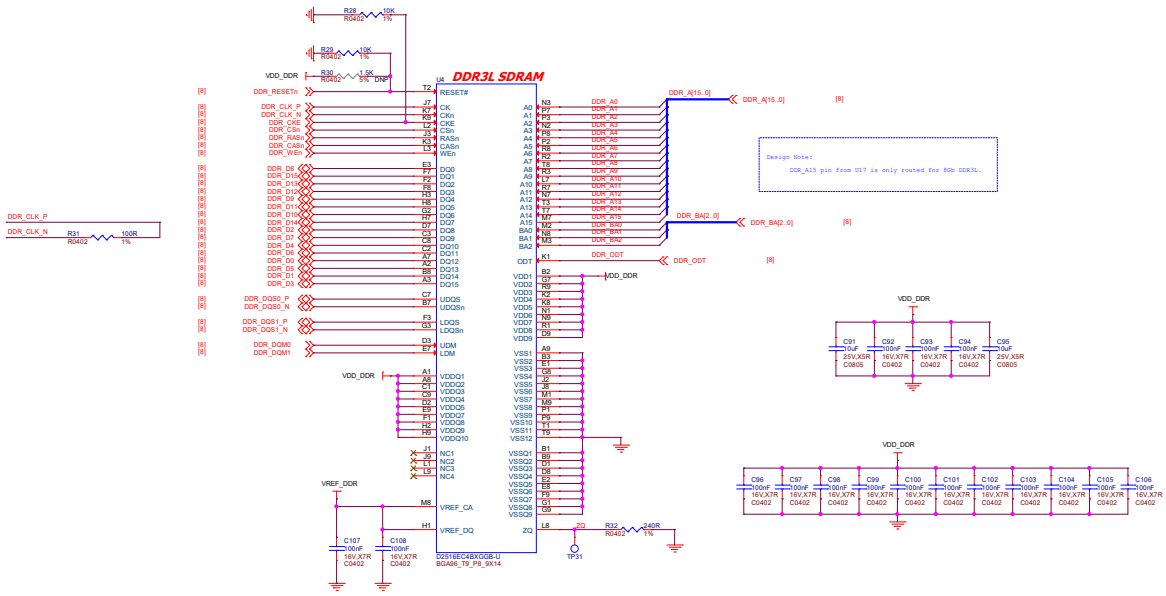

4Gb DDR3L

seeed The IoT Hardware Enabler	https://www.seeedstudio.com		
	Title: ODYSSEY_STM32MP135DAF		
Size: C	Document Number: 09 DDR3 Memory		Rev: v0.2
Draw By: JN.Fuong	Date: Thursday, May 18, 2023		Sheet: 9 of 15

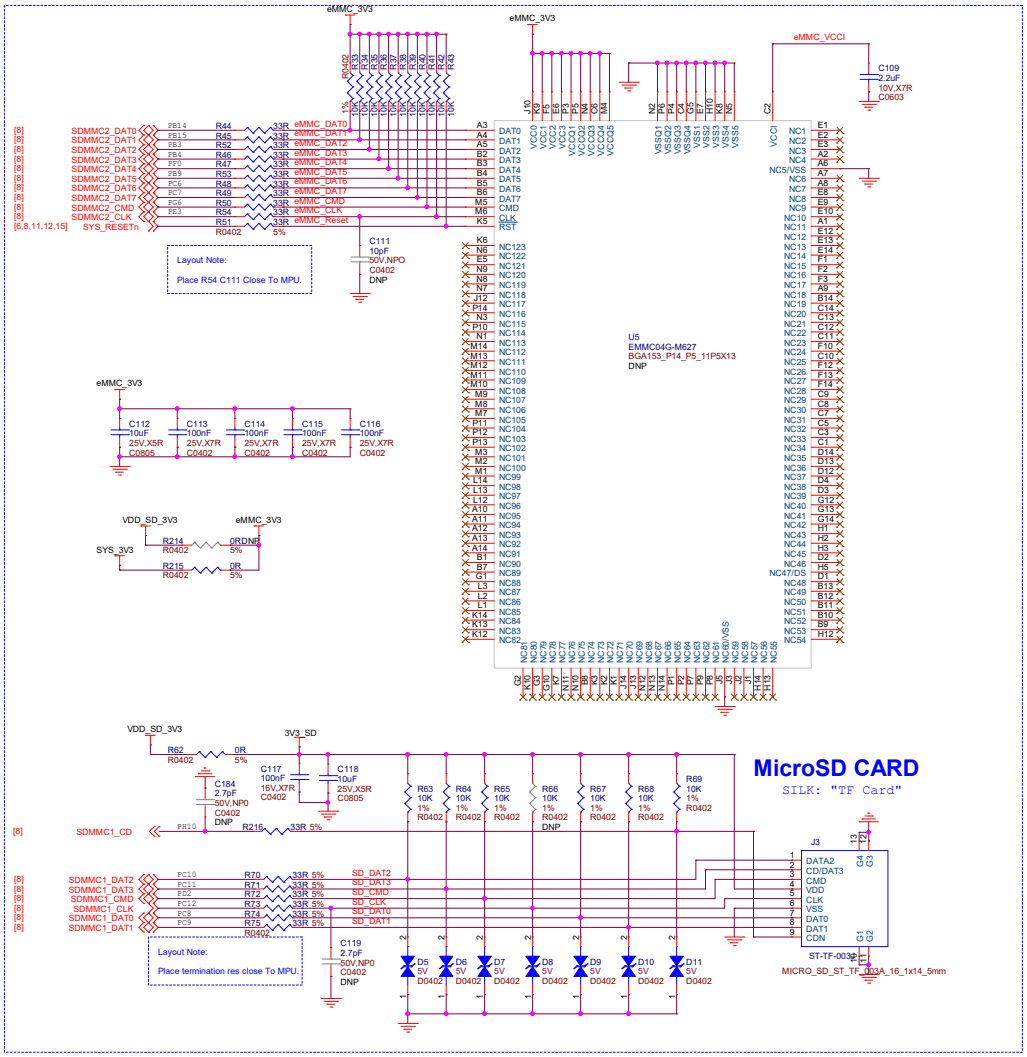

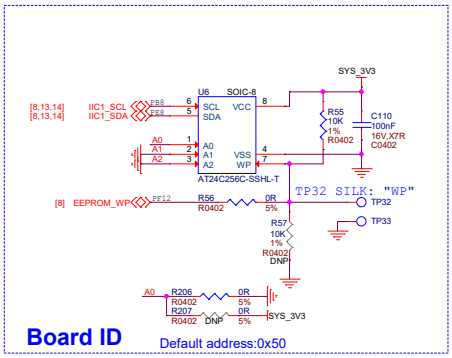

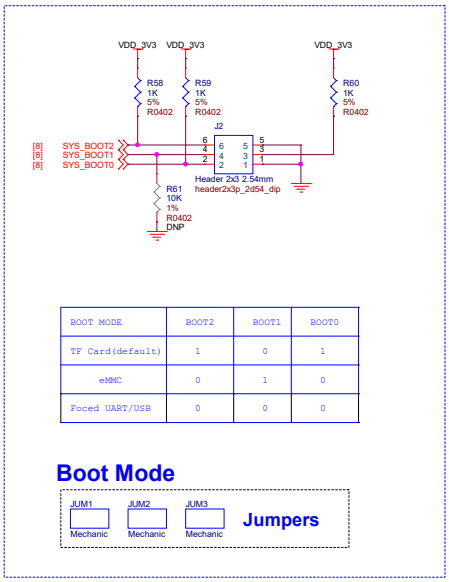

BOOT MODE	BOOT2	BOOT1	BOOT0
TF Card(default)	1	0	1
eMMC	0	1	0
Foced UART/USB	0	0	0

Boot Mode

seeed The IoT Hardware Enabler

https://www.seeedstudio.com

Title: ODYSSEY_STM32MP135DAF

Size: A3	Document Number: 10 TF Card, eMMC	Rev: v0.2
Draw By: JN.Fuong	Date: Sunday, June 25, 2023	Sheet: 10 of 15

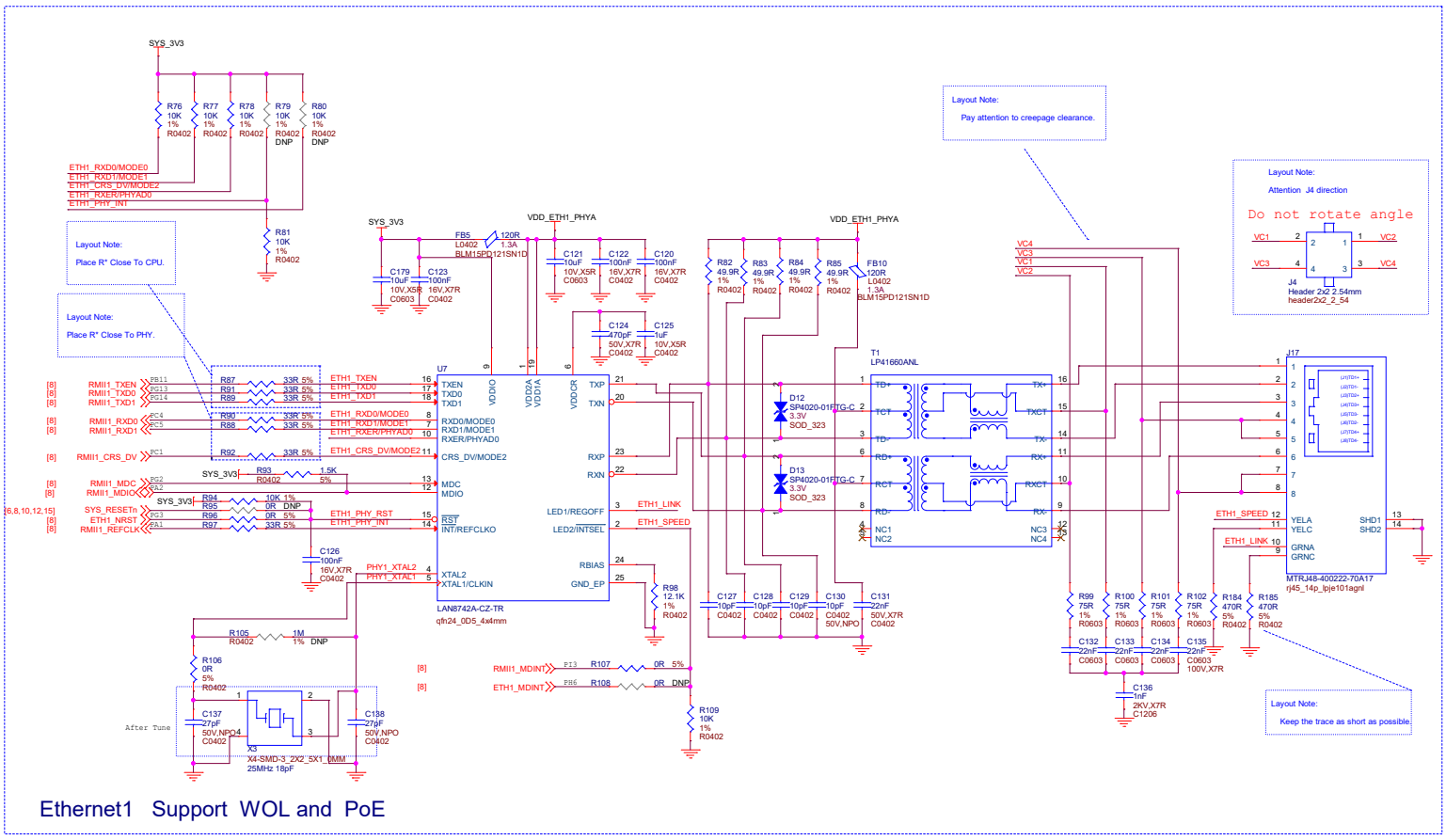

Ethernet1 Support WOL and PoE

seeed The IoT Hardware Enabler	https://www.seeedstudio.com	
	Title: ODYSSEY_STM32MP135DAF	
Size: A3	Document Number: 11 10/100M Ethernet1	Rev: v0.2
Draw By: JN.Fuong	Date: Thursday, May 18, 2023	Sheet: 11 of 15

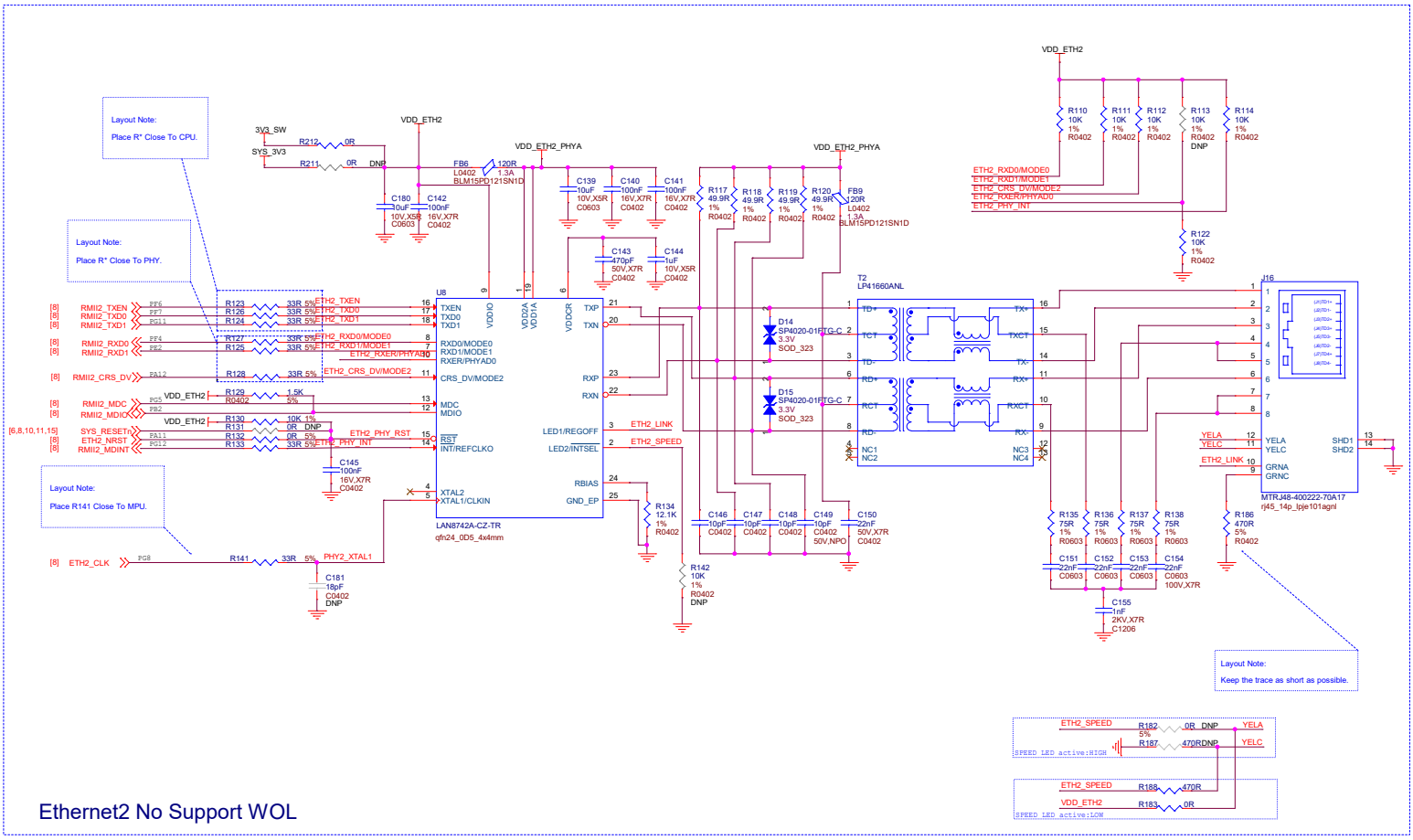

Ethernet2 No Support WOL

seeed The IoT Hardware Enabler

https://www.seeedstudio.com

Title: ODYSSEY_STM32MP135DAF		
Size: A3	Document Number: 12 10/100M Ethernet2	Rev: v0.2
Draw By: JN.Fuong	Date: Thursday, May 18, 2023	Sheet: 12 of 15

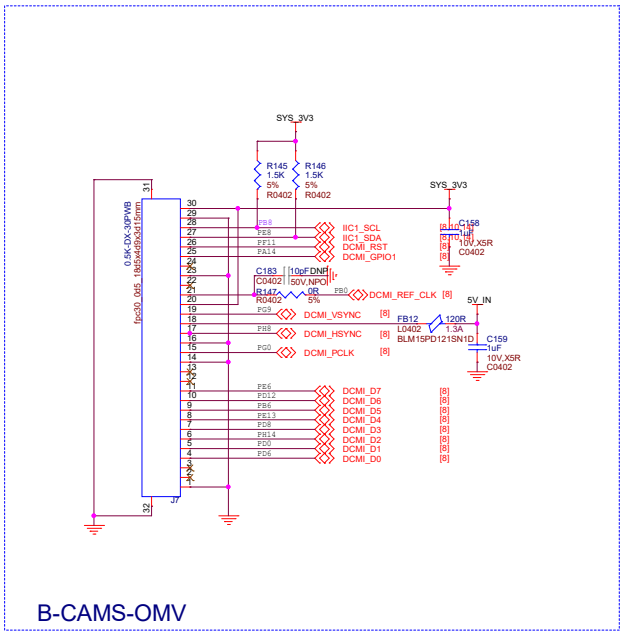

B-CAMS-OMV

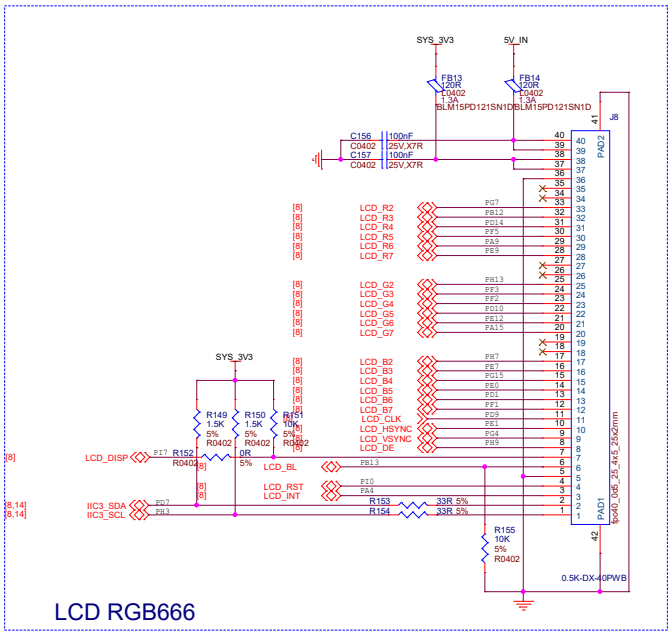

LCD RGB666

seeed The IoT Hardware Enabler	https://www.seeedstudio.com	
	Title: ODYSSEY_STM32MP135DAF	
Size: A3	Document Number: 13 LCD, Camera	Rev: v0.2
Draw By: JN.Fuong	Date: Thursday, May 18, 2023	Sheet: 13 of 15

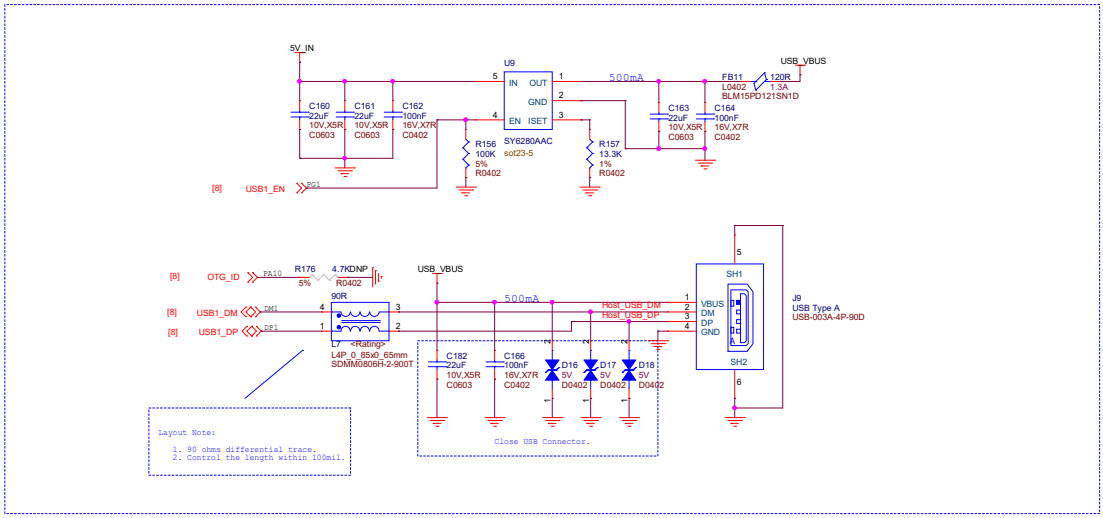

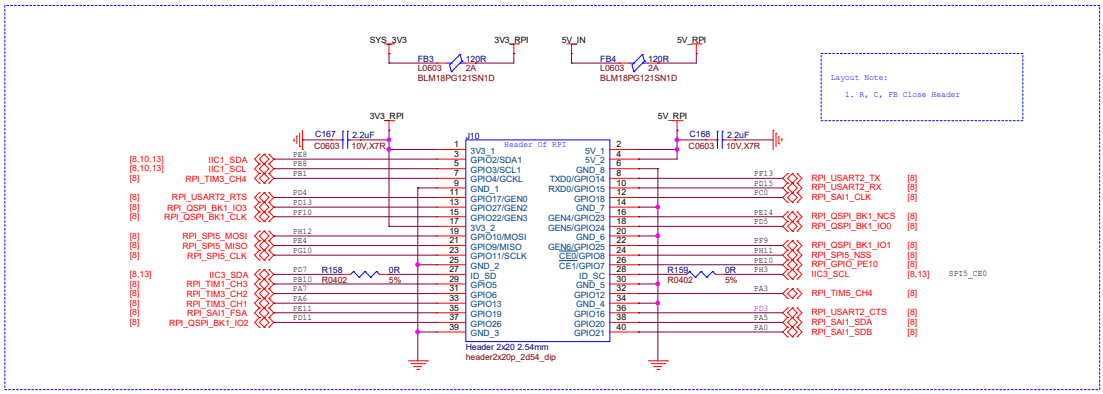

seeed The IoT Hardware Enabler	https://www.seeedstudio.com	
	Title: ODYSSEY_STM32MP135DAF	
Size: A3	Document Number: 14 USB, RPI 40PIN	Rev: v0.2
Draw By: JN.Fuong	Date: Thursday, May 18, 2023	Sheet: 14 of 15

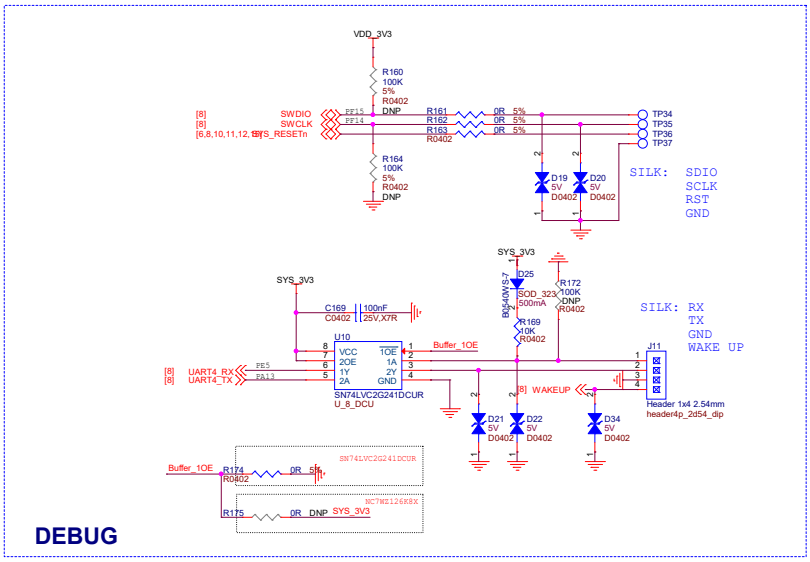

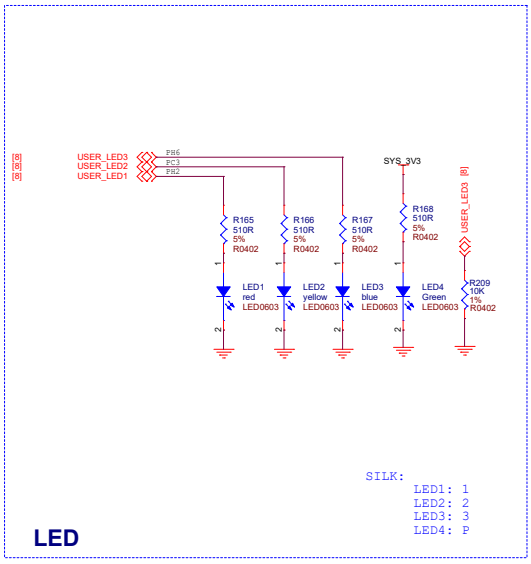

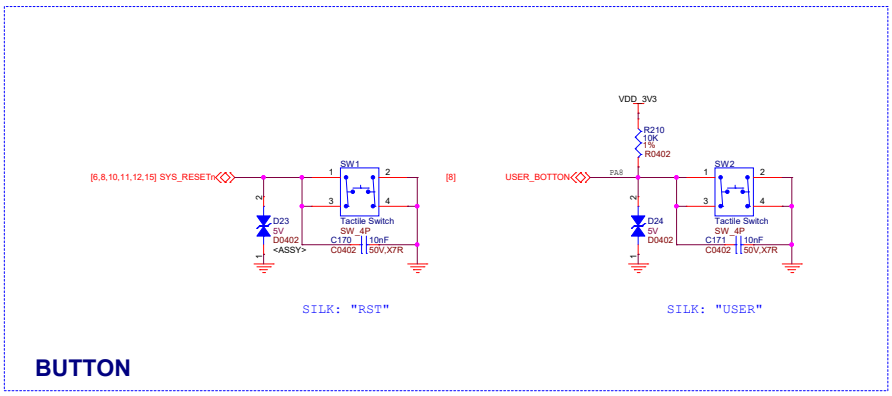

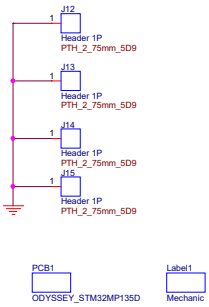

seeed The IoT Hardware Enabler		https://www.seeedstudio.com
	Title:	ODYSSEY_STM32MP135DAF
Size: A3	Document Number: 15 LED, Button, Debug	Rev: v0.2
Draw By: JN.Fuong	Date: Thursday, May 18, 2023	Sheet: 15 of 15