# ARM MPU AM437X Industrial EVM
# ZDN Package

-See the Hardware User Guide for board details
-See the Errata Document for design Issues
-See the PCB Build Specification for PCB Details

M1 Screw4-40_1/4in
M2 Screw4-40_1/4in
M3 Screw4-40_1/4in
M4 Screw4-40_1/4in
M5 Screw4-40_1/4in
M6 Screw4-40_1/4in
M7 Screw4-40_1/4in
M8 Screw4-40_1/4in
M9 Standoff4-40_round_5/8inlong
M10 Standoff4-40_round_5/8inlong
M11 Standoff4-40_round_5/8inlong
M12 Standoff4-40_round_5/8inlong
M13 Rubber Feet
M14 Rubber Feet
M15 Rubber Feet
M16 Rubber Feet
PCB1 AM437x Industrial EVM Bare PCB

ARM MPU

Texas Instruments, Inc.
ARM MPU Business Unit
12500 TI Blvd
Dallas, TX 75243

TEXAS INSTRUMENTS

*Final*

AM437x Industrial EVM
Title Page

| Size | Document Number | Modified By: | Rev |
|---|---|---|---|
| C | am437x_industrial_evm_3k0008.dsn | Damon Domke | 1.3A |

Date: Wednesday, August 27, 2014 Sheet: 1 of 20

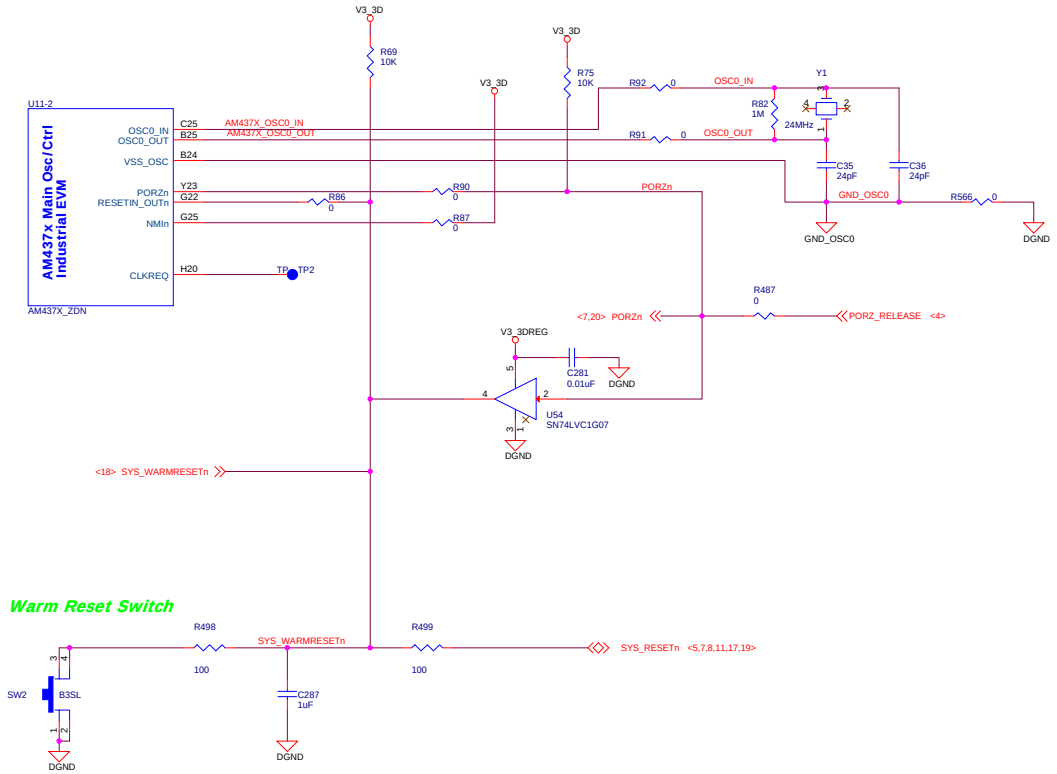


defaultbuild

ARM MPU

**Texas Instruments, Inc.**
ARM MPU Business Unit
12500 TI Blvd
Dallas, TX 75243

*Final*

AM437x Industrial EVM
Processor System

| Size | Document Number | Modified By: | Rev |
|---|---|---|---|
| C | am437x_industrial_evm_3k0008.dsn | Damon Domke | 1.3A |
| Date: Monday, July 21, 2014 | | Sheet: 2 of 20 | |

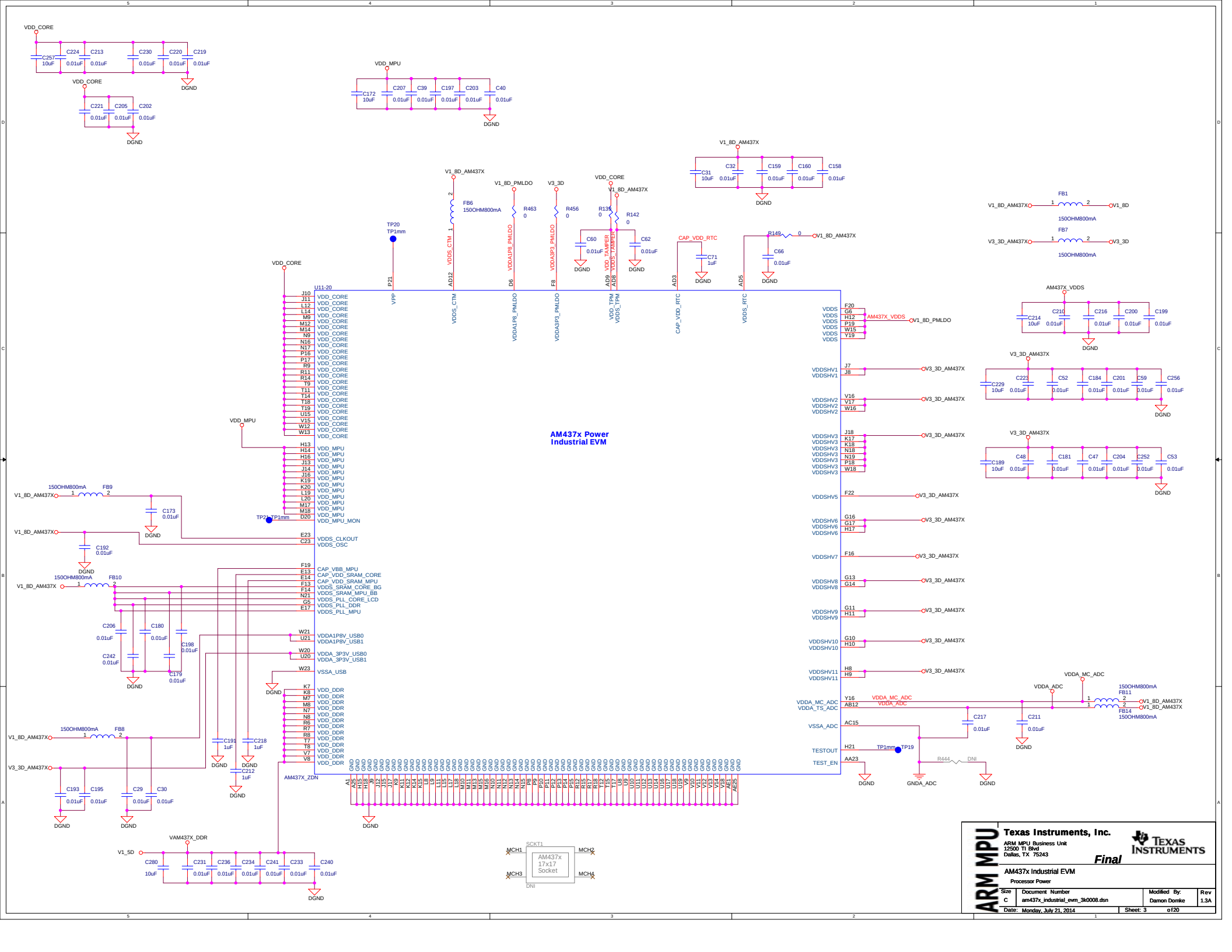
AM437x Power
Industrial EVM
U11-20
VDD_CORE
VDD_MPU
VDD_MPU_MON
VDDS_CLKOUT
VDDS_OSC
CAP_VBB_MPU
CAP_VDD_SRAM_CORE
CAP_VDD_SRAM_MPU
VDDS_SRAM_CORE_BG
VDDS_SRAM_MPU_BB
VDDS_PLL_CORE_LCD
VDDS_PLL_DDR
VDDS_PLL_MPU
VDDA1P8V_USB0
VDDA1P8V_USB1
VDDA_3P3V_USB0
VDDA_3P3V_USB1
VSSA_USB
VDD_DDR
AM437X_ZDN
VPP
VDDS_CTM
VDDA1P8_PMLDO
VDDA3P3_PMLDO
VDD_TPM
VDDS_TPM
CAP_VDD_RTC
VDDS_RTC
VDDS
AM437X_VDDS
VDDSHV1
VDDSHV2
VDDSHV3
VDDSHV5
VDDSHV6
VDDSHV7
VDDSHV8
VDDSHV9
VDDSHV10
VDDSHV11
VDDA_MC_ADC
VDDA_TS_ADC
VSSA_ADC
TESTOUT
TEST_EN
VDDA_ADC
V1_8D_AM437X
V1_8D_PMLDO
V3_3D_AM437X
V3_3D
V1_8D
V1_5D
VAM437X_DDR
SCKT1
AM437x
17x17
Socket
DNI
DGND
GNDA_ADC
TP1mm
TP20
TP21
TP19
FB1
FB6
FB7
FB9
FB10
FB8
FB11
FB14
150OHM800mA
R463
R456
R135
R142
R149
R444
C60
C62
C66
C71
CAP_VDD_RTC
C31
C32
C158
C159
C160
C161
C162
C163
C164
C165
C166
C167
C168
C169
C170
C171
C172
C173
C174
C175
C176
C177
C178
C179
C180
C181
C182
C183
C184
C185
C186
C187
C188
C189
C190
C191
C192
C193
C194
C195
C196
C197

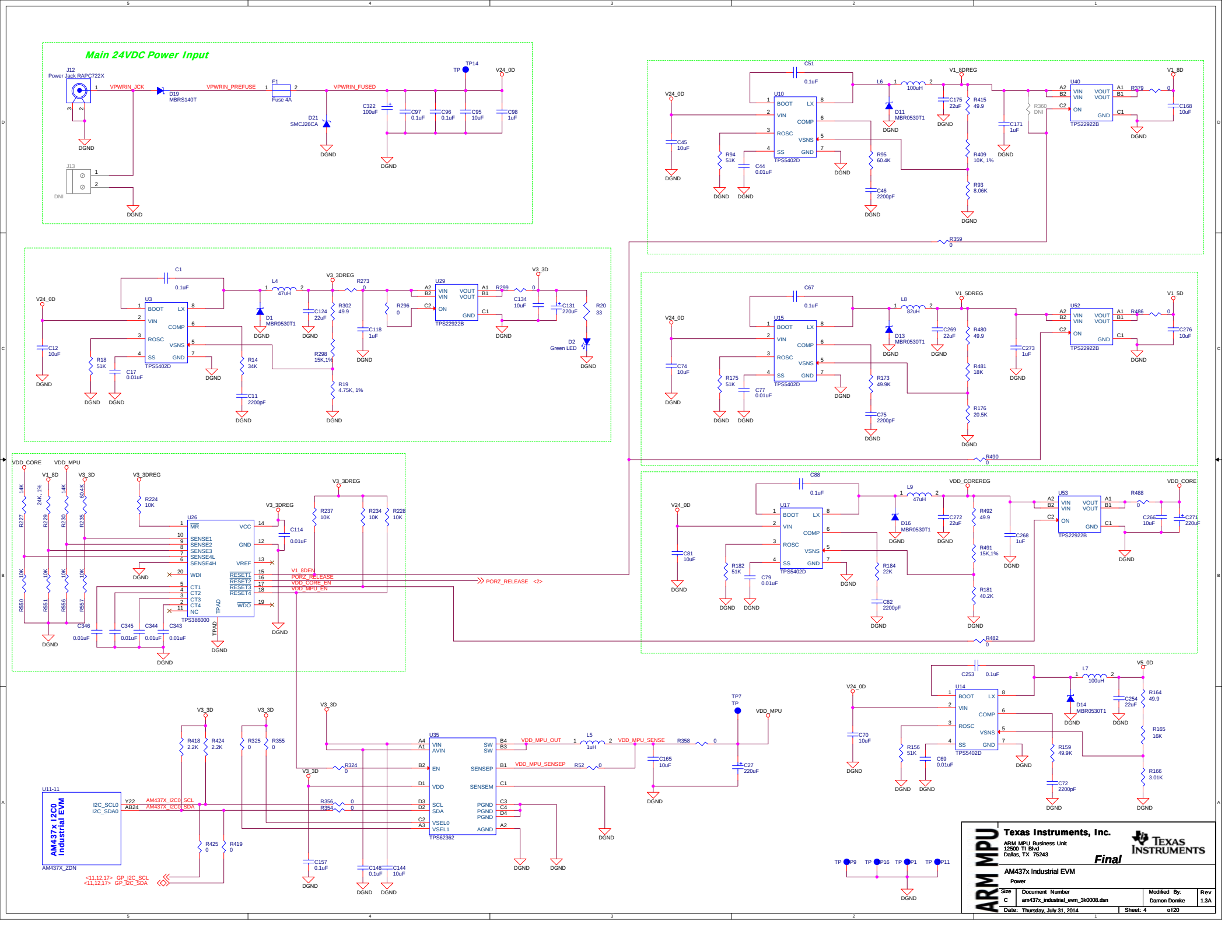
Main 24VDC Power Input
J12
Power Jack RAPC722X
VPWRIN_JCK
D19
MBRS140T
VPWRIN_PREFUSE
F1
Fuse 4A
VPWRIN_FUSED
TP14
V24_0D
D21
SMCJ26CA
C322 100uF
C97 0.1uF
C96 0.1uF
C95 10uF
C98 1uF
J13
DNI
DGND
C51 0.1uF
U10
TPS5402D
L6 100uH
D11 MBR0530T1
C175 22uF
R415 49.9
R409 10K, 1%
R93 8.06K
R95 60.4K
R94 51K
C44 0.01uF
C45 10uF
C46 2200pF
C171 1uF
R360 DNI
U40
TPS22922B
R379
C168 10uF
V1_8DREG
V1_8D
R359 0
C1 0.1uF
U3
TPS5402D
L4 47uH
D1 MBR0530T1
C124 22uF
R302 49.9
R298 15K,1%
R19 4.75K, 1%
R273 0
C118 1uF
R296 0
U29
TPS22922B
R299 0
C134 10uF
C131 220uF
R20 33
D2 Green LED
R18 51K
C17 0.01uF
R14 34K
C11 2200pF
C12 10uF
V3_3D
V3_3DREG
C67 0.1uF
U15
TPS5402D
L8 82uH
D13 MBR0530T1
C269 22uF
R480 49.9
R481 18K
R176 20.5K
R175 51K
C77 0.01uF
R173 49.9K
C75 2200pF
C74 10uF
C273 1uF
U52
TPS22922B
R486
C276 10uF
V1_5DREG
V1_5D
R490 0
C88 0.1uF
U17
TPS5402D
L9 47uH
D16 MBR0530T1
C272 22uF
R492 49.9
R491 15K,1%
R181 40.2K
R182 51K
C79 0.01uF
R184 22K
C82 2200pF
C81 10uF
C268 1uF
U53
TPS22922B
R488
C266 10uF
C271 220uF
VDD_COREREG
VDD_CORE
R482 0
VDD_CORE
VDD_MPU
V1_8D
R227 14K
R229 24K, 1%
R230 14K
R235 60.4K
R550 10K
R551 10K
R556 10K
R557 10K
R224 10K
U26
TPS386000
C346 0.01uF
C345 0.01uF
C344 0.01uF
C343 0.01uF
C114 0.01uF
R237 10K
R234 10K
R228 10K
V1_8DEN
PORZ_RELEASE
VDD_CORE_EN
VDD_MPU_EN
PORZ_RELEASE <2>
TPAD
U35
TPS62362
VDD_MPU_OUT
L5 1uH
VDD_MPU_SENSE
R358 0
VDD_MPU_SENSEP
R52 0
C165 10uF
C27 220uF
TP7
R324 0
R325 0
R355 0
R418 2.2K
R424 2.2K
R356 0
R354 0
U11-11
AM437x I2C0
Industrial EVM
AM437X_ZDN
I2C_SCL0
I2C_SDA0
AM437X_I2C0_SCL
AM437X_I2C0_SDA
<11,12,17> GP_I2C_SCL
<11,12,17> GP_I2C_SDA
R425 0
R419 0
C157 0.1uF
C148 0.1uF
C144 10uF
C253 0.1uF
U14
TPS5402D
L7 100uH
D14 MBR0530T1
C254 22uF
R164 49.9
R165 16K
R166 3.01K
R156 51K
C69 0.01uF
C70 10uF
R159 49.9K
C72 2200pF
V5_0D
TP P9
TP P16
TP P1
TP P11
ARM MPU
Texas Instruments, Inc.
ARM MPU Business Unit
12500 TI Blvd
Dallas, TX 75243
Final
AM437x Industrial EVM
Power
Size C
Document Number am437x_industrial_evm_3k0008.dsn
Modified By: Damon Domke
Rev 1.3A
Date: Thursday, July 31, 2014
Sheet: 4 of 20

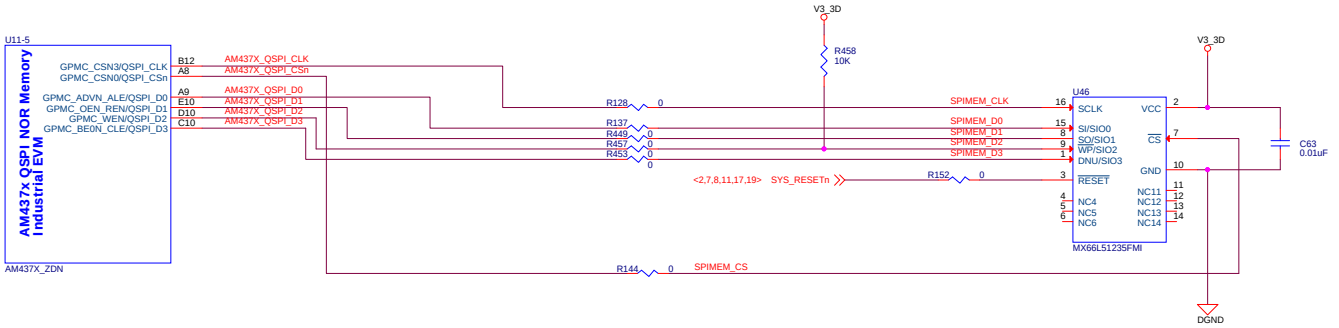


ARM MPU

**Texas Instruments, Inc.**

ARM MPU Business Unit
12500 TI Blvd
Dallas, TX 75243

TEXAS INSTRUMENTS

***Final***

**AM437x Industrial EVM**

QSPI NOR Flash Memory

| Size | Document Number | Modified By: | Rev |
|---|---|---|---|
| C | am437x_industrial_evm_3k0008.dsn | Damon Domke | 1.3A |
| Date: Monday, July 21, 2014 | | Sheet: 5 of 20 | |

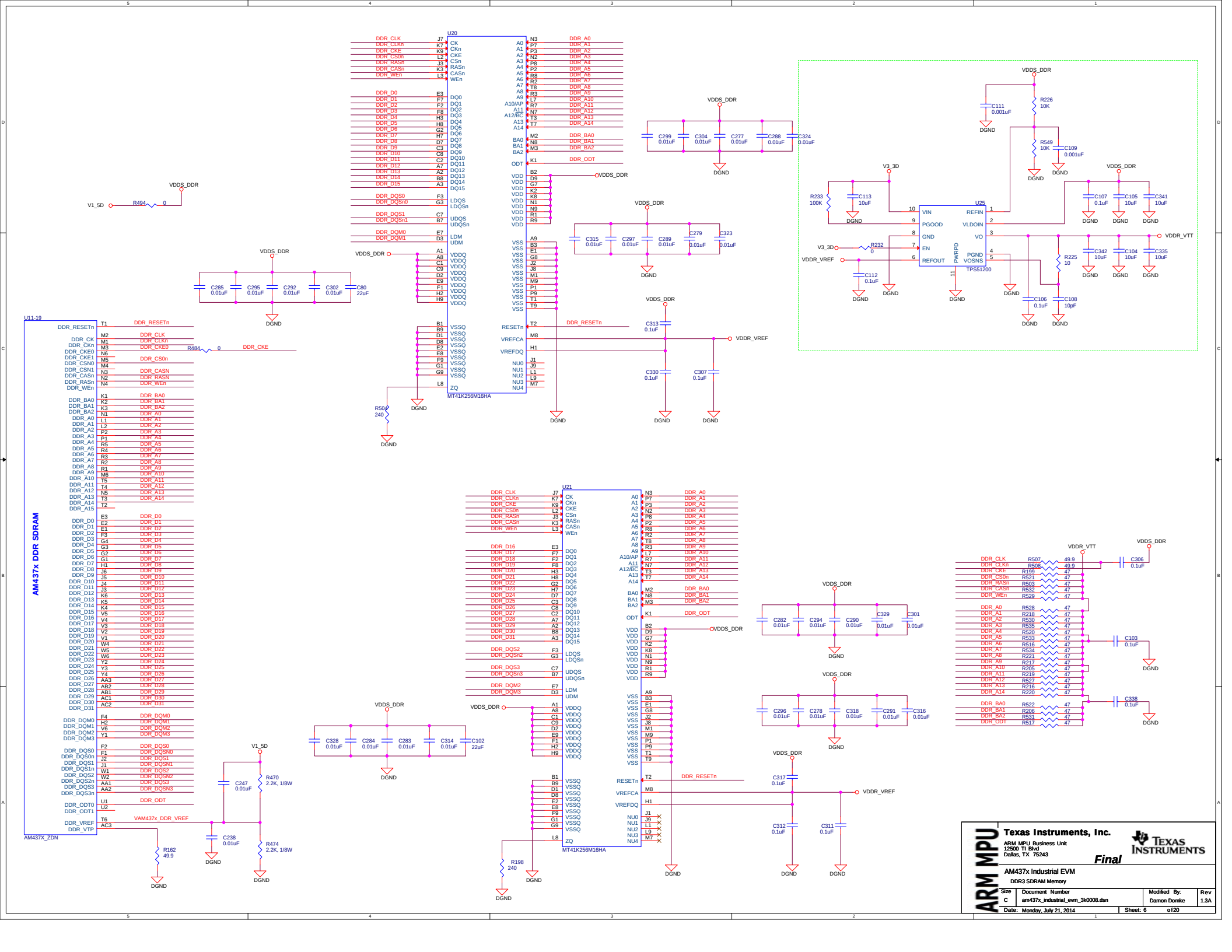


| | | | |
|---|---|---|---|
| Texas Instruments, Inc. | | | |
| ARM MPU Business Unit<br>12500 TI Blvd<br>Dallas, TX 75243 | | | |
| ARM MPU | Final | | |
| AM437x Industrial EVM<br>DDR3 SDRAM Memory | | | |
| Size: C | Document Number: am437x_industrial_evm_3k0008.dsn | Modified By: Damon Domke | Rev: 1.3A |
| Date: Monday, July 21, 2014 | Sheet: 6 of 20 | | |

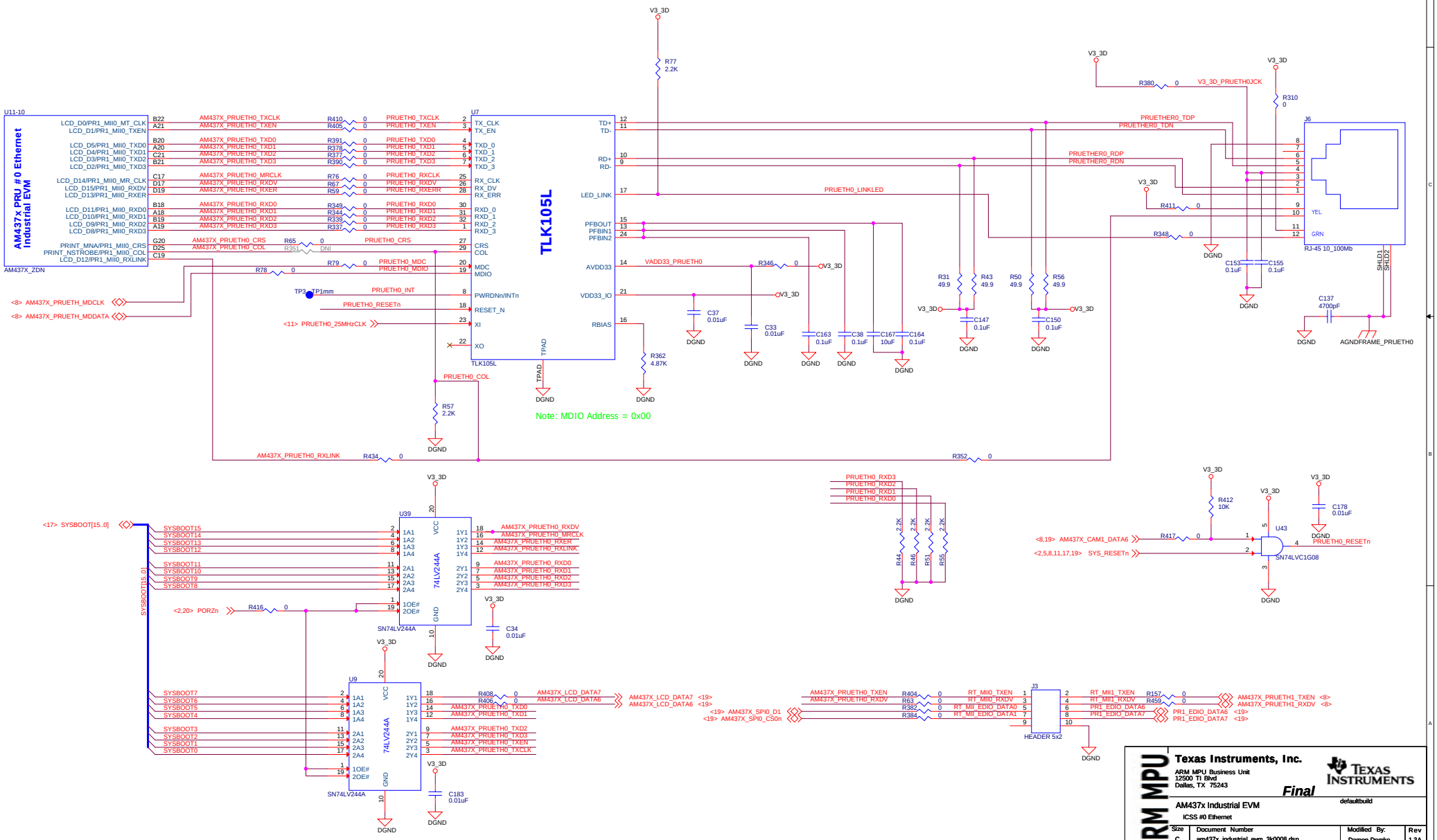
AM437x PRU #0 Ethernet
Industrial EVM
U11-10
AM437X_ZDN
LCD_D0/PR1_MII0_MT_CLK
LCD_D1/PR1_MII0_TXEN
LCD_D5/PR1_MII0_TXD0
LCD_D4/PR1_MII0_TXD1
LCD_D3/PR1_MII0_TXD2
LCD_D2/PR1_MII0_TXD3
LCD_D14/PR1_MII0_MR_CLK
LCD_D15/PR1_MII0_RXDV
LCD_D13/PR1_MII0_RXER
LCD_D11/PR1_MII0_RXD0
LCD_D10/PR1_MII0_RXD1
LCD_D9/PR1_MII0_RXD2
LCD_D8/PR1_MII0_RXD3
PRINT_MNA/PR1_MII0_CRS
PRINT_NSTROBE/PR1_MII0_COL
LCD_D12/PR1_MII0_RXLINK
AM437X_PRUETH0_TXCLK
AM437X_PRUETH0_TXEN
AM437X_PRUETH0_TXD0
AM437X_PRUETH0_TXD1
AM437X_PRUETH0_TXD2
AM437X_PRUETH0_TXD3
AM437X_PRUETH0_MRCLK
AM437X_PRUETH0_RXDV
AM437X_PRUETH0_RXER
AM437X_PRUETH0_RXD0
AM437X_PRUETH0_RXD1
AM437X_PRUETH0_RXD2
AM437X_PRUETH0_RXD3
AM437X_PRUETH0_CRS
AM437X_PRUETH0_COL
PRUETH0_TXCLK
PRUETH0_TXEN
PRUETH0_TXD0
PRUETH0_TXD1
PRUETH0_TXD2
PRUETH0_TXD3
PRUETH0_RXCLK
PRUETH0_RXDV
PRUETH0_RXERR
PRUETH0_RXD0
PRUETH0_RXD1
PRUETH0_RXD2
PRUETH0_RXD3
PRUETH0_CRS
PRUETH0_COL
PRUETH0_MDC
PRUETH0_MDIO
PRUETH0_INT
PRUETH0_RESETn
PRUETH0_25MHzCLK
PRUETH0_LINKLED
PRUETH0_RXLINK
<8> AM437X_PRUETH_MDCLK
<8> AM437X_PRUETH_MDDATA
<11> PRUETH0_25MHzCLK
U7
TLK105L
TLK105L
TX_CLK
TX_EN
TXD_0
TXD_1
TXD_2
TXD_3
RX_CLK
RX_DV
RX_ERR
RXD_0
RXD_1
RXD_2
RXD_3
CRS
COL
MDC
MDIO
PWRDNn/INTn
RESET_N
XI
XO
TPAD
TD+
TD-
RD+
RD-
LED_LINK
PFBOUT
PFBIN1
PFBIN2
AVDD33
VDD33_IO
RBIAS
VADD33_PRUETH0
V3_3D
V3_3D_PRUETH0JCK
R77 2.2K
R310 0
R380 0
R411 0
R348 0
R346 0
R78 0
R79 0
R65 0
R351 DNI
R434 0
R352 0
R362 4.87K
R57 2.2K
R31 49.9
R43 49.9
R50 49.9
R56 49.9
C37 0.01uF
C33 0.01uF
C163 0.1uF
C38 0.1uF
C167 10uF
C164 0.1uF
C147 0.1uF
C150 0.1uF
C153 0.1uF
C155 0.1uF
C137 4700pF
PRUETHER0_TDP
PRUETHER0_TDN
PRUETHER0_RDP
PRUETHER0_RDN
J6
RJ-45 10_100Mb
YEL
GRN
SHLD1
SHLD2
TP3 TP1mm
DGND
AGNDFRAME_PRUETH0
Note: MDIO Address = 0x00
U39
SN74LV244A
74LV244A
VCC
GND
1OE#
2OE#
1A1
1A2
1A3
1A4
2A1
2A2
2A3
2A4
1Y1
1Y2
1Y3
1Y4
2Y1
2Y2
2Y3
2Y4
<17> SYSBOOT[15..0]
SYSBOOT[15..0]
SYSBOOT15
SYSBOOT14
SYSBOOT13
SYSBOOT12
SYSBOOT11
SYSBOOT10
SYSBOOT9
SYSBOOT8
SYSBOOT7
SYSBOOT6
SYSBOOT5
SYSBOOT4
SYSBOOT3
SYSBOOT2
SYSBOOT1
SYSBOOT0
<2,20> PORZn
R416 0
C34 0.01uF
C183 0.01uF
AM437X_PRUETH0_RXDV
AM437X_PRUETH0_MRCLK
AM437X_PRUETH0_RXER
AM437X_PRUETH0_RXLINK
AM437X_PRUETH0_RXD0
AM437X_PRUETH0_RXD1
AM437X_PRUETH0_RXD2
AM437X_PRUETH0_RXD3
AM437X_PRUETH0_TXD0
AM437X_PRUETH0_TXD1
AM437X_PRUETH0_TXD2
AM437X_PRUETH0_TXD3
AM437X_PRUETH0_TXCLK
AM437X_PRUETH0_TXEN
U9
R408 0
R406 0
AM437X_LCD_DATA7
AM437X_LCD_DATA6
<19> AM437X_SPI0_D1
<19> AM437X_SPI0_CS0n
R404 0
R63 0
R382 0
R384 0
RT_MII0_TXEN
RT_MII0_RXDV
RT_MII_EDIO_DATA0
RT_MII_EDIO_DATA1
J3
HEADER 5x2
RT_MII1_TXEN
RT_MII1_RXDV
PR1_EDIO_DATA6
PR1_EDIO_DATA7
R157 0
R459 0
AM437X_PRUETH1_TXEN <8>
AM437X_PRUETH1_RXDV <8>
PR1_EDIO_DATA6 <19>
PR1_EDIO_DATA7 <19>
R44 2.2K
R46 2.2K
R51 2.2K
R55 2.2K
<8,19> AM437X_CAM1_DATA6
<2,5,8,11,17,19> SYS_RESETn
R412 10K
R417 0
U43
SN74LVC1G08
C178 0.01uF
Texas Instruments, Inc.
ARM MPU Business Unit
12500 TI Blvd
Dallas, TX 75243
Final
defaultbuild
AM437x Industrial EVM
ICSS #0 Ethernet
Size C
Document Number am437x_industrial_evm_3k0008.dsn
Modified By: Damon Domke
Rev 1.3A
Date: Friday, August 08, 2014
Sheet: 7 of 20

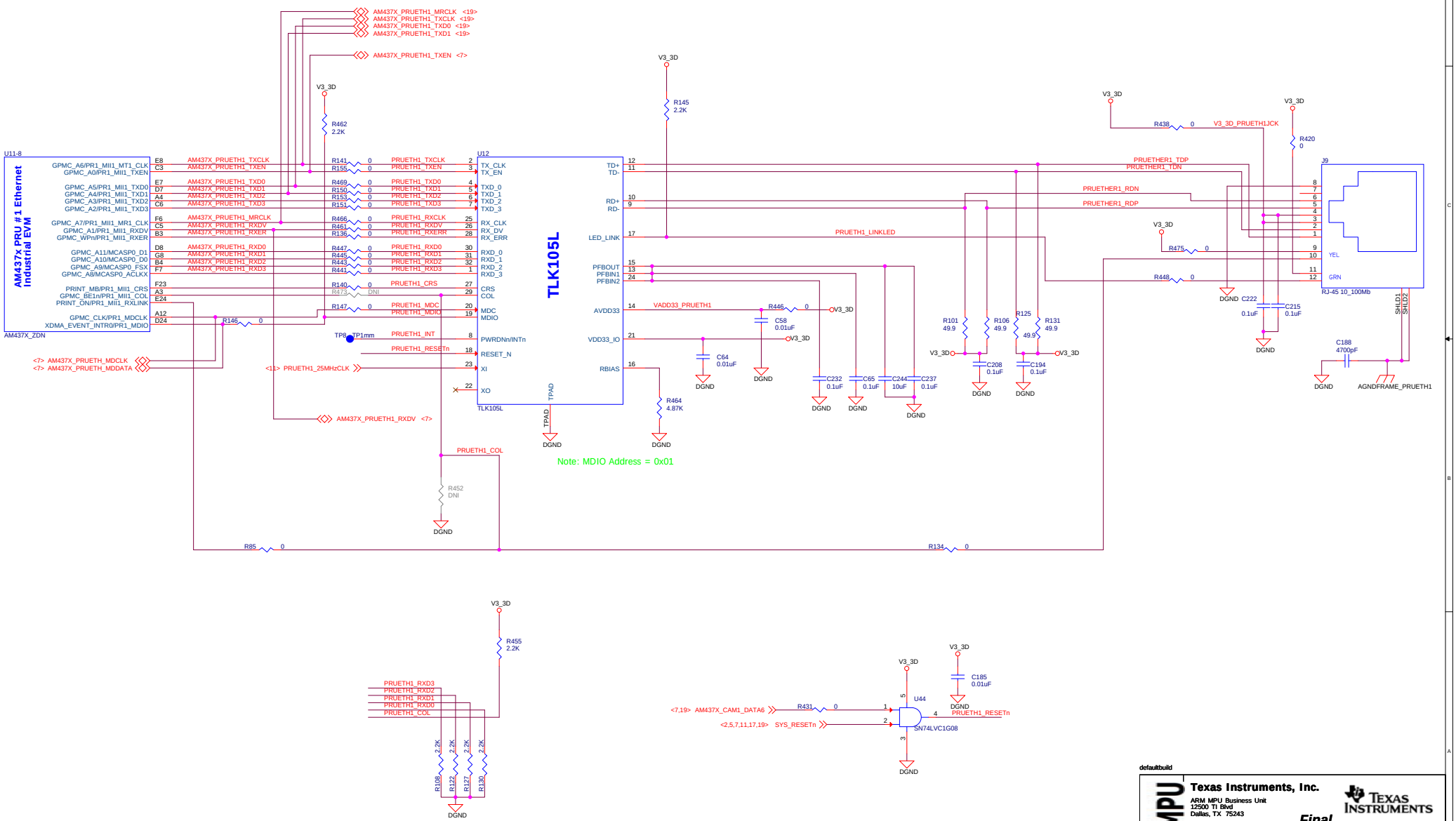


defaultbuild

ARM MPU

**Texas Instruments, Inc.**
ARM MPU Business Unit
12500 TI Blvd
Dallas, TX 75243

*Final*

**AM437x Industrial EVM**
ICSS #1 Ethernet

| Size | Document Number | Modified By: | Rev |
|---|---|---|---|
| C | am437x_industrial_evm_3k0008.dsn | Damon Domke | 1.3A |
| Date: Monday, July 21, 2014 | | Sheet: 8 of 20 | |

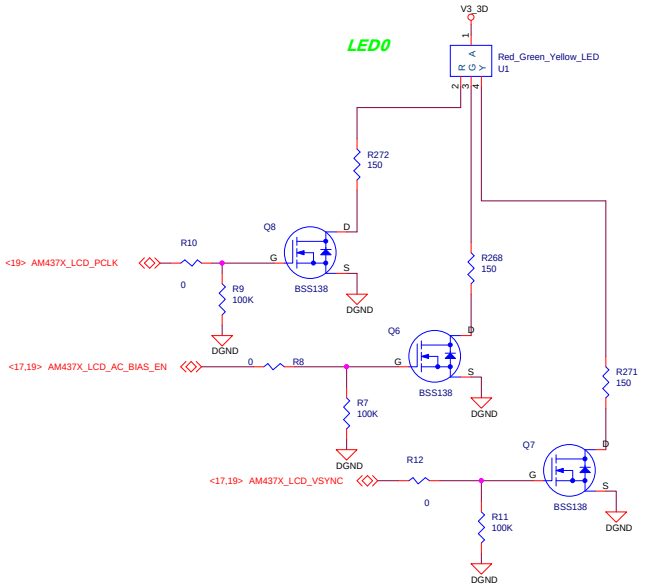


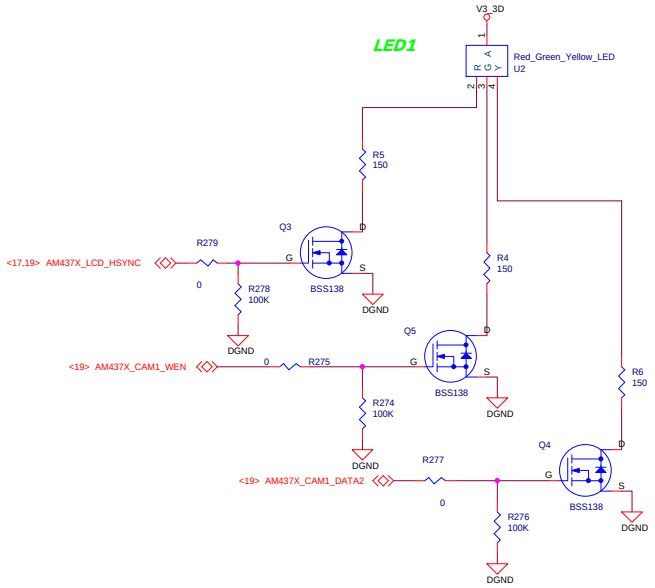


ARM MPU

**Texas Instruments, Inc.**
ARM MPU Business Unit
12500 TI Blvd
Dallas, TX 75243

*Final*

AM437x Industrial EVM
EtherCAT

| Size | Document Number | Modified By: | Rev |
|---|---|---|---|
| C | am437x_industrial_evm_3k0008.dsn | Damon Domke | 1.3A |
| Date: Monday, July 21, 2014 | | Sheet: 9 of 20 | |

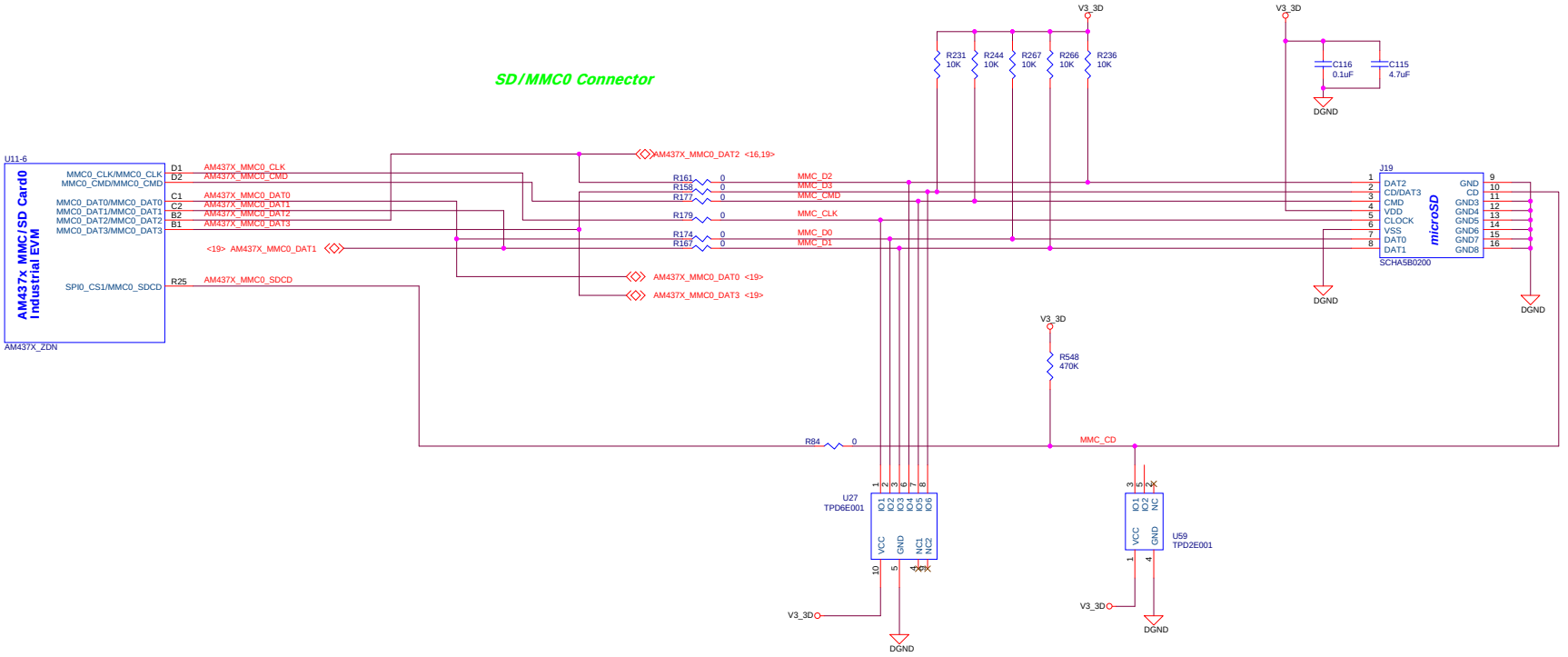


defaultbuild

ARM MPU

**Texas Instruments, Inc.**
ARM MPU Business Unit
12500 TI Blvd
Dallas, TX 75243

*Final*

AM437x Industrial EVM
SDMMC #0 Interface

| Size | Document Number | Modified By: | Rev |
|---|---|---|---|
| C | am437x_industrial_evm_3k0008.dsn | Damon Domke | 1.3A |
| Date: Monday, July 21, 2014 | | Sheet: 10 of 20 | |

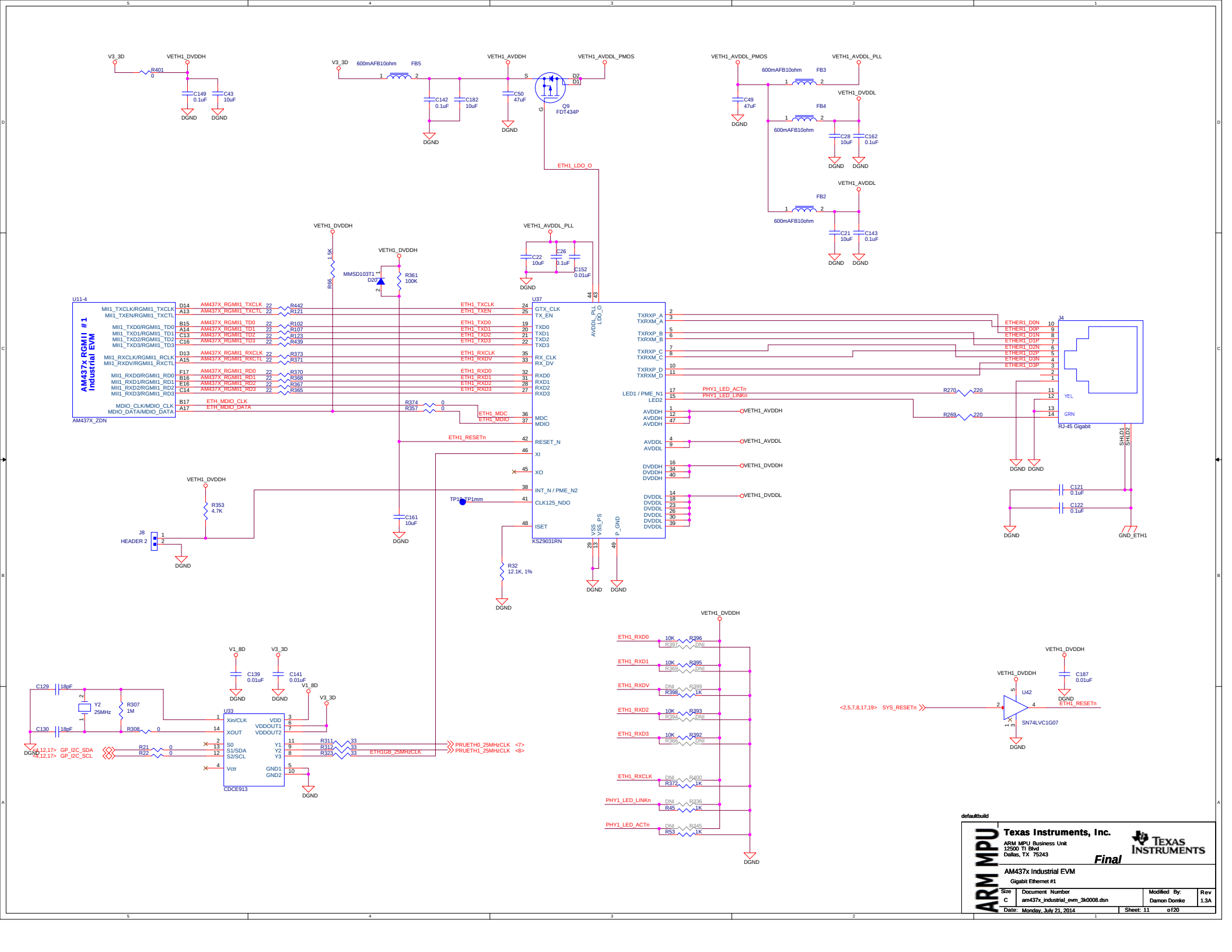
V3_3D
VETH1_DVDDH
R401
0
C149
0.1uF
C43
10uF
DGND
600mAFB10ohm
FB5
C142
0.1uF
C182
10uF
VETH1_AVDDH
C50
47uF
VETH1_AVDDL_PMOS
D2
D1
Q9
FDT434P
ETH1_LDO_O
VETH1_AVDDL_PLL
FB3
FB4
FB2
C49
47uF
C28
10uF
C162
0.1uF
C21
10uF
C143
0.1uF
1.5K
R66
MMSD103T1
D20
R361
100K
C22
10uF
C26
0.1uF
C152
0.01uF
U11-4
AM437X RGMII #1
Industrial EVM
AM437X_ZDN
MII1_TXCLK/RGMII1_TXCLK
MII1_TXEN/RGMII1_TXCTL
MII1_TXD0/RGMII1_TD0
MII1_TXD1/RGMII1_TD1
MII1_TXD2/RGMII1_TD2
MII1_TXD3/RGMII1_TD3
MII1_RXCLK/RGMII1_RCLK
MII1_RXDV/RGMII1_RXCTL
MII1_RXD0/RGMII1_RD0
MII1_RXD1/RGMII1_RD1
MII1_RXD2/RGMII1_RD2
MII1_RXD3/RGMII1_RD3
MDIO_CLK/MDIO_CLK
MDIO_DATA/MDIO_DATA
AM437X_RGMII1_TXCLK
AM437X_RGMII1_TXCTL
AM437X_RGMII1_TD0
AM437X_RGMII1_TD1
AM437X_RGMII1_TD2
AM437X_RGMII1_TD3
AM437X_RGMII1_RXCLK
AM437X_RGMII1_RXCTL
AM437X_RGMII1_RD0
AM437X_RGMII1_RD1
AM437X_RGMII1_RD2
AM437X_RGMII1_RD3
ETH_MDIO_CLK
ETH_MDIO_DATA
R442
R121
R102
R107
R123
R439
R373
R371
R370
R368
R367
R365
R374
R357
ETH1_TXCLK
ETH1_TXEN
ETH1_TXD0
ETH1_TXD1
ETH1_TXD2
ETH1_TXD3
ETH1_RXCLK
ETH1_RXDV
ETH1_RXD0
ETH1_RXD1
ETH1_RXD2
ETH1_RXD3
ETH1_MDC
ETH1_MDIO
ETH1_RESETn
U37
KSZ9031RN
GTX_CLK
TX_EN
TXD0
TXD1
TXD2
TXD3
RX_CLK
RX_DV
RXD0
RXD1
RXD2
RXD3
MDC
MDIO
RESET_N
XI
XO
INT_N / PME_N2
CLK125_NDO
ISET
AVDDL_PLL_LDO_O
VSS
VSS_PS
P_GND
TXRXP_A
TXRXM_A
TXRXP_B
TXRXM_B
TXRXP_C
TXRXM_C
TXRXP_D
TXRXM_D
LED1 / PME_N1
LED2
PHY1_LED_ACTn
PHY1_LED_LINKn
AVDDH
AVDDL
DVDDH
DVDDL
VETH1_AVDDH
VETH1_AVDDL
VETH1_DVDDH
VETH1_DVDDL
J4
RJ-45 Gigabit
ETHER1_D0N
ETHER1_D0P
ETHER1_D1N
ETHER1_D1P
ETHER1_D2N
ETHER1_D2P
ETHER1_D3N
ETHER1_D3P
R270
R269
220
YEL
GRN
SHLD1
SHLD2
GND_ETH1
C121
0.1uF
C122
0.1uF
C161
10uF
R353
4.7K
J8
HEADER 2
TP19 TP1mm
R32
12.1K, 1%
V1_8D
C139
0.01uF
C141
0.01uF
C129
18pF
C130
18pF
Y2
25MHz
R307
1M
R308
0
U33
CDCE913
Xin/CLK
XOUT
S0
S1/SDA
S2/SCL
Vctr
VDD
VDDOUT1
VDDOUT2
GND1
GND2
Y1
Y2
Y3
R21
R22
R311
R312
R323
33
ETH1GB_25MHzCLK
PRUETH0_25MHzCLK
PRUETH1_25MHzCLK
<4,12,17> GP_I2C_SDA
<4,12,17> GP_I2C_SCL
ETH1_RXD0
ETH1_RXD1
ETH1_RXDV
ETH1_RXD2
ETH1_RXD3
ETH1_RXCLK
PHY1_LED_LINKn
PHY1_LED_ACTn
10K
DNI
R396
R397
R395
R369
R399
R398
R393
R394
R392
R366
R400
R372
R336
R45
R345
R53
1K
C187
0.01uF
U42
SN74LVC1G07
<2,5,7,8,17,19> SYS_RESETn
ETH1_RESETn
defaultbuild
ARM MPU
Texas Instruments, Inc.
ARM MPU Business Unit
12500 TI Blvd
Dallas, TX 75243
Final
AM437x Industrial EVM
Gigabit Ethernet #1
Size
C
Document Number
am437x_industrial_evm_3k0008.dsn
Modified By:
Damon Domke
Rev
1.3A
Date:
Monday, July 21, 2014
Sheet: 11 of 20

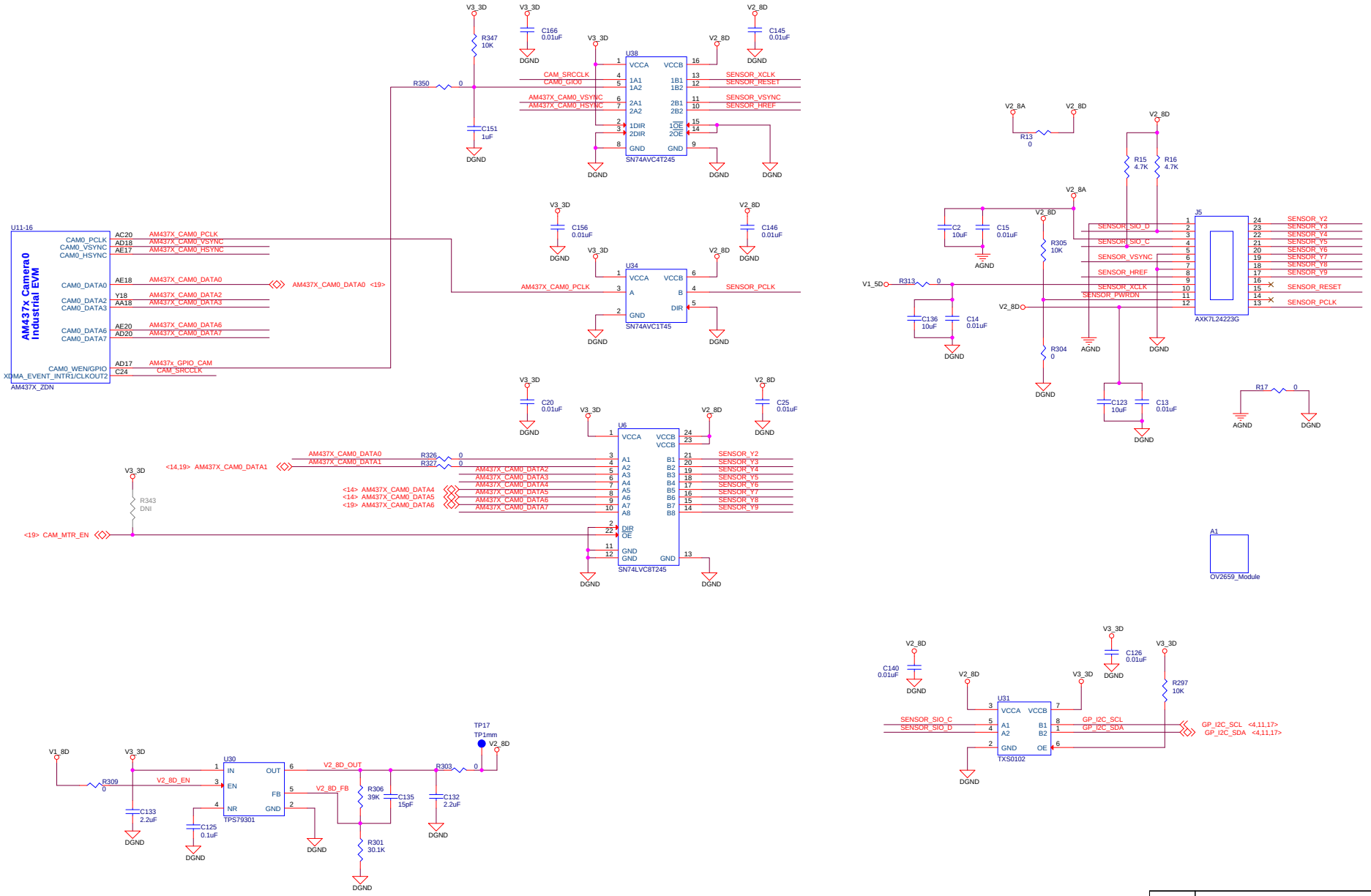


| | | | |
|---|---|---|---|
| ARM MPU | **Texas Instruments, Inc.** | | |
| | ARM MPU Business Unit<br>12500 TI Blvd<br>Dallas, TX 75243 | | |
| | ***Final*** | | |
| | **AM437x Industrial EVM** | | |
| | Camera #0 | | |
| Size: C | Document Number: am437x_industrial_evm_3k0008.dsn | Modified By: Damon Domke | Rev: 1.3A |
| Date: Friday, August 08, 2014 | Sheet: 12 of 120 | | |

## Industrial INPUTS

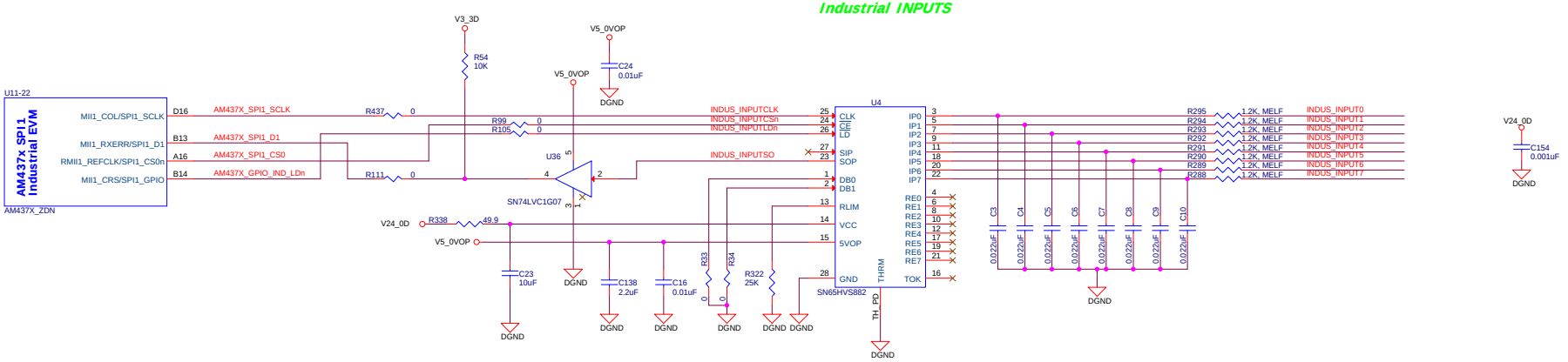


## Digital OUTPUTS

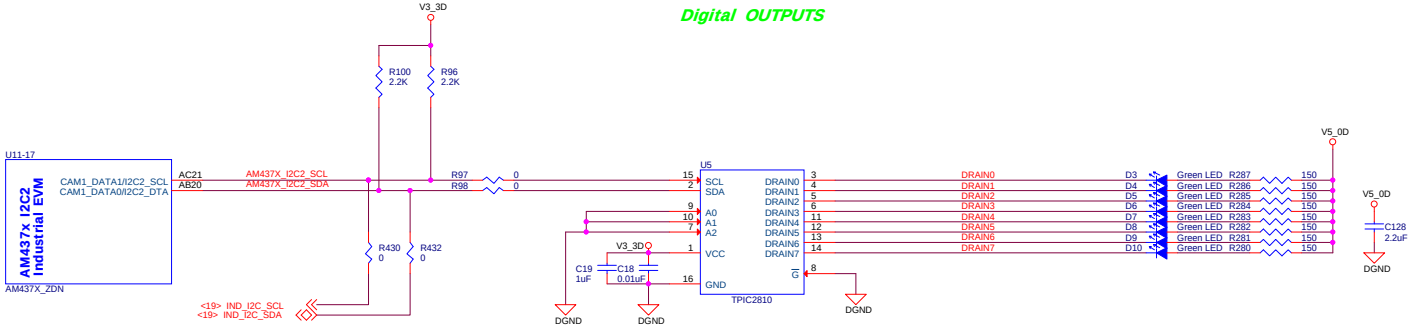


## I/O Expansion Header

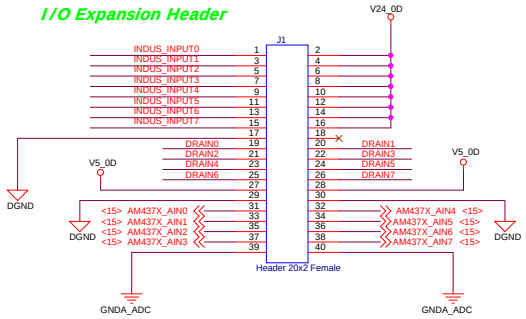


ARM MPU

**Texas Instruments, Inc.**

ARM MPU Business Unit
12500 TI Blvd
Dallas, TX 75243

*Final*

**AM437x Industrial EVM**

Industrial I/O

| Size | Document Number | Modified By: | Rev |
|---|---|---|---|
| C | am437x_industrial_evm_3k0008.dsn | Damon Domke | 1.3A |
| Date: Friday, August 08, 2014 | | Sheet: 13 of 20 | |

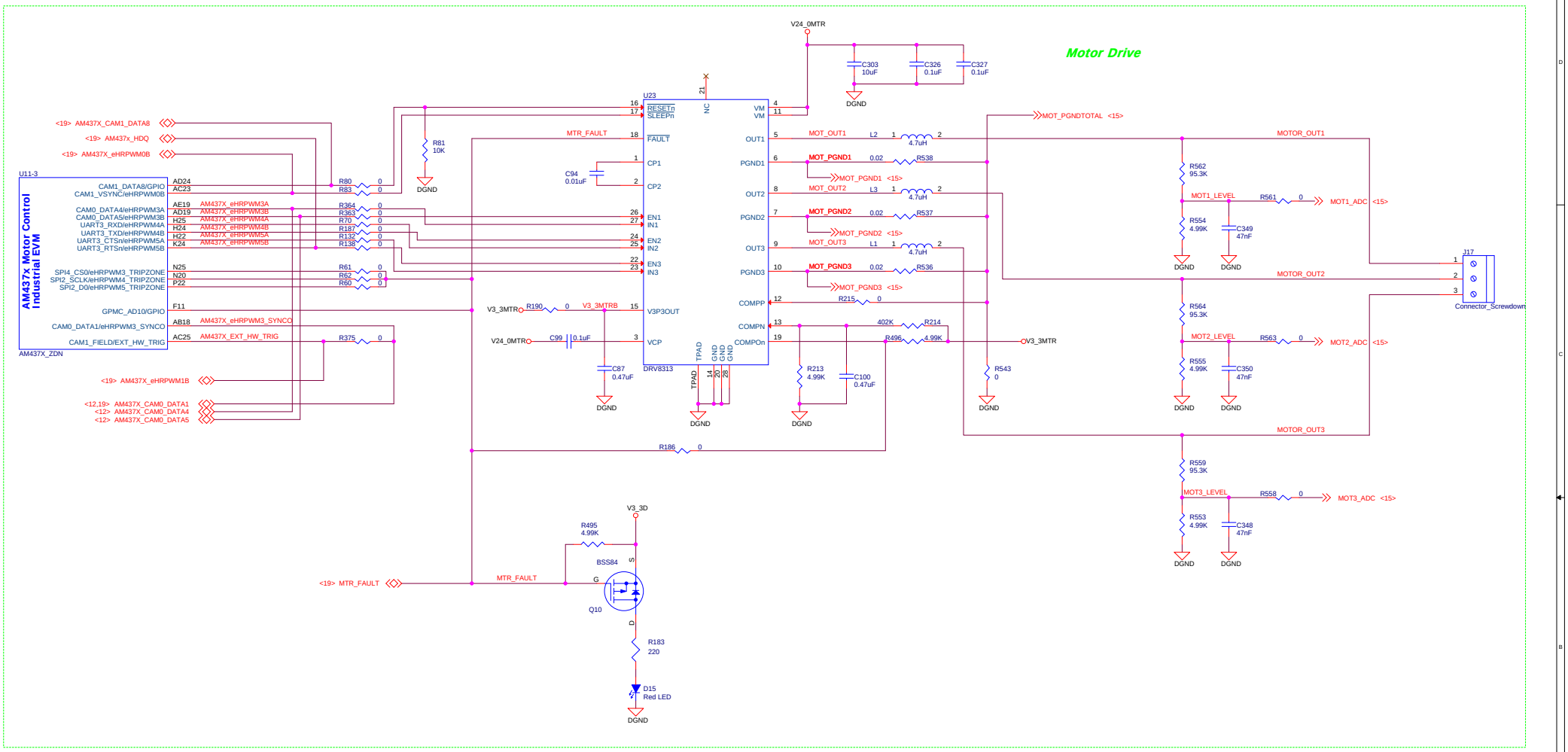


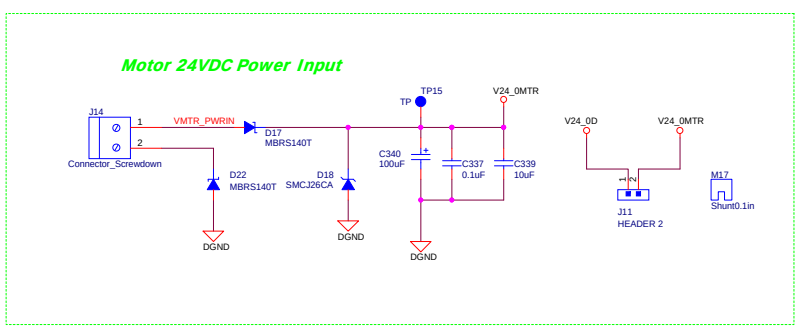


**Texas Instruments, Inc.**
ARM MPU Business Unit
12500 TI Blvd
Dallas, TX 75243

TEXAS INSTRUMENTS

*Final*

AM437x Industrial EVM
Motor Control

| Size | Document Number | Modified By: | Rev |
|---|---|---|---|
| C | am437x_industrial_evm_3k0008.dsn | Damon Domke | 1.3A |

Date: Monday, September 08, 2014 Sheet: 14 of 20

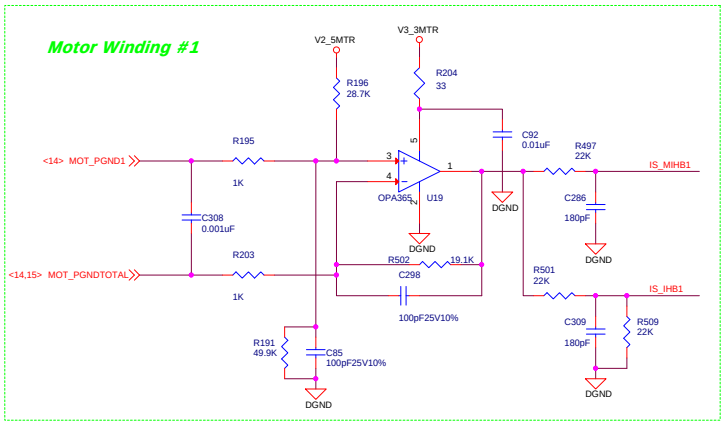


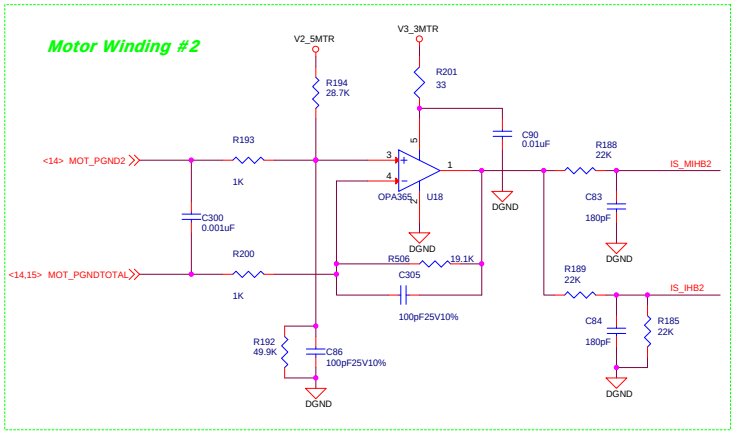


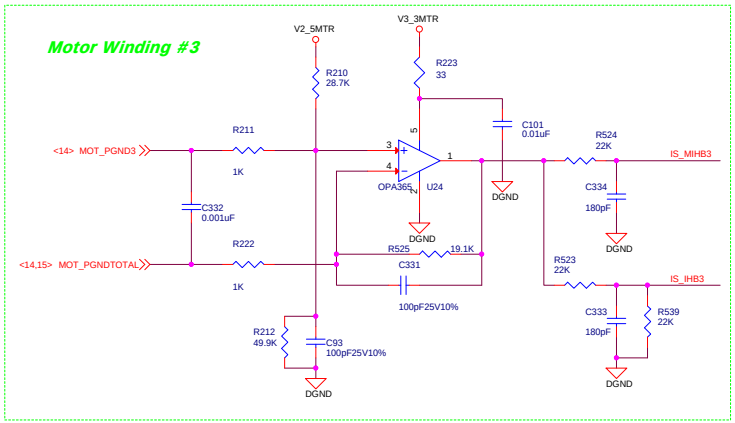


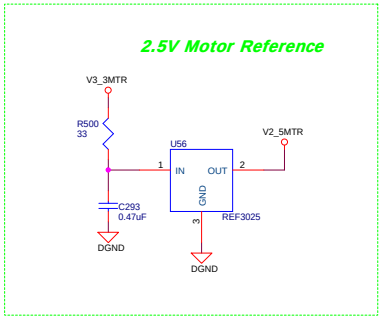


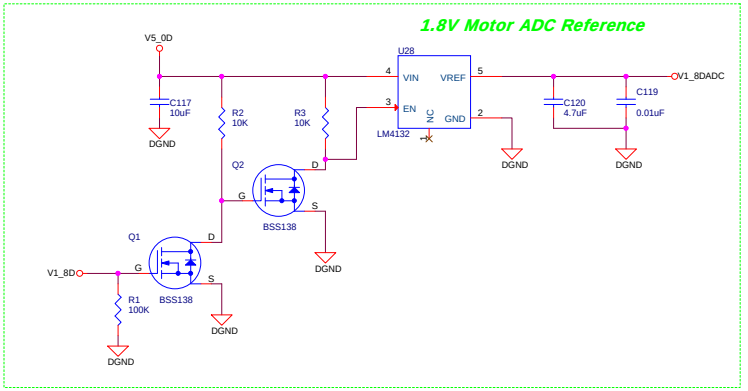


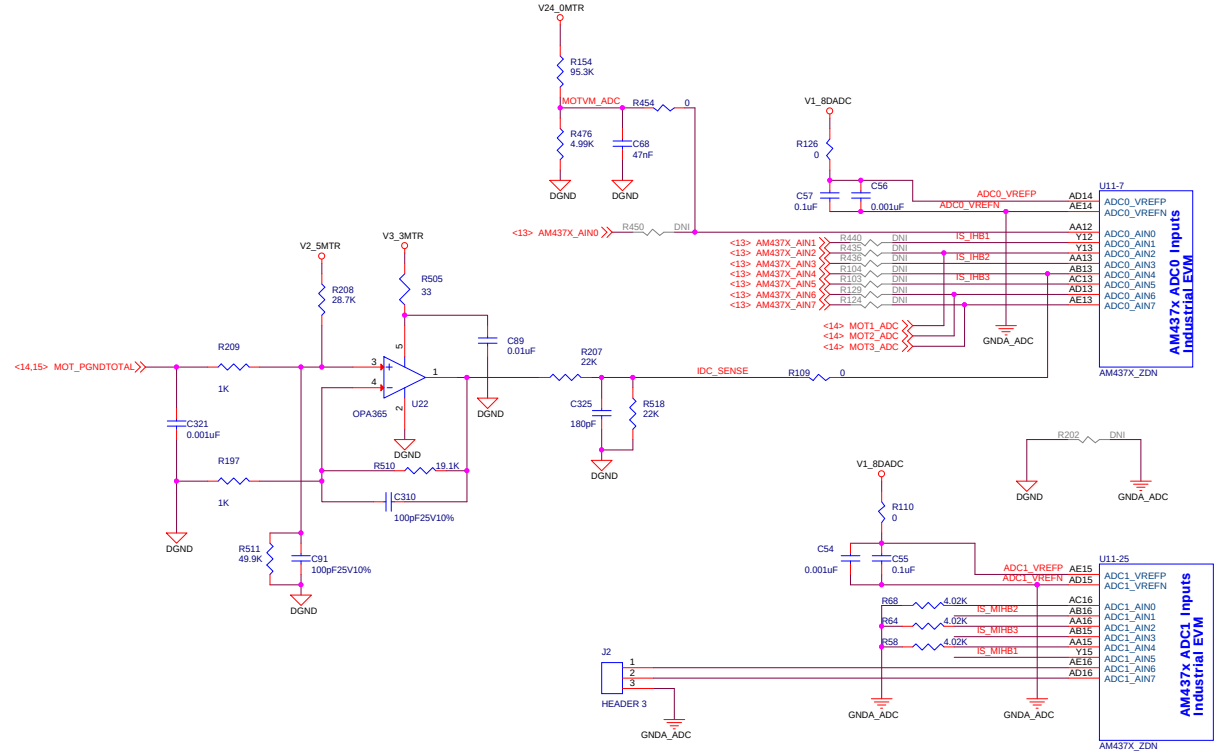



ARM MPU
Texas Instruments, Inc.
ARM MPU Business Unit
12500 TI Blvd
Dallas, TX 75243


Final

AM437x Industrial EVM

Motor Sense

| Size | Document Number | Modified By: | Rev |
|---|---|---|---|
| C | am437x_industrial_evm_3k0008.dsn | Damon Domke | 1.3A |
| Date: Friday, August 08, 2014 | | Sheet: 15 of 120 | |

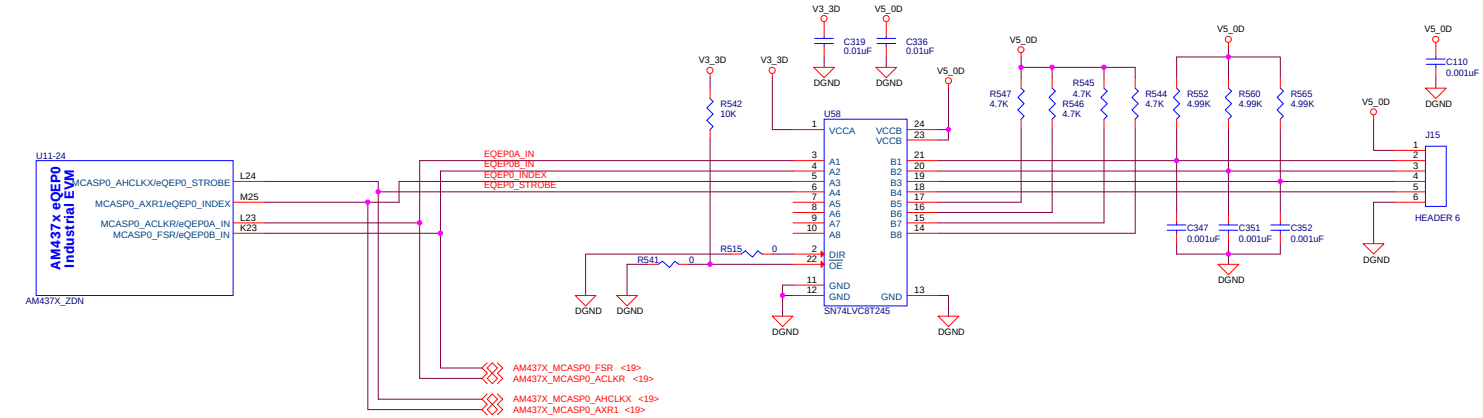


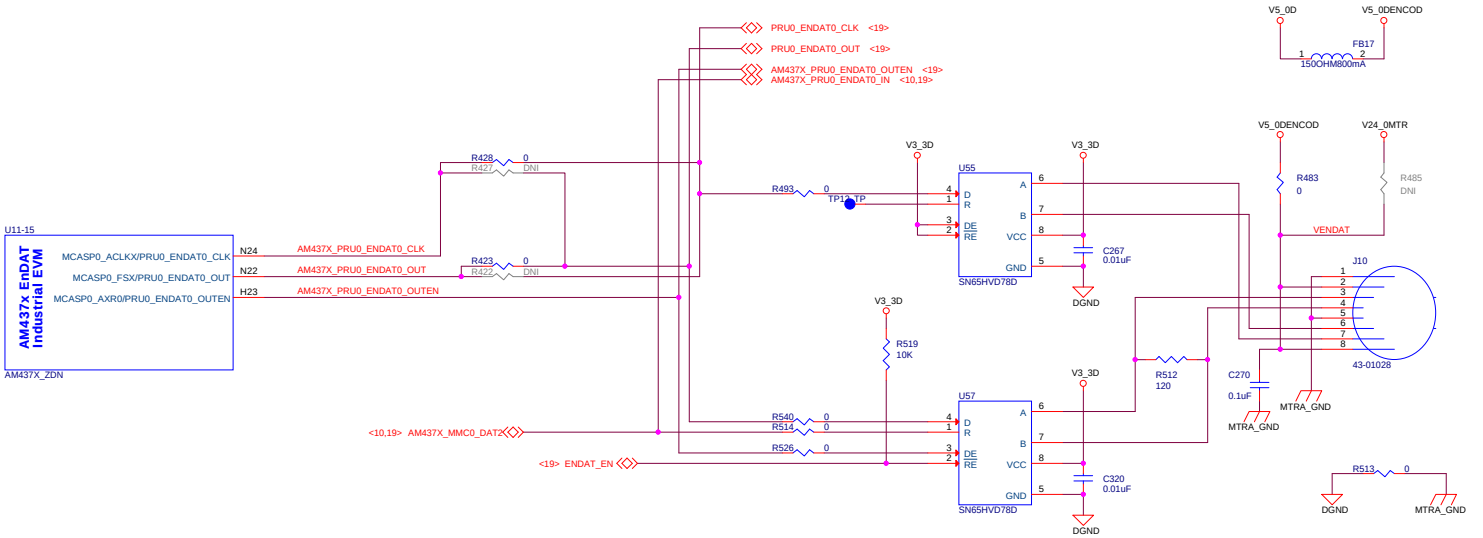


defaultbuild

ARM MPU

**Texas Instruments, Inc.**
ARM MPU Business Unit
12500 TI Blvd
Dallas, TX 75243

*Final*

**AM437x Industrial EVM**
Motor Encoders QEP and EnDAT

| Size | Document Number | Modified By: | Rev |
|---|---|---|---|
| C | am437x_industrial_evm_3k0008.dsn | Damon Domke | 1.3A |
| Date: Friday, August 08, 2014 | | Sheet: 16 of 120 | |

## ID Memory

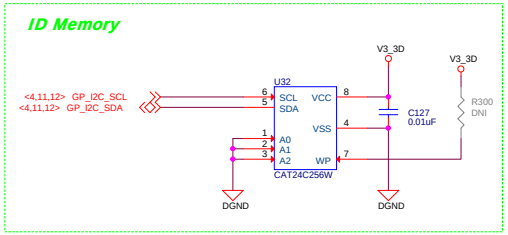


## JTAG Pod Connector

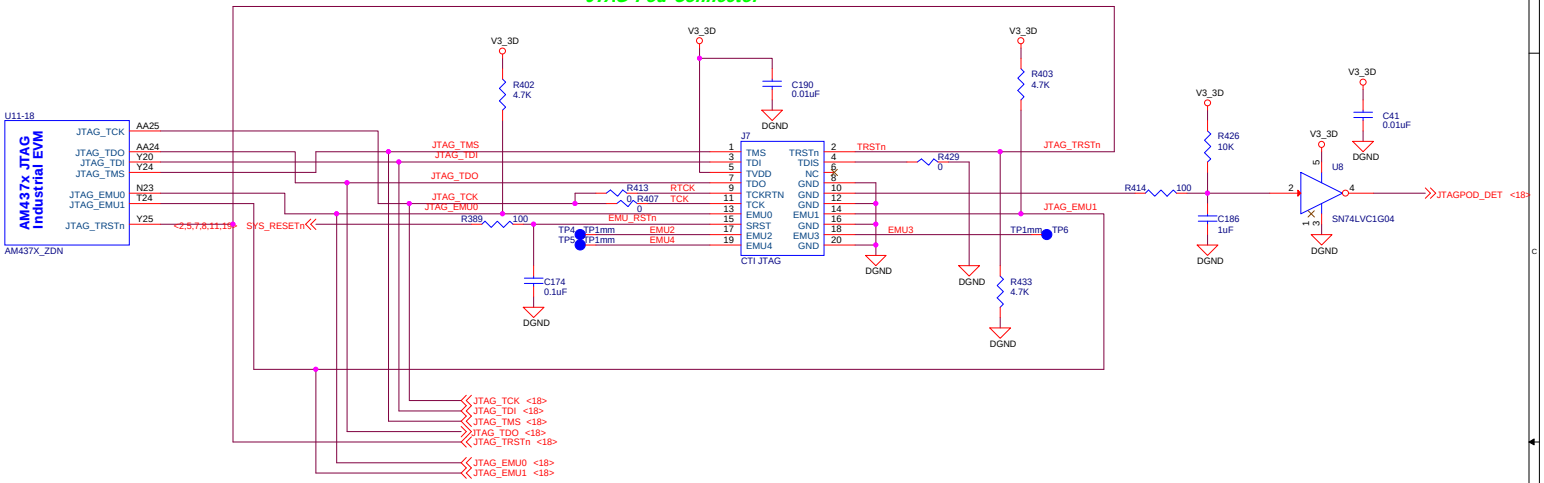


## Boot Configuration

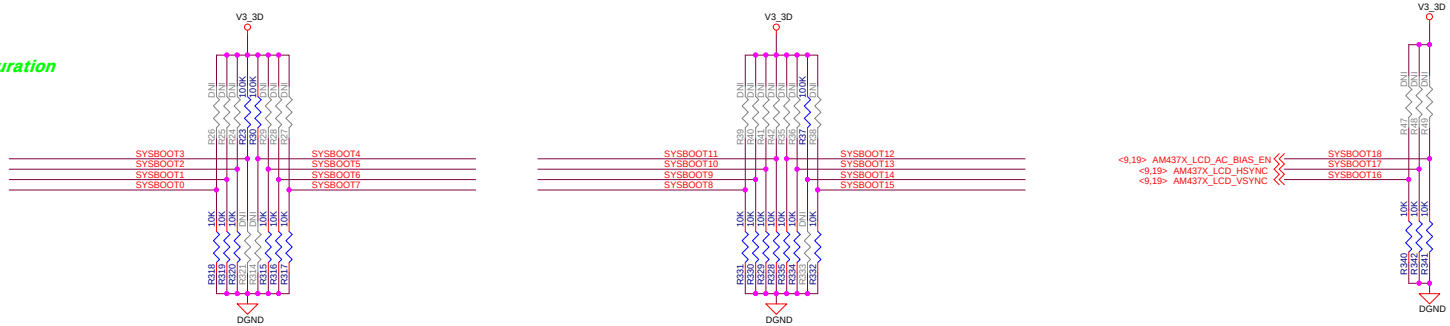


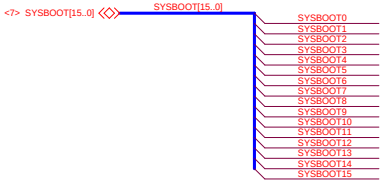


ARM MPU

**Texas Instruments, Inc.**
ARM MPU Business Unit
12500 TI Blvd
Dallas, TX 75243

*Final*

AM437x Industrial EVM
Debug/Configuration

| Size | Document Number | Modified By: | Rev |
|---|---|---|---|
| C | am437x_industrial_evm_3k0008.dsn | Damon Domke | 1.3A |

Date: Friday, August 08, 2014 Sheet: 17 of 20

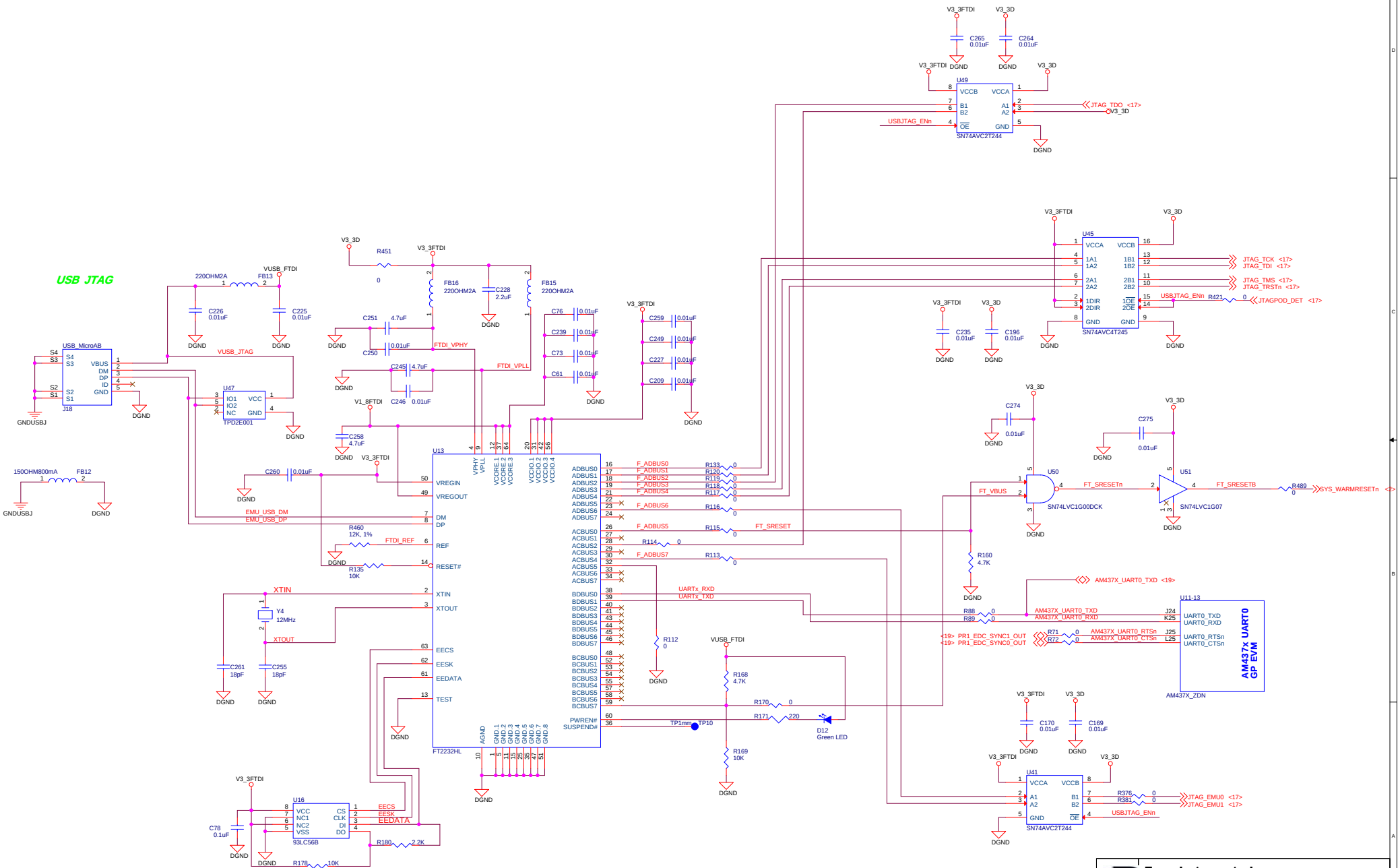
USB JTAG
USB_MicroAB
J18
GNDUSBJ
VUSB_FTDI
VUSB_JTAG
220OHM2A
FB13
C226 0.01uF
C225 0.01uF
U47
TPD2E001
150OHM800mA
FB12
R451
0
FB16 220OHM2A
FB15 220OHM2A
C228 2.2uF
C251 4.7uF
C250 0.01uF
C245 4.7uF
C246 0.01uF
FTDI_VPHY
FTDI_VPLL
V1_8FTDI
C258 4.7uF
C260 0.01uF
C76 0.01uF
C239 0.01uF
C73 0.01uF
C61 0.01uF
C259 0.01uF
C249 0.01uF
C227 0.01uF
C209 0.01uF
U13
FT2232HL
VREGIN
VREGOUT
DM
DP
REF
RESET#
XTIN
XTOUT
EECS
EESK
EEDATA
TEST
R460 12K, 1%
FTDI_REF
R135 10K
Y4 12MHz
C261 18pF
C255 18pF
EMU_USB_DM
EMU_USB_DP
ADBUS0
ADBUS1
ADBUS2
ADBUS3
ADBUS4
ADBUS5
ADBUS6
ADBUS7
F_ADBUS0
F_ADBUS1
F_ADBUS2
F_ADBUS3
F_ADBUS4
F_ADBUS5
F_ADBUS6
F_ADBUS7
R133 0
R120 0
R119 0
R118 0
R117 0
R116 0
R115 0
R114 0
R113 0
FT_SRESET
ACBUS0
ACBUS1
ACBUS2
ACBUS3
ACBUS4
ACBUS5
ACBUS6
ACBUS7
BDBUS0
BDBUS1
BDBUS2
BDBUS3
BDBUS4
BDBUS5
BDBUS6
BDBUS7
UARTx_RXD
UARTx_TXD
R112 0
BCBUS0
BCBUS1
BCBUS2
BCBUS3
BCBUS4
BCBUS5
BCBUS6
BCBUS7
PWREN#
SUSPEND#
TP1mm_TP10
R168 4.7K
R170 0
R171 220
R169 10K
D12 Green LED
U16
93LC56B
C78 0.1uF
R180 2.2K
R178 10K
U49
SN74AVC2T244
USBJTAG_ENn
JTAG_TDO <17>
U45
SN74AVC4T245
JTAG_TCK <17>
JTAG_TDI <17>
JTAG_TMS <17>
JTAG_TRSTn <17>
R421 0
JTAGPOD_DET <17>
C235 0.01uF
C196 0.01uF
C274 0.01uF
C275 0.01uF
U50
SN74LVC1G00DCK
U51
SN74LVC1G07
FT_VBUS
FT_SRESETn
FT_SRESETB
R489 0
SYS_WARMRESETn <2>
R160 4.7K
AM437X_UART0_TXD <19>
AM437X_UART0_RXD
AM437X_UART0_RTSn
AM437X_UART0_CTSn
<19> PR1_EDC_SYNC1_OUT
<19> PR1_EDC_SYNC0_OUT
R88 0
R89 0
R71 0
R72 0
J24
J25
K25
L25
U11-13
UART0_TXD
UART0_RXD
UART0_RTSn
UART0_CTSn
AM437x UART0 GP EVM
AM437X_ZDN
C170 0.01uF
C169 0.01uF
U41
SN74AVC2T244
R376 0
R381 0
JTAG_EMU0 <17>
JTAG_EMU1 <17>
Texas Instruments, Inc.
ARM MPU Business Unit
12500 TI Blvd
Dallas, TX 75243
Final
AM437x Industrial EVM
USB JTAG
Size C
Document Number am437x_industrial_evm_3k0008.dsn
Modified By: Damon Domke
Rev 1.3A
Date: Friday, August 08, 2014
Sheet: 18 of 20

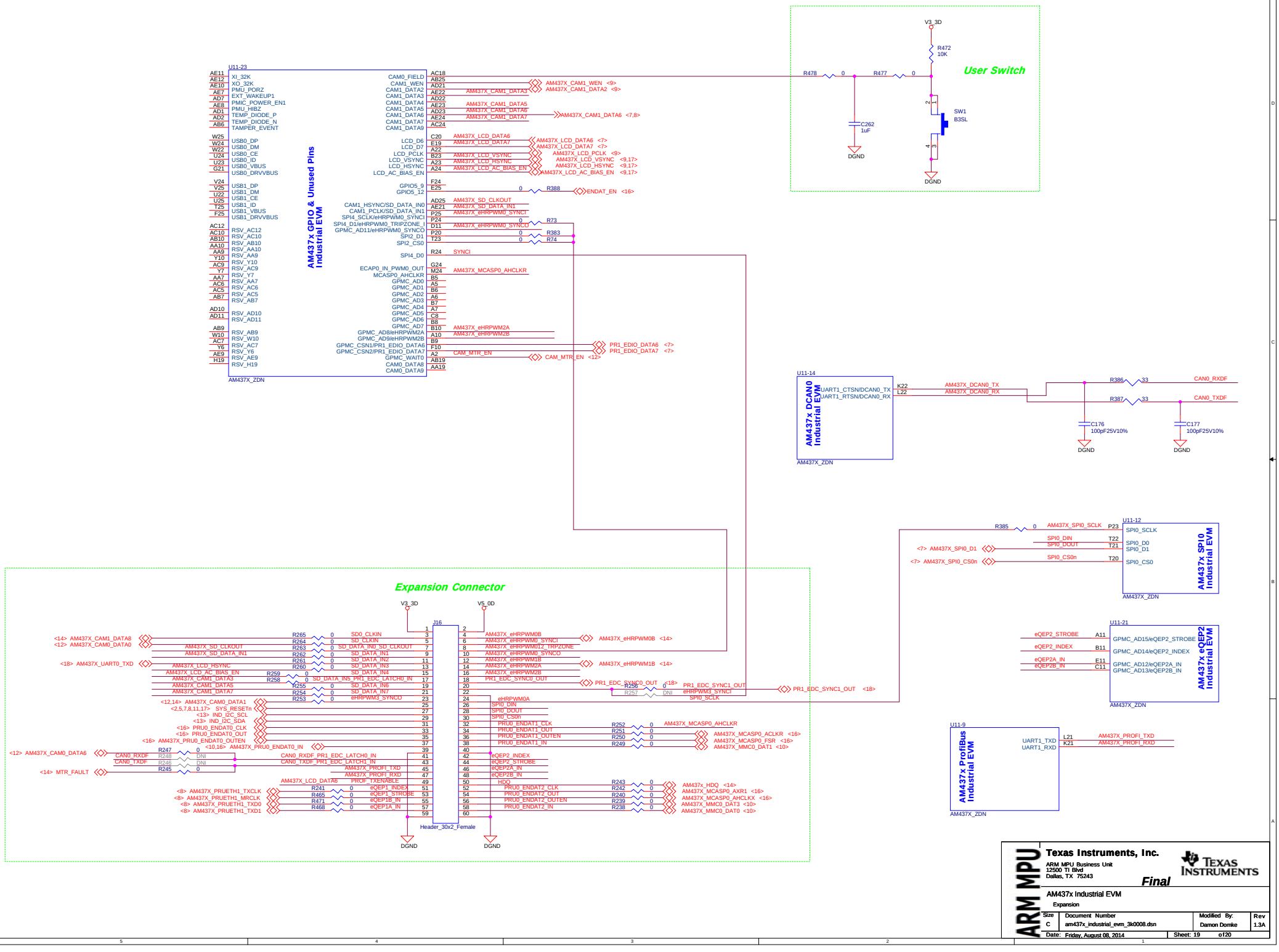
User Switch
V3_3D
R472
10K
R478
R477
SW1
B3SL
C262
1uF
DGND
U11-23
AM437x GPIO & Unused Pins
Industrial EVM
AM437X_ZDN
U11-14
AM437x DCAN0
Industrial EVM
R386
R387
33
CAN0_RXDF
CAN0_TXDF
C176
C177
100pF25V10%
U11-12
AM437x SPI0
Industrial EVM
R385
AM437X_SPI0_SCLK
SPI0_DIN
SPI0_DOUT
SPI0_CS0n
U11-21
AM437x eQEP2
Industrial EVM
eQEP2_STROBE
eQEP2_INDEX
eQEP2A_IN
eQEP2B_IN
U11-9
AM437x ProfiBus
Industrial EVM
UART1_TXD
UART1_RXD
AM437X_PROFI_TXD
AM437X_PROFI_RXD
Expansion Connector
V5_0D
J16
Header_30x2_Female
R73
R383
R74
R388
ENDAT_EN
SYNCI
CAM_MTR_EN
PR1_EDIO_DATA6
PR1_EDIO_DATA7
AM437X_MCASP0_AHCLKR
AM437X_CAM1_WEN
AM437X_CAM1_DATA2
AM437X_CAM1_DATA3
AM437X_CAM1_DATA5
AM437X_CAM1_DATA6
AM437X_CAM1_DATA7
AM437X_LCD_DATA6
AM437X_LCD_DATA7
AM437X_LCD_VSYNC
AM437X_LCD_HSYNC
AM437X_LCD_AC_BIAS_EN
AM437X_LCD_PCLK
AM437X_SD_CLKOUT
AM437X_SD_DATA_IN1
AM437X_EHRPWM0_SYNCI
AM437X_EHRPWM0_SYNCO
AM437X_EHRPWM2A
AM437X_EHRPWM2B
AM437X_DCAN0_TX
AM437X_DCAN0_RX
AM437X_SPI0_D1
AM437X_SPI0_CS0n
AM437X_EHRPWM0B
AM437X_EHRPWM1B
PR1_EDC_SYNC0_OUT
PR1_EDC_SYNC1_OUT
AM437X_MCASP0_ACLKR
AM437X_MCASP0_FSR
AM437X_MMC0_DAT1
AM437X_HDQ
AM437X_MCASP0_AXR1
AM437X_MCASP0_AHCLKX
AM437X_MMC0_DAT3
AM437X_MMC0_DAT0
SD0_CLKIN
SD_CLKIN
SD_DATA_IN0_SD_CLKOUT
SD_DATA_IN1
SD_DATA_IN2
SD_DATA_IN3
SD_DATA_IN4
SD_DATA_IN5_PR1_EDC_LATCH0_IN
SD_DATA_IN6
SD_DATA_IN7
eHRPWM3_SYNCO
SYS_RESETn
IND_I2C_SCL
IND_I2C_SDA
PRU0_ENDAT0_CLK
PRU0_ENDAT0_OUT
PRU0_ENDAT0_OUTEN
PRU0_ENDAT0_IN
CAN0_RXDF_PR1_EDC_LATCH0_IN
CAN0_TXDF_PR1_EDC_LATCH1_IN
AM437X_PROFI_TXD
AM437X_PROFI_RXD
PROF_TXENABLE
eQEP1_INDEX
eQEP1_STROBE
eQEP1B_IN
eQEP1A_IN
MTR_FAULT
Texas Instruments, Inc.
ARM MPU Business Unit
12500 TI Blvd
Dallas, TX 75243
Final
AM437x Industrial EVM
Expansion
Size C
Document Number am437x_industrial_evm_3k0008.dsn
Modified By: Damon Domke
Rev 1.3A
Date: Friday, August 08, 2014
Sheet: 19 of 20

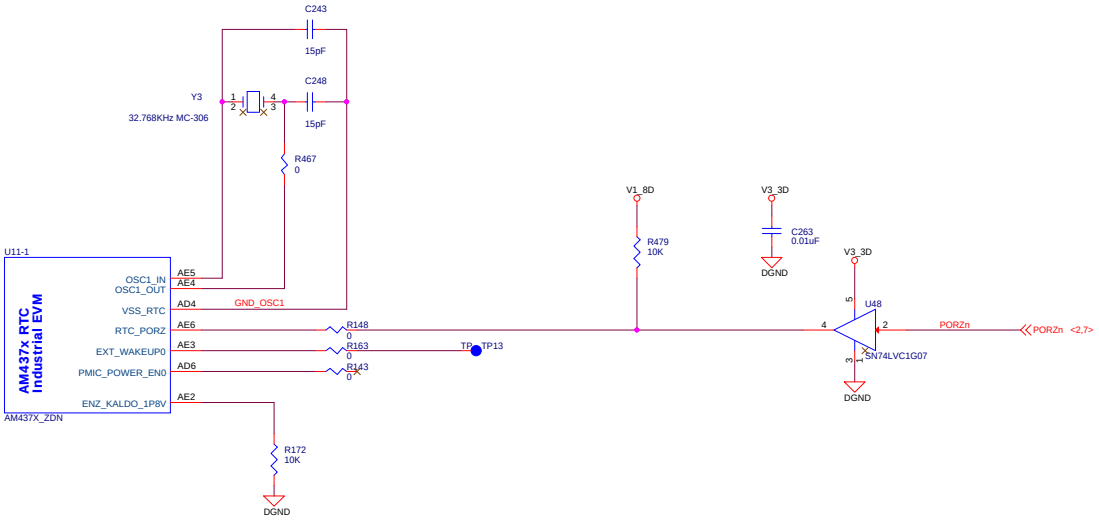


| | | | |
|---|---|---|---|
| ARM MPU | **Texas Instruments, Inc.**<br>ARM MPU Business Unit<br>12500 TI Blvd<br>Dallas, TX 75243 | | |
| | ***Final*** | | |
| | AM437x Industrial EVM<br>RTC | | |
| Size: C | Document Number: am437x_industrial_evm_3k0008.dsn | Modified By: Damon Domke | Rev: 1.3A |
| Date: Monday, July 21, 2014 | Sheet: 20 of 20 | | |