ARM MPU AM437X Industrial EVM
ZDN Package

-See the Hardware User Guide for board details
-See the Errata Document for design Issues
-See the PCB Build Specification for PCB Details

M1 Screw4-40_1/4in
M2 Screw4-40_1/4in
M3 Screw4-40_1/4in
M4 Screw4-40_1/4in
M5 Screw4-40_1/4in
M6 Screw4-40_1/4in
M7 Screw4-40_1/4in
M8 Screw4-40_1/4in
M9 Standoff4-40_round_5/8inlong
M10 Standoff4-40_round_5/8inlong
M11 Standoff4-40_round_5/8inlong
M12 Standoff4-40_round_5/8inlong
M13 Rubber Feet
M14 Rubber Feet
M15 Rubber Feet
M16 Rubber Feet
PCB1 AM437x Industrial EVM Bare PCB

Catalog Processors

Texas Instruments, Inc.
Catalog Processors Business Unit
12500 TI Blvd
Dallas, TX 75243

Final

AM437x Industrial EVM
Title Page

Size	Document Number	Modified By:	Rev
C	am437x_industrial_evm_3k0008.dsn	Paul Eaves	1.4A

Date: Tuesday, August 11, 2015 Sheet: 1 of 20

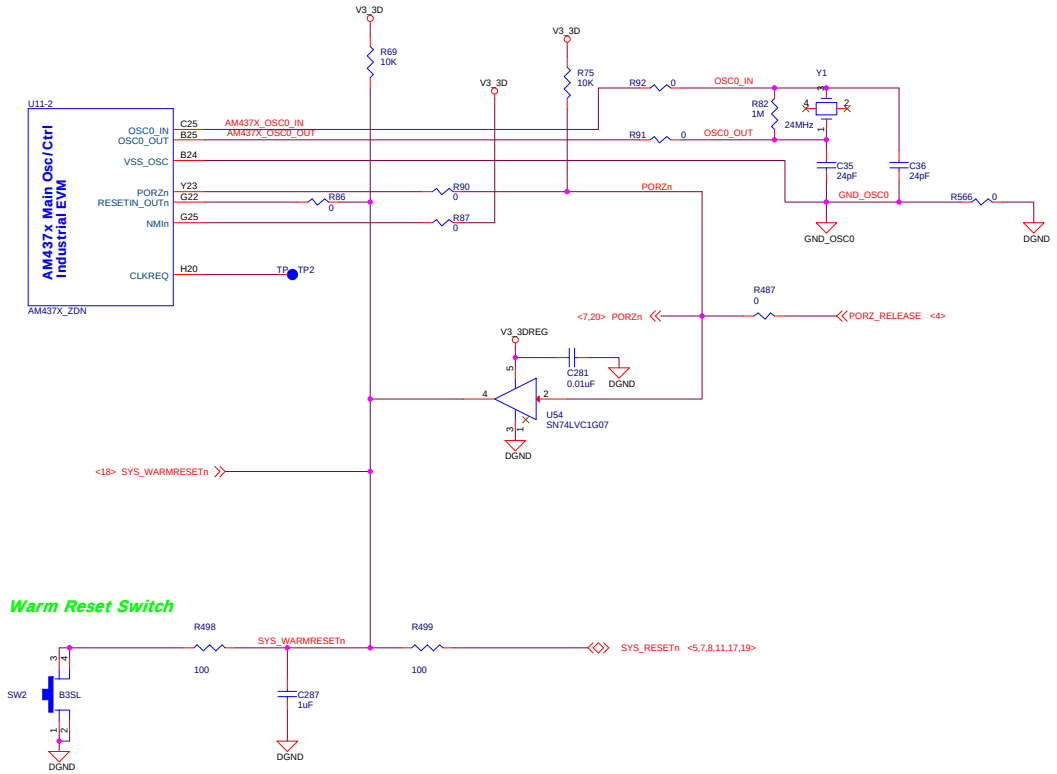

defaultbuild

Catalog Processors

Texas Instruments, Inc.

Catalog Processors Business Unit
12500 TI Blvd
Dallas, TX 75243

Final

AM437x Industrial EVM

Processor System

Size	Document Number	Modified By:	Rev
C	am437x_industrial_evm_3k0008.dsn	Paul Eaves	1.4A

Date: Tuesday, August 11, 2015 Sheet: 2 of 20

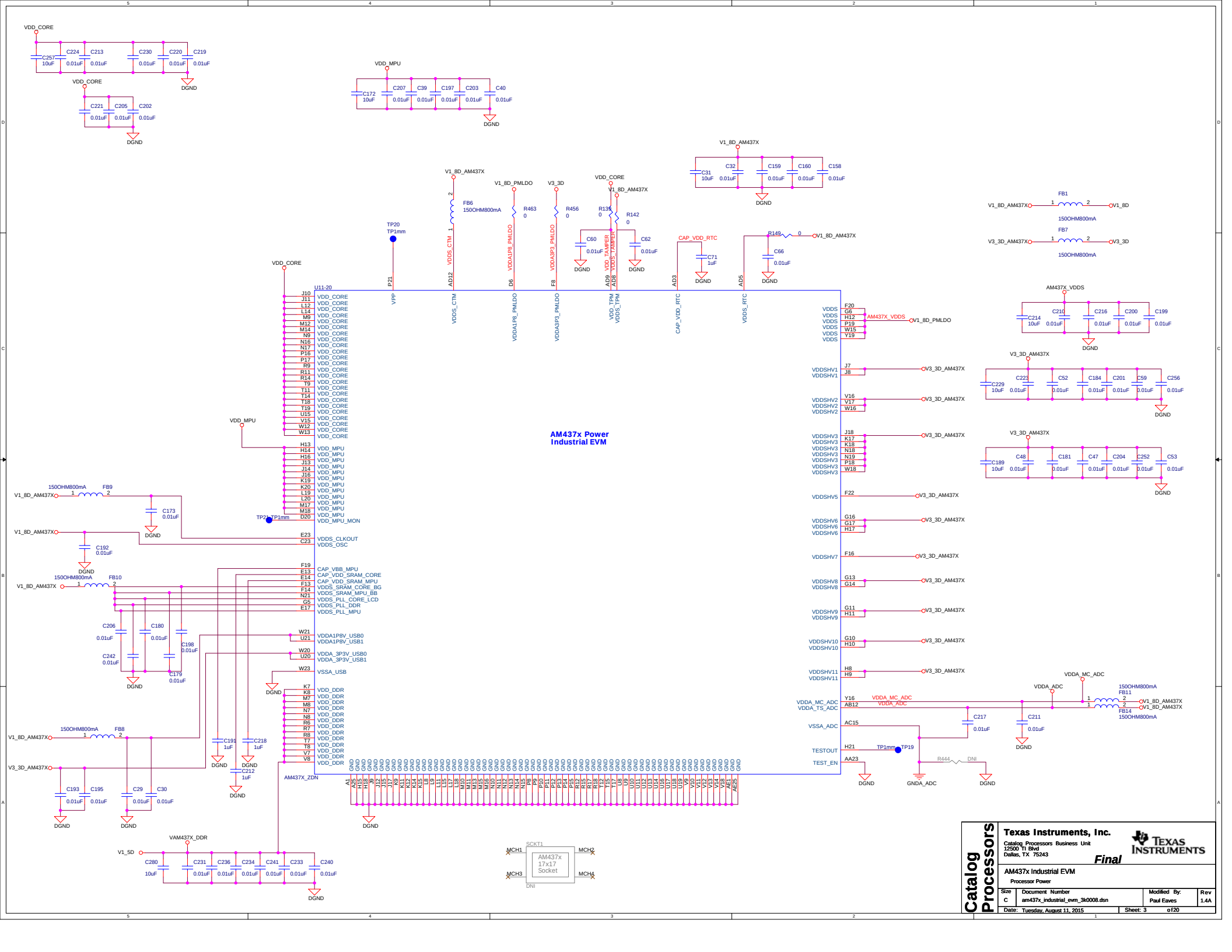

Texas Instruments, Inc.			
Catalog Processors Business Unit 12500 TI Blvd Dallas, TX 75243			
Final			
AM437x Industrial EVM			
Processor Power			
Size: C	Document Number: am437x_industrial_evm_3k0008.dsn	Modified By: Paul Eaves	Rev: 1.4A
Date: Tuesday, August 11, 2015	Sheet: 3 of 120		

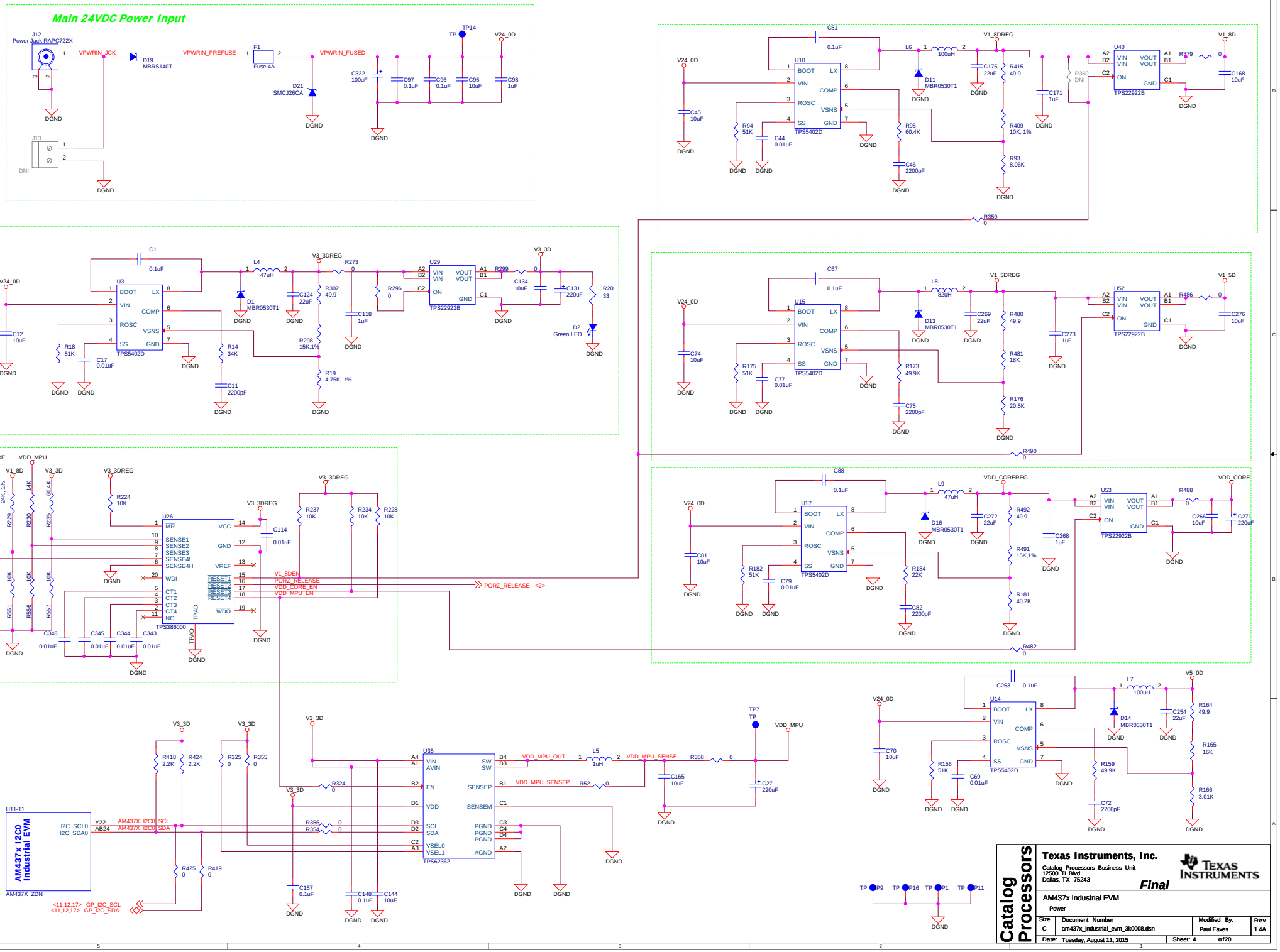
Main 24VDC Power Input
J12
Power Jack RAPC722X
VPWRIN_JCK
D19
MBRS140T
VPWRIN_PREFUSE
F1
Fuse 4A
VPWRIN_FUSED
TP14
V24_0D
D21
SMCJ26CA
C322 100uF
C97 0.1uF
C96 0.1uF
C95 10uF
C98 1uF
J13
DNI
DGND
C51 0.1uF
U10
TPS5402D
L6 100uH
D11 MBR0530T1
C175 22uF
R415 49.9
R409 10K, 1%
R93 8.06K
R95 60.4K
C46 2200pF
R94 51K
C44 0.01uF
C45 10uF
C171 1uF
R360 DNI
U40
TPS22922B
R379
C168 10uF
V1_8DREG
V1_8D
R359 0
C1 0.1uF
U3
TPS5402D
L4 47uH
D1 MBR0530T1
C124 22uF
R302 49.9
R298 15K,1%
R19 4.75K, 1%
C118 1uF
R273 0
R296 0
U29
TPS22922B
R299
C134 10uF
C131 220uF
R20 33
D2 Green LED
V3_3D
V3_3DREG
C12 10uF
R18 51K
C17 0.01uF
R14 34K
C11 2200pF
C67 0.1uF
U15
TPS5402D
L8 82uH
D13 MBR0530T1
C269 22uF
R480 49.9
R481 18K
R176 20.5K
R175 51K
C77 0.01uF
C75 2200pF
C74 10uF
C273 1uF
U52
TPS22922B
R486
C276 10uF
V1_5DREG
V1_5D
R490 0
VDD_CORE
VDD_MPU
V1_8D
R227 14K
R229 24K, 1%
R230 14K
R235 60.4K
R224 10K
U26
TPS386000
SENSE1
SENSE2
SENSE3
SENSE4L
SENSE4H
WDI
CT1
CT2
CT3
CT4
NC
VCC
GND
VREF
RESET1
RESET2
RESET3
RESET4
WDO
TPAD
C114 0.01uF
R237 10K
R234 10K
R228 10K
R550 10K
R551 10K
R556 10K
R557 10K
C346 0.01uF
C345 0.01uF
C344 0.01uF
C343 0.01uF
V1_8DEN
PORZ_RELEASE
VDD_CORE_EN
VDD_MPU_EN
PORZ_RELEASE <2>
C88 0.1uF
U17
TPS5402D
L9 47uH
D16 MBR0530T1
C272 22uF
R492 49.9
R491 15K,1%
R181 40.2K
R182 51K
C79 0.01uF
C82 2200pF
C81 10uF
C268 1uF
U53
TPS22922B
R488
C266 10uF
C271 220uF
VDD_COREREG
R482 0
U11-11
AM437x I2C0
Industrial EVM
AM437X_ZDN
I2C_SCL0
I2C_SDA0
AM437X_I2C0_SCL
AM437X_I2C0_SDA
<11,12,17> GP_I2C_SCL
<11,12,17> GP_I2C_SDA
R418 2.2K
R424 2.2K
R325 0
R355 0
R324 0
R356 0
R354 0
R425 0
R419 0
C157 0.1uF
C148 0.1uF
C144 10uF
U35
TPS62362
VDD_MPU_OUT
L5 1uH
VDD_MPU_SENSE
R358 0
VDD_MPU_SENSEP
R52 0
C165 10uF
C27 220uF
TP7
TP
C253 0.1uF
U14
TPS5402D
L7 100uH
D14 MBR0530T1
C254 22uF
R164 49.9
R165 16K
R166 3.01K
R156 51K
C69 0.01uF
C70 10uF
R159 49.9K
C72 2200pF
V5_0D
TP_P9
TP_P16
TP_P1
TP_P11
Catalog Processors
Texas Instruments, Inc.
Catalog Processors Business Unit
12500 TI Blvd
Dallas, TX 75243
Final
AM437x Industrial EVM
Power
Size C
Document Number am437x_industrial_evm_3k0008.dsn
Modified By: Paul Eaves
Rev 1.4A
Date: Tuesday, August 11, 2015
Sheet: 4 of 20

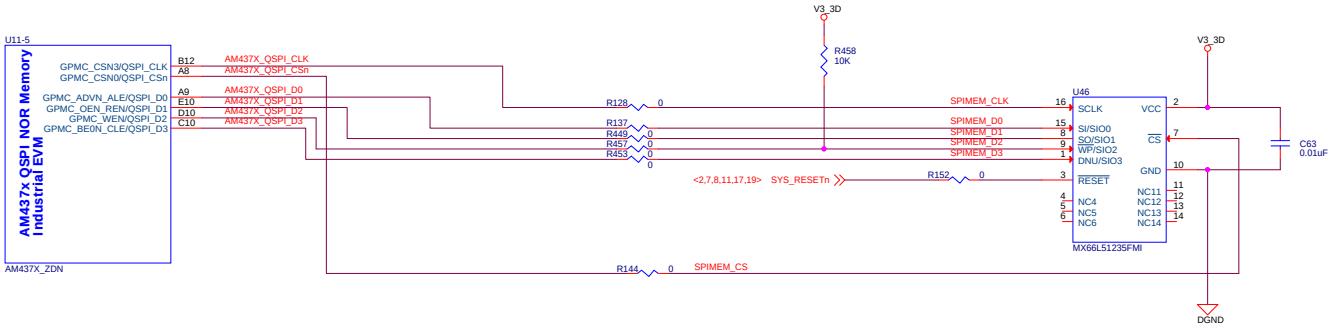

Catalog Processors

Texas Instruments, Inc.

Catalog Processors Business Unit
12500 TI Blvd
Dallas, TX 75243

Final

AM437x Industrial EVM

QSPI NOR Flash Memory

Size	Document Number	Modified By:	Rev
C	am437x_industrial_evm_3k0008.dsn	Paul Eaves	1.4A

Date: Tuesday, August 11, 2015 Sheet: 5 of 120

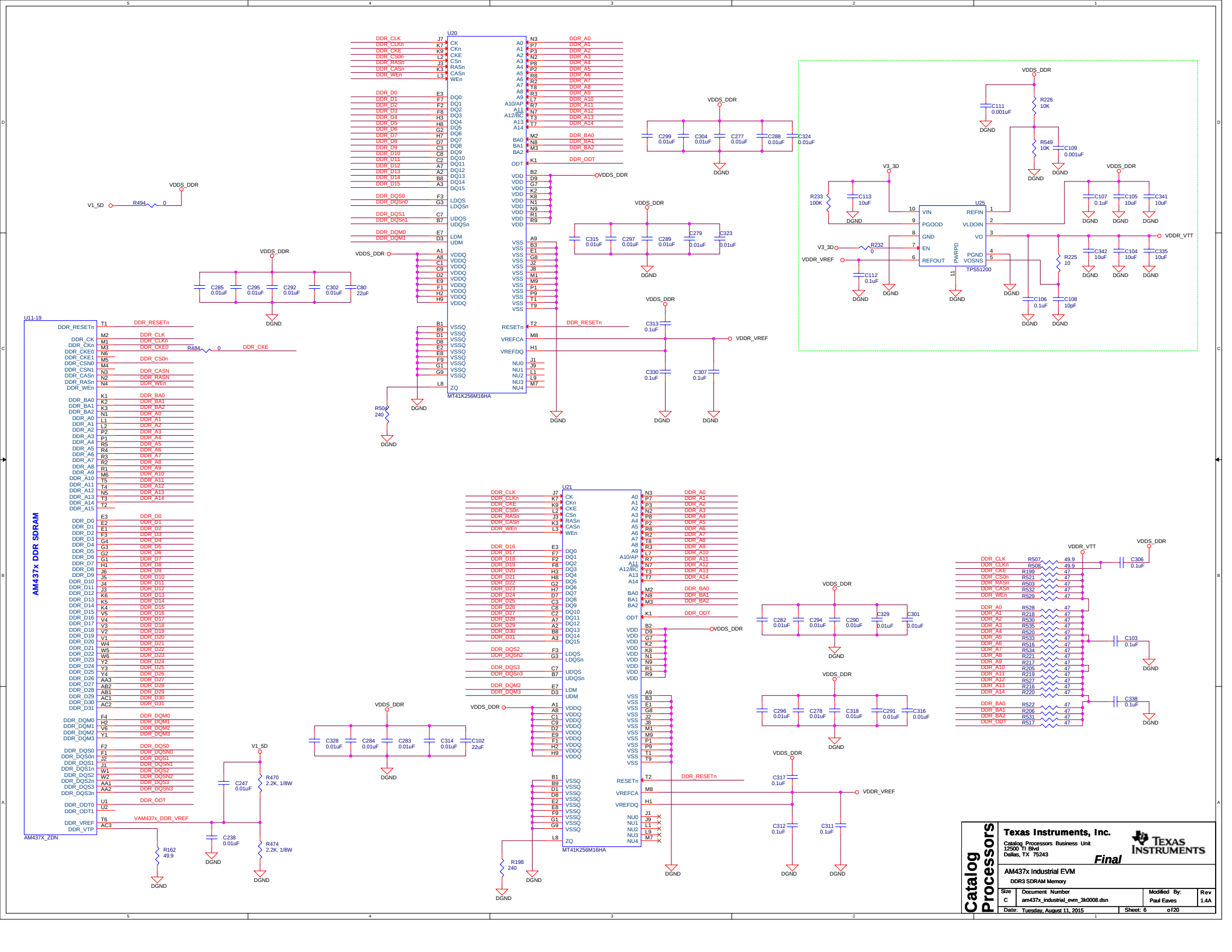

Catalog Processors

Texas Instruments, Inc.
Catalog Processors Business Unit
12500 TI Blvd
Dallas, TX 75243

TEXAS INSTRUMENTS

Final

AM437x Industrial EVM
DDR3 SDRAM Memory

Size	Document Number	Modified By:	Rev
C	am437x_industrial_evm_3k0008.dsn	Paul Eaves	1.4A

Date: Tuesday, August 11, 2015 | Sheet: 6 of 20

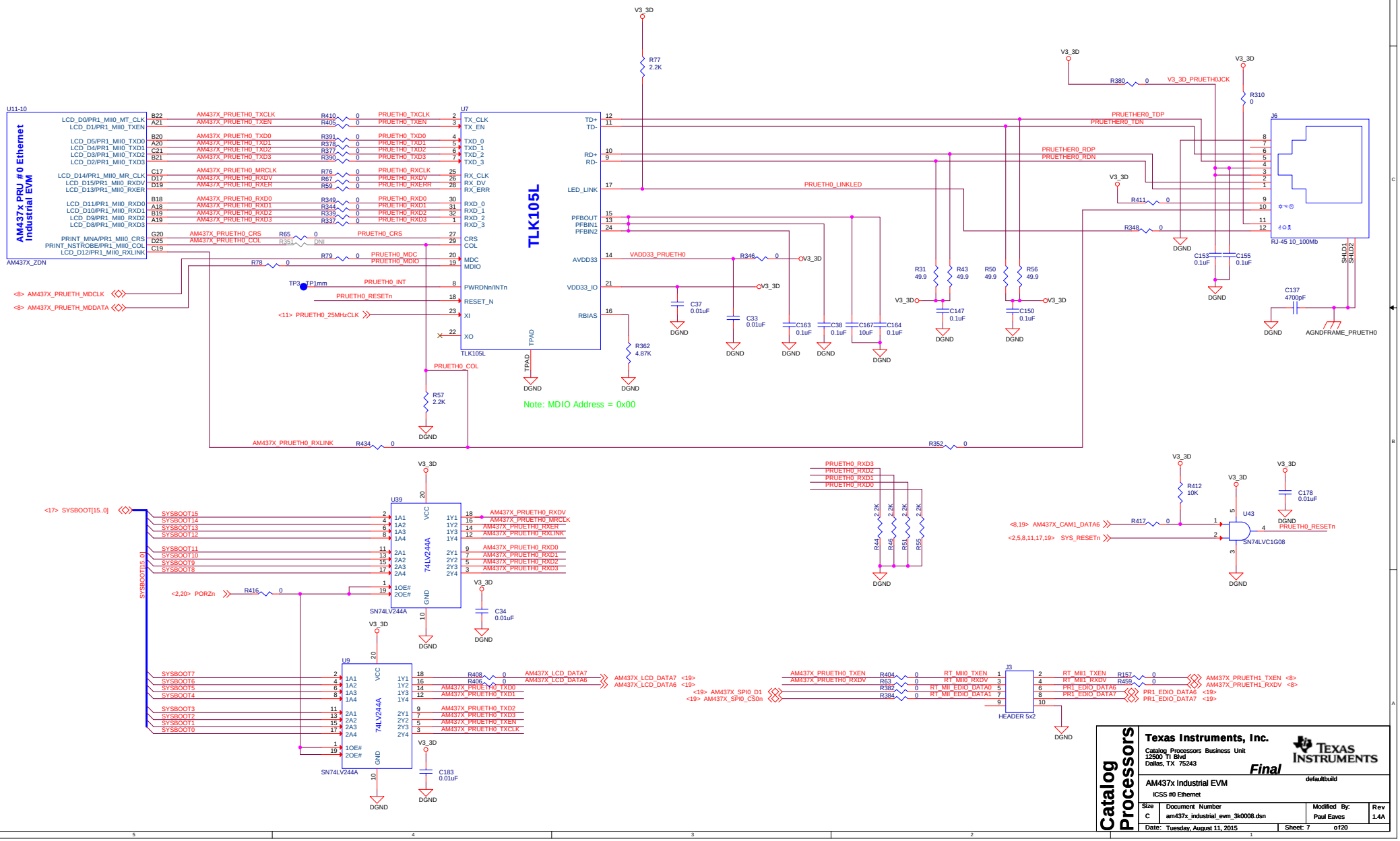
U11-10
AM437x PRU #0 Ethernet
Industrial EVM
AM437X_ZDN
LCD_D0/PR1_MII0_MT_CLK
LCD_D1/PR1_MII0_TXEN
LCD_D5/PR1_MII0_TXD0
LCD_D4/PR1_MII0_TXD1
LCD_D3/PR1_MII0_TXD2
LCD_D2/PR1_MII0_TXD3
LCD_D14/PR1_MII0_MR_CLK
LCD_D15/PR1_MII0_RXDV
LCD_D13/PR1_MII0_RXER
LCD_D11/PR1_MII0_RXD0
LCD_D10/PR1_MII0_RXD1
LCD_D9/PR1_MII0_RXD2
LCD_D8/PR1_MII0_RXD3
PRINT_MNA/PR1_MII0_CRS
PRINT_NSTROBE/PR1_MII0_COL
LCD_D12/PR1_MII0_RXLINK
AM437X_PRUETH0_TXCLK
AM437X_PRUETH0_TXEN
AM437X_PRUETH0_TXD0
AM437X_PRUETH0_TXD1
AM437X_PRUETH0_TXD2
AM437X_PRUETH0_TXD3
AM437X_PRUETH0_MRCLK
AM437X_PRUETH0_RXDV
AM437X_PRUETH0_RXER
AM437X_PRUETH0_RXD0
AM437X_PRUETH0_RXD1
AM437X_PRUETH0_RXD2
AM437X_PRUETH0_RXD3
AM437X_PRUETH0_CRS
AM437X_PRUETH0_COL
PRUETH0_TXCLK
PRUETH0_TXEN
PRUETH0_TXD0
PRUETH0_TXD1
PRUETH0_TXD2
PRUETH0_TXD3
PRUETH0_RXCLK
PRUETH0_RXDV
PRUETH0_RXERR
PRUETH0_RXD0
PRUETH0_RXD1
PRUETH0_RXD2
PRUETH0_RXD3
PRUETH0_CRS
PRUETH0_COL
PRUETH0_MDC
PRUETH0_MDIO
PRUETH0_INT
PRUETH0_RESETn
PRUETH0_25MHzCLK
PRUETH0_RXLINK
<8> AM437X_PRUETH_MDCLK
<8> AM437X_PRUETH_MDDATA
U7
TLK105L
TX_CLK
TX_EN
TXD_0
TXD_1
TXD_2
TXD_3
RX_CLK
RX_DV
RX_ERR
RXD_0
RXD_1
RXD_2
RXD_3
CRS
COL
MDC
MDIO
PWRDNn/INTn
RESET_N
XI
XO
TPAD
TD+
TD-
RD+
RD-
LED_LINK
PFBOUT
PFBIN1
PFBIN2
AVDD33
VDD33_IO
RBIAS
VADD33_PRUETH0
PRUETH0_LINKLED
V3_3D
DGND
R77 2.2K
R57 2.2K
R78 0
R362 4.87K
R346 0
R348 0
R352 0
R380 0
R411 0
R434 0
R310 0
R31 49.9
R43 49.9
R50 49.9
R56 49.9
C37 0.01uF
C33 0.01uF
C163 0.1uF
C38 0.1uF
C167 10uF
C164 0.1uF
C147 0.1uF
C150 0.1uF
C153 0.1uF
C155 0.1uF
C137 4700pF
J6
RJ-45 10_100Mb
SHLD1
SHLD2
AGNDFRAME_PRUETH0
PRUETHER0_TDP
PRUETHER0_TDN
PRUETHER0_RDP
PRUETHER0_RDN
V3_3D_PRUETH0JCK
Note: MDIO Address = 0x00
U39
SN74LV244A
74LV244A
VCC
GND
1OE#
2OE#
1A1
1A2
1A3
1A4
2A1
2A2
2A3
2A4
1Y1
1Y2
1Y3
1Y4
2Y1
2Y2
2Y3
2Y4
<17> SYSBOOT[15..0]
SYSBOOT[15..0]
SYSBOOT15
SYSBOOT14
SYSBOOT13
SYSBOOT12
SYSBOOT11
SYSBOOT10
SYSBOOT9
SYSBOOT8
SYSBOOT7
SYSBOOT6
SYSBOOT5
SYSBOOT4
SYSBOOT3
SYSBOOT2
SYSBOOT1
SYSBOOT0
<2,20> PORZn
R416 0
C34 0.01uF
C183 0.01uF
U9
AM437X_PRUETH0_RXDV
AM437X_PRUETH0_MRCLK
AM437X_PRUETH0_RXER
AM437X_PRUETH0_RXLINK
AM437X_PRUETH0_RXD0
AM437X_PRUETH0_RXD1
AM437X_PRUETH0_RXD2
AM437X_PRUETH0_RXD3
AM437X_PRUETH0_TXD0
AM437X_PRUETH0_TXD1
AM437X_PRUETH0_TXD2
AM437X_PRUETH0_TXEN
AM437X_PRUETH0_TXCLK
R408 0
R406 0
AM437X_LCD_DATA7
AM437X_LCD_DATA6
<19> AM437X_LCD_DATA7
<19> AM437X_LCD_DATA6
<19> AM437X_SPI0_D1
<19> AM437X_SPI0_CS0n
R44 2.2K
R46 2.2K
R51 2.2K
R55 2.2K
U43
SN74LVC1G08
<8,19> AM437X_CAM1_DATA6
<2,5,8,11,17,19> SYS_RESETn
R412 10K
R417 0
C178 0.01uF
J3
HEADER 5x2
AM437X_PRUETH0_TXEN
AM437X_PRUETH0_RXDV
R404 0
R63 0
R382 0
R384 0
RT_MII0_TXEN
RT_MII0_RXDV
RT_MII_EDIO_DATA0
RT_MII_EDIO_DATA1
RT_MII1_TXEN
RT_MII1_RXDV
PR1_EDIO_DATA6
PR1_EDIO_DATA7
R157 0
R459 0
AM437X_PRUETH1_TXEN <8>
AM437X_PRUETH1_RXDV <8>
PR1_EDIO_DATA6 <19>
PR1_EDIO_DATA7 <19>
Catalog Processors
Texas Instruments, Inc.
Catalog Processors Business Unit
12500 TI Blvd
Dallas, TX 75243
Final
defaultbuild
AM437x Industrial EVM
ICSS #0 Ethernet
Size C
Document Number am437x_industrial_evm_3k0008.dsn
Modified By: Paul Eaves
Rev 1.4A
Date: Tuesday, August 11, 2015
Sheet: 7 of 20

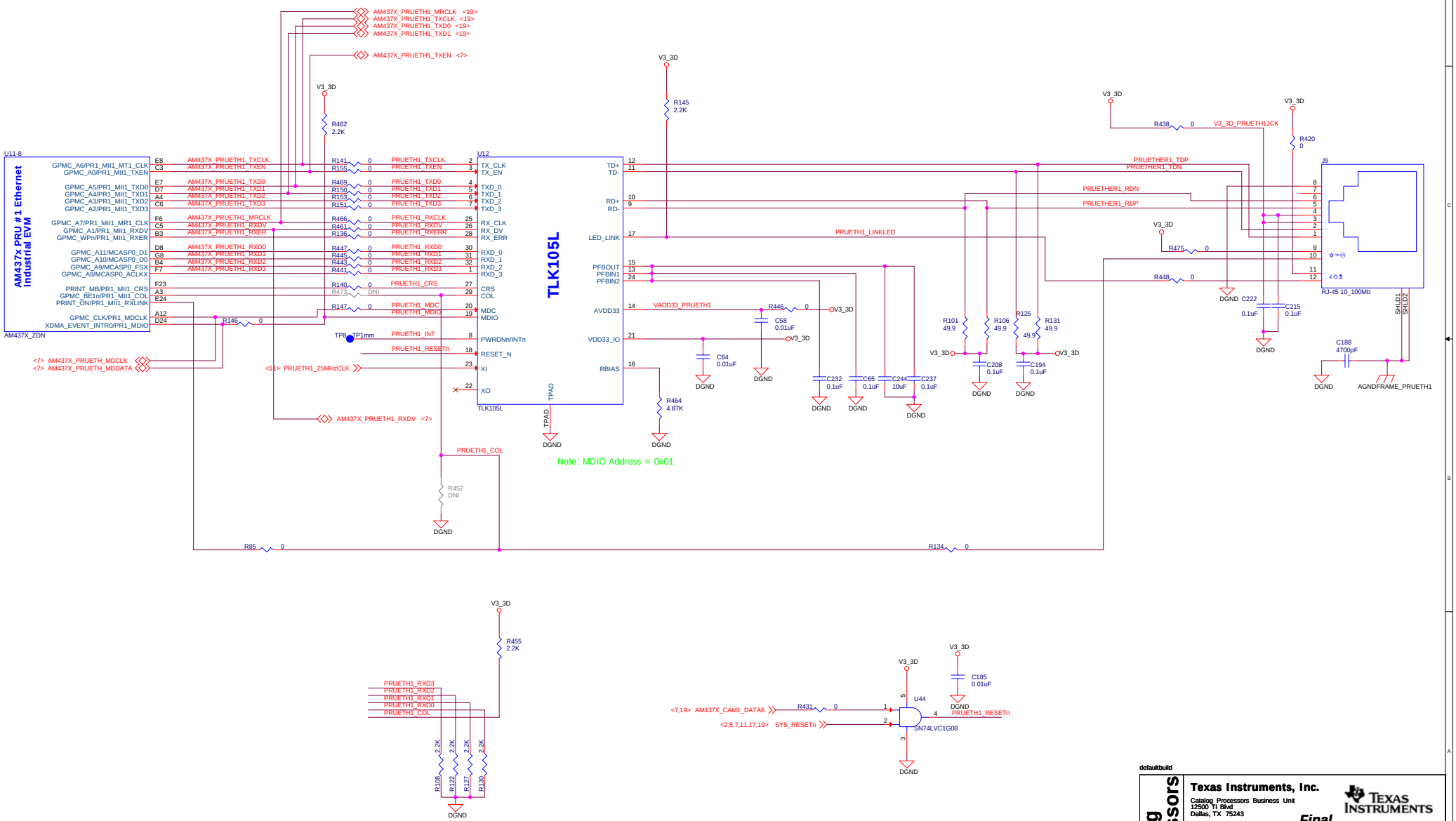

defaultbuild

Catalog Processors

Texas Instruments, Inc.
Catalog Processors Business Unit
12500 TI Blvd
Dallas, TX 75243

Final

AM437x Industrial EVM
ICSS #1 Ethernet

Size	Document Number	Modified By:	Rev
C	am437x_industrial_evm_3k0008.dsn	Paul Eaves	1.4A
Date: Tuesday, August 11, 2015		Sheet: 8 of 20	

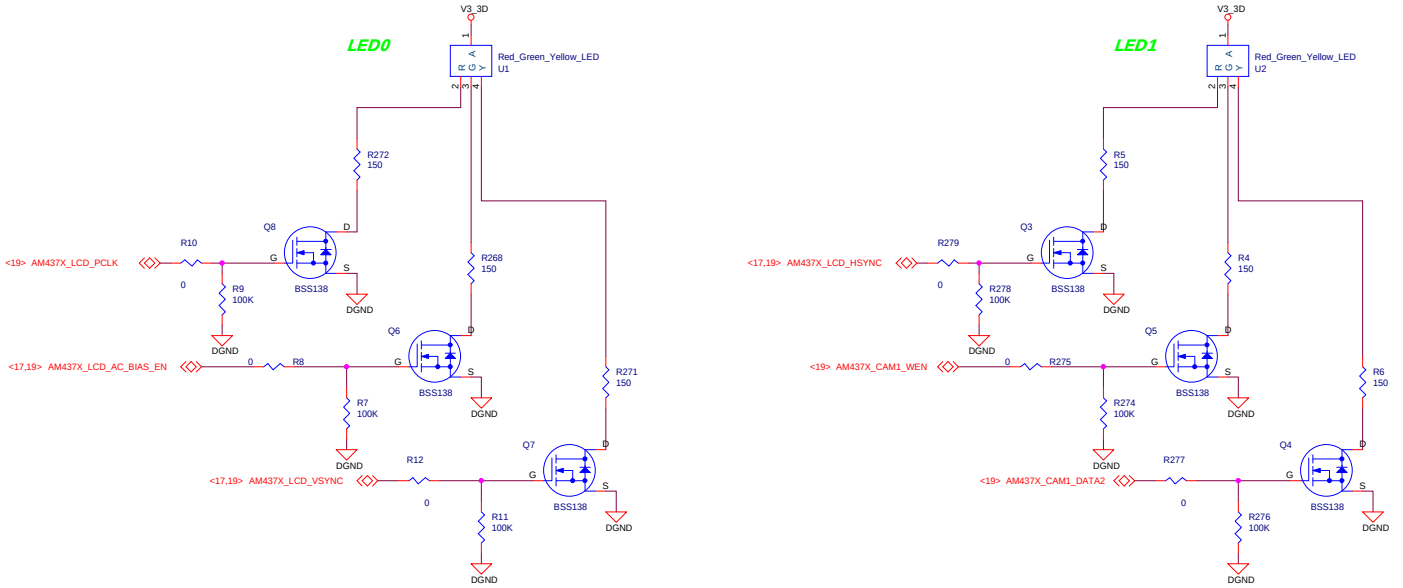

Catalog Processors

Texas Instruments, Inc.

Catalog Processors Business Unit
12500 TI Blvd
Dallas, TX 75243

Final

AM437x Industrial EVM

EtherCAT

Size	Document Number	Modified By:	Rev
C	am437x_industrial_evm_3k0008.dsn	Paul Eaves	1.4A

Date: Tuesday, August 11, 2015 Sheet: 9 of 120

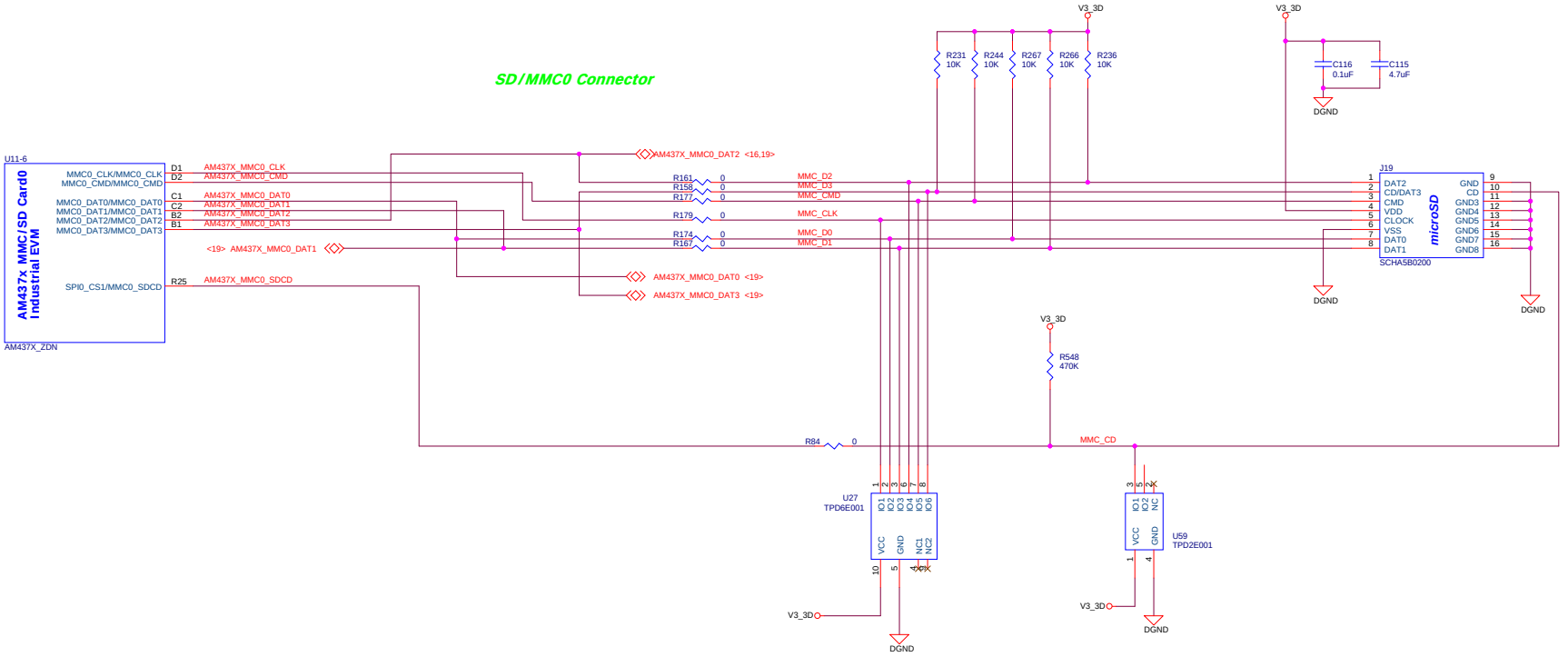

defaultbuild

Catalog Processors

Texas Instruments, Inc.

Catalog Processors Business Unit
12500 TI Blvd
Dallas, TX 75243

Final

AM437x Industrial EVM

SDMMC #0 Interface

Size	Document Number	Modified By:	Rev
C	am437x_industrial_evm_3k0008.dsn	Paul Eaves	1.4A

Date: Tuesday, August 11, 2015 Sheet: 10 of 120

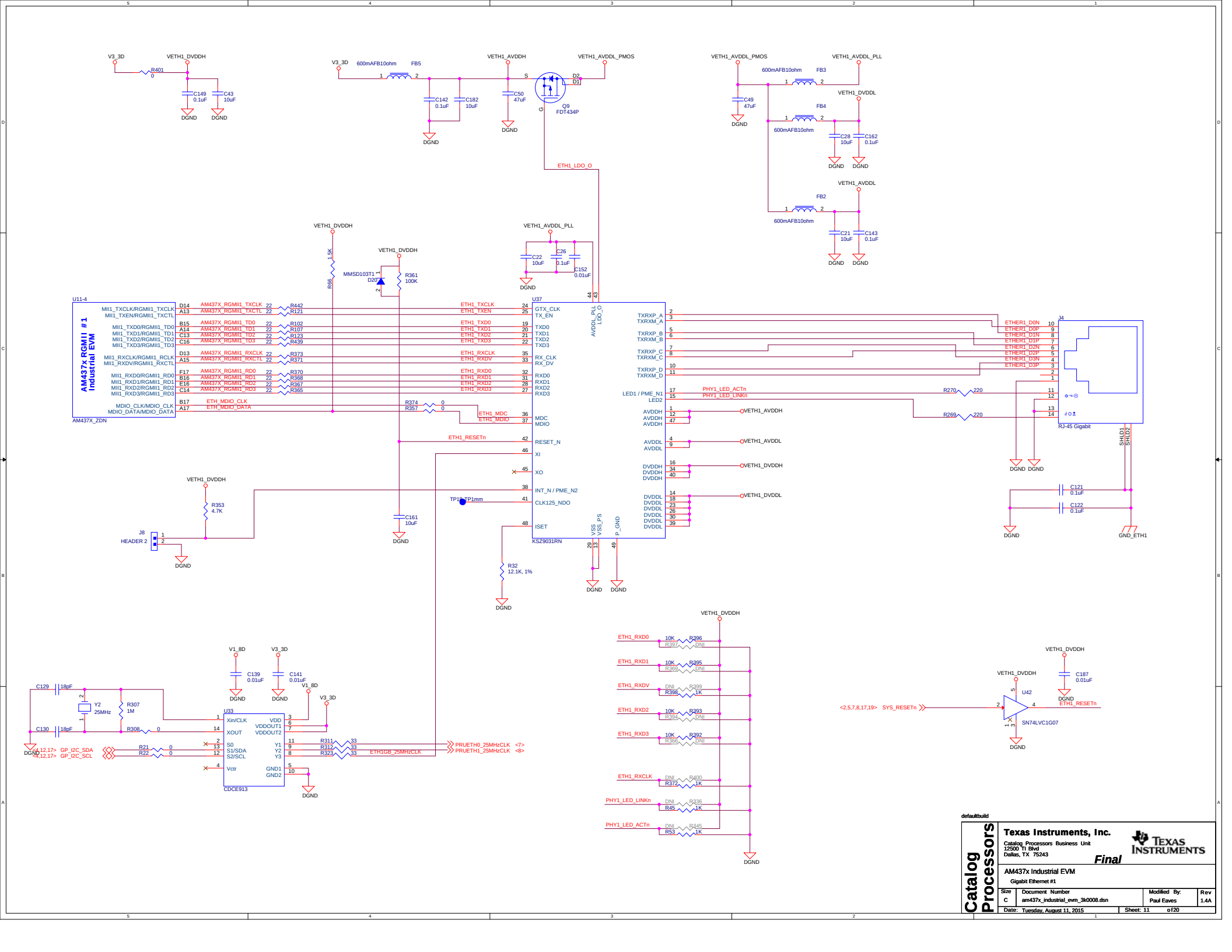

defaultbuild

Catalog Processors

Texas Instruments, Inc.

Catalog Processors Business Unit
12500 TI Blvd
Dallas, TX 75243

Final

AM437x Industrial EVM

Gigabit Ethernet #1

Size	Document Number	Modified By:	Rev
C	am437x_industrial_evm_3k0008.dsn	Paul Eaves	1.4A
Date: Tuesday, August 11, 2015		Sheet: 11 of 120	

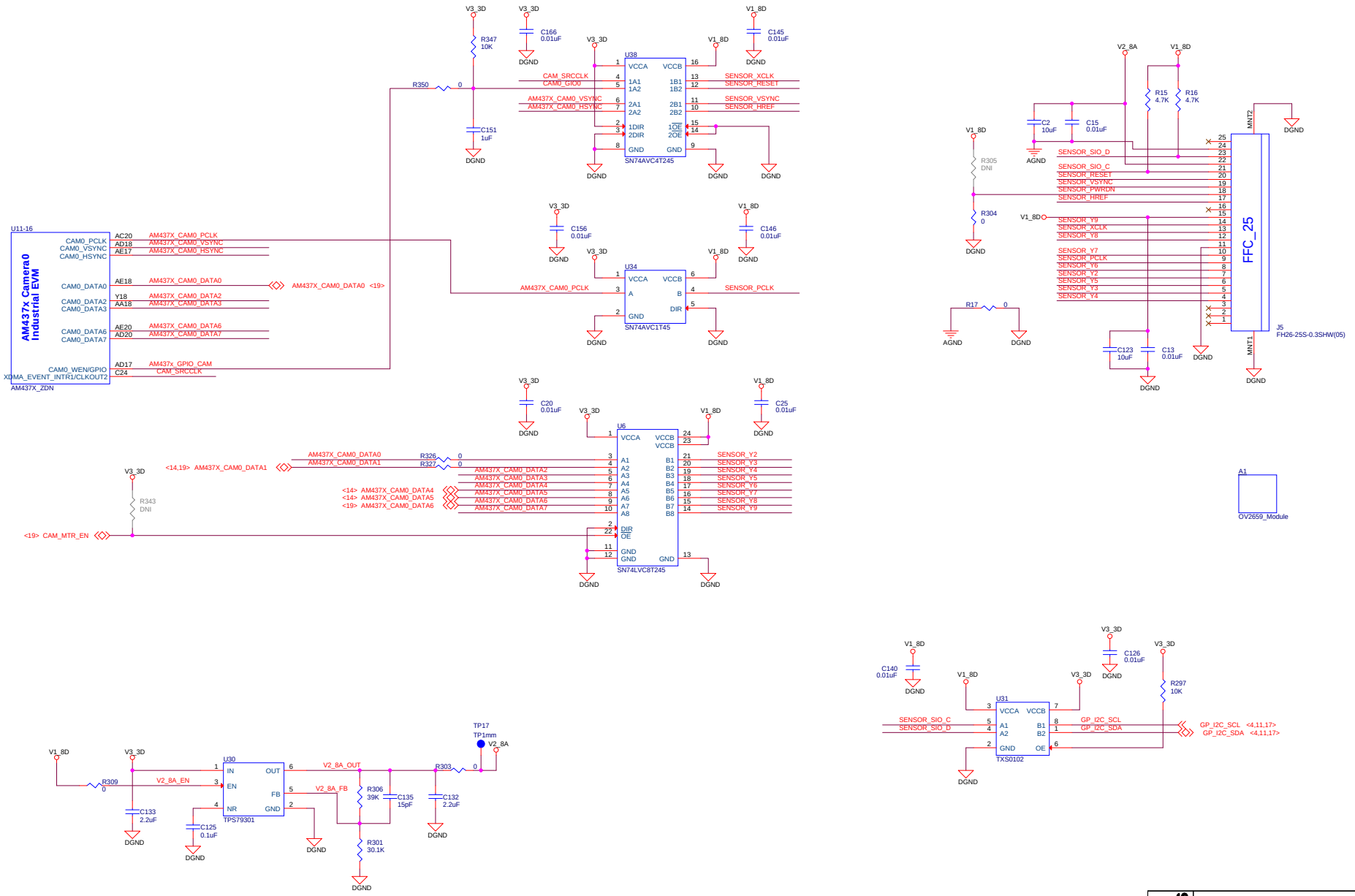

Catalog Processors	Texas Instruments, Inc. Catalog Processors Business Unit 12500 TI Blvd Dallas, TX 75243	Final	
	AM437x Industrial EVM Camera #0		
Size: C	Document Number: am437x_industrial_evm_3k0008.dsn	Modified By: Paul Eaves	Rev: 1.4A
Date: Tuesday, August 11, 2015	Sheet: 12 of 20		

Industrial INPUTS

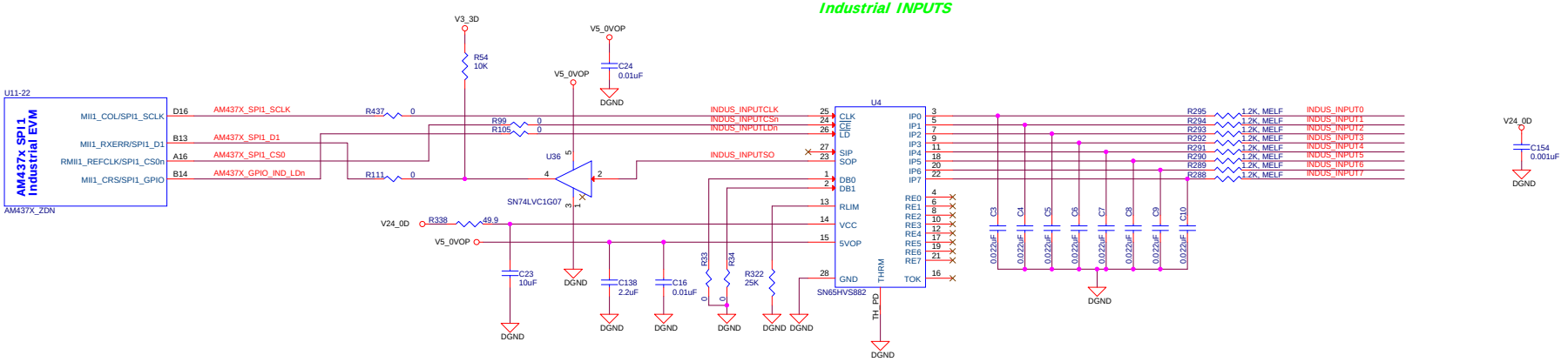

Digital OUTPUTS

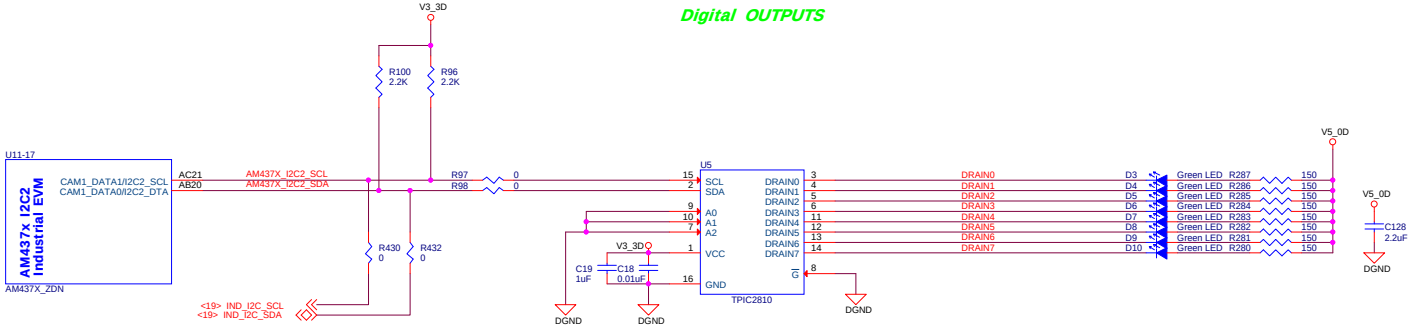

I/O Expansion Header

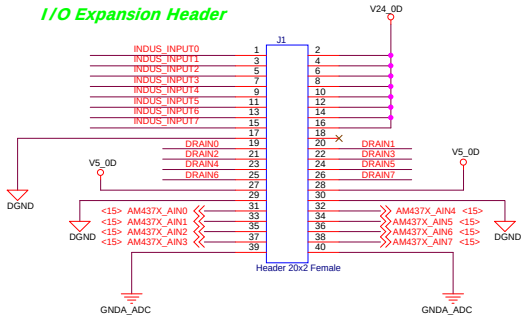

Catalog Processors

Texas Instruments, Inc.
Catalog Processors Business Unit
12500 TI Blvd
Dallas, TX 75243

Final

AM437x Industrial EVM
Industrial I/O

Size	Document Number	Modified By:	Rev
C	am437x_industrial_evm_3k0008.dsn	Paul Eaves	1.4A
Date: Tuesday, August 11, 2015		Sheet: 13 of 120	

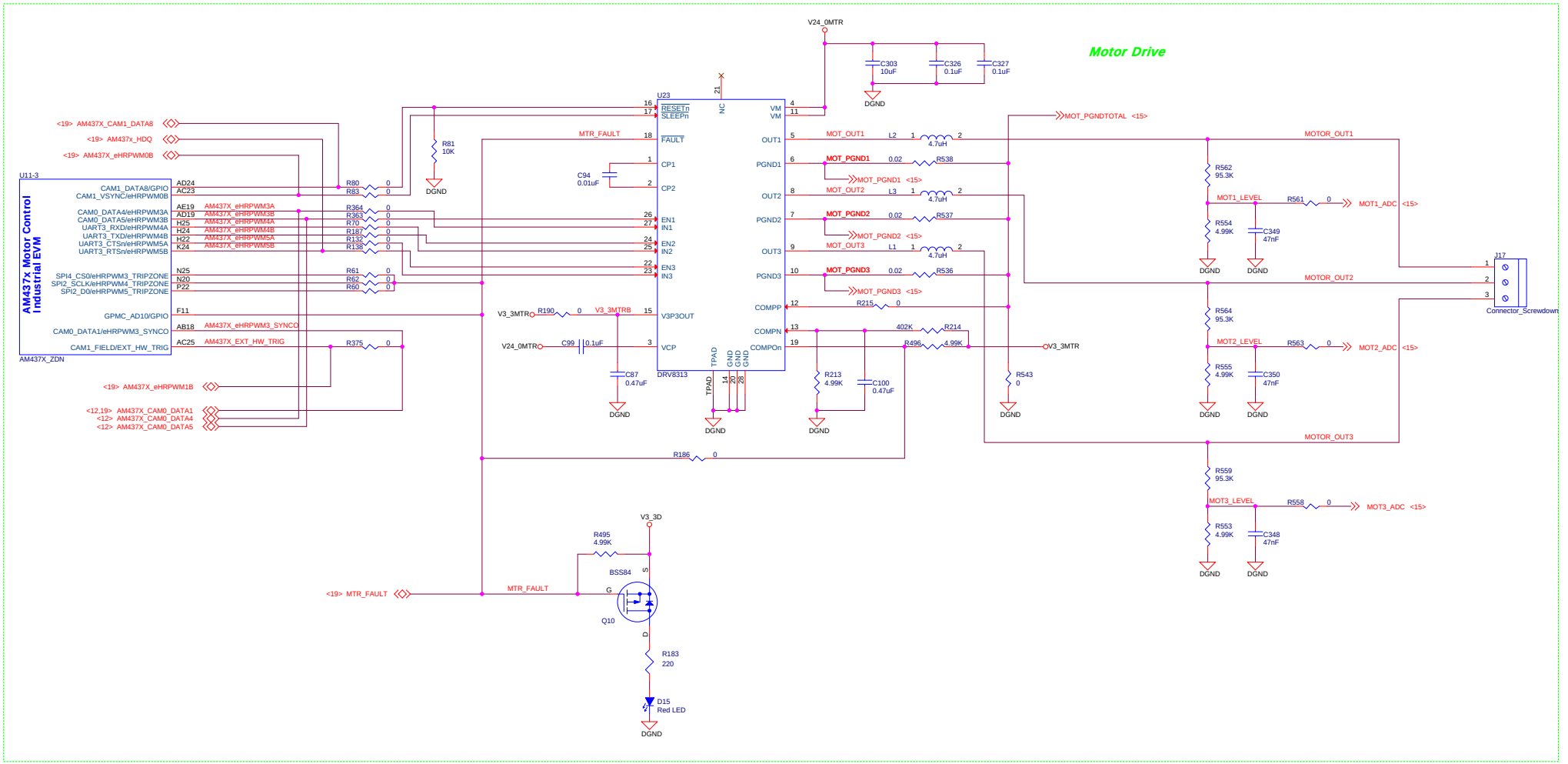
Motor Drive
AM437x Motor Control Industrial EVM
U11-3
AM437X_ZDN
U23
DRV8313
V24_0MTR
V3_3MTR
V3_3D
DGND
MTR_FAULT
MOT_PGNDTOTAL <15>
MOTOR_OUT1
MOTOR_OUT2
MOTOR_OUT3
MOT1_ADC <15>
MOT2_ADC <15>
MOT3_ADC <15>
Connector_Screwdown
Motor 24VDC Power Input
Connector_Screwdown
Texas Instruments, Inc.
Catalog Processors Business Unit
12500 TI Blvd
Dallas, TX 75243
Final
AM437x Industrial EVM
Motor Control
Size C
Document Number am437x_industrial_evm_3k0008.dsn
Modified By: Paul Eaves
Rev 1.4A
Date: Tuesday, August 11, 2015
Sheet: 14 of 20

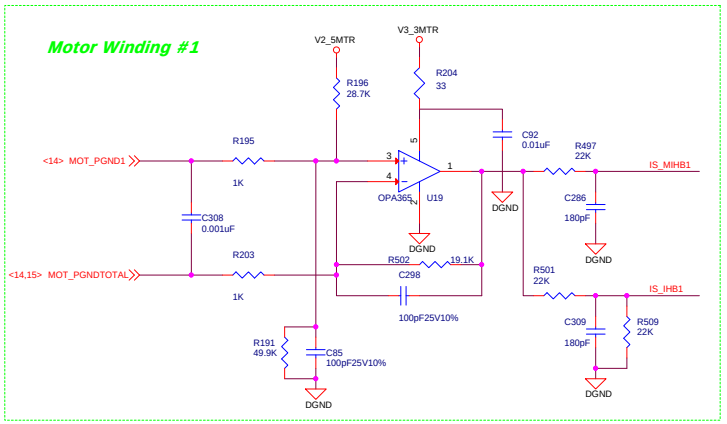

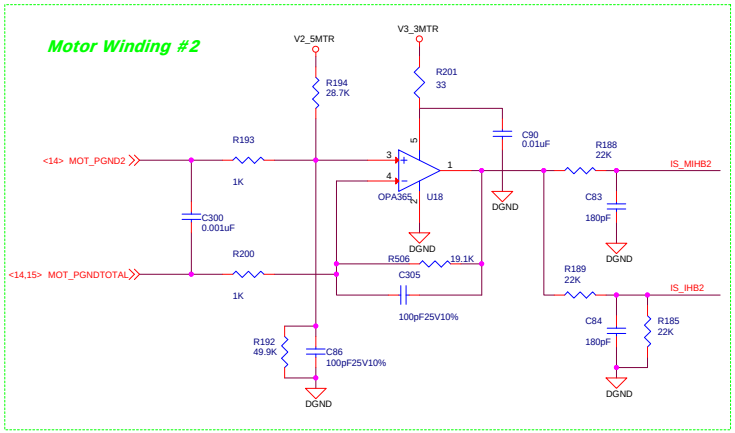

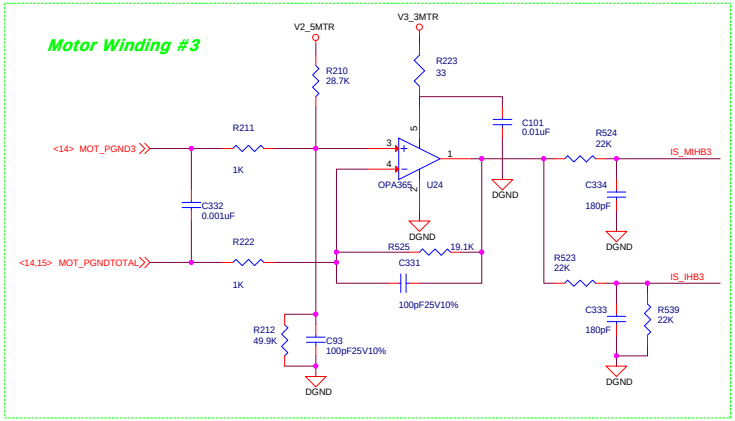

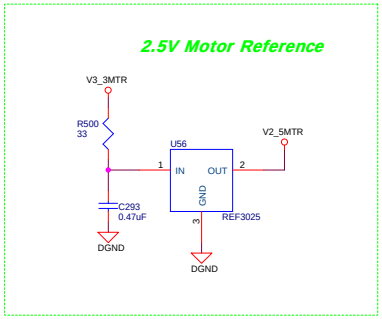

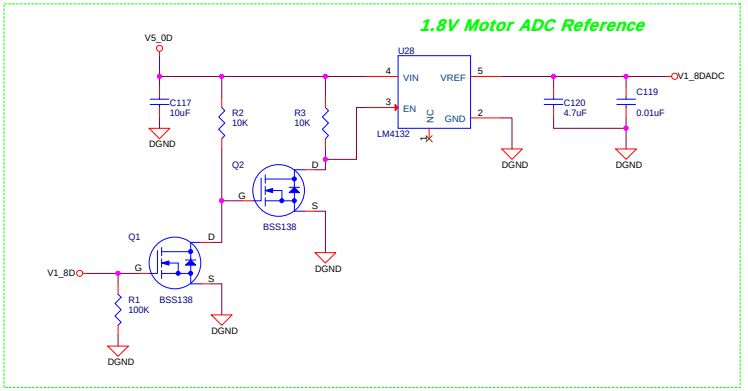

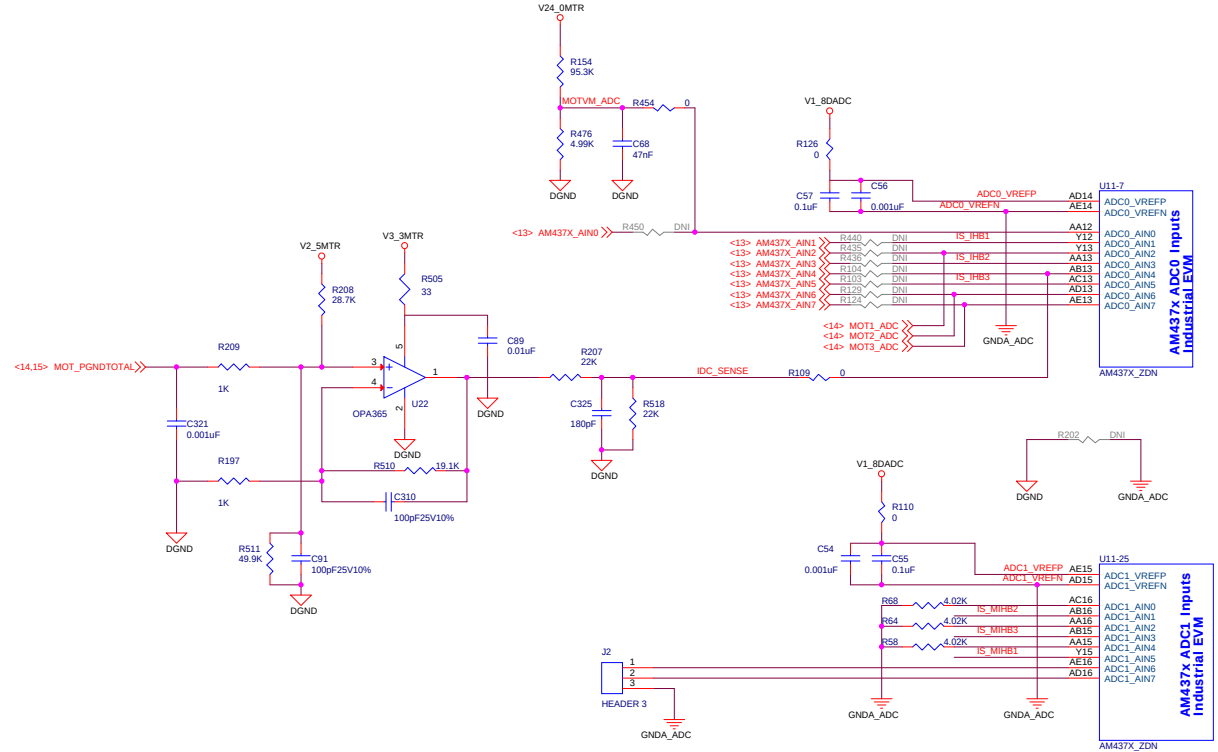

Catalog Processors

Texas Instruments, Inc.

Catalog Processors Business Unit
12500 TI Blvd
Dallas, TX 75243

Final

AM437x Industrial EVM

Motor Sense

Size	Document Number	Modified By:	Rev
C	am437x_industrial_evm_3k0008.dsn	Paul Eaves	1.4A
Date: Tuesday, August 11, 2015		Sheet: 15 of 120	

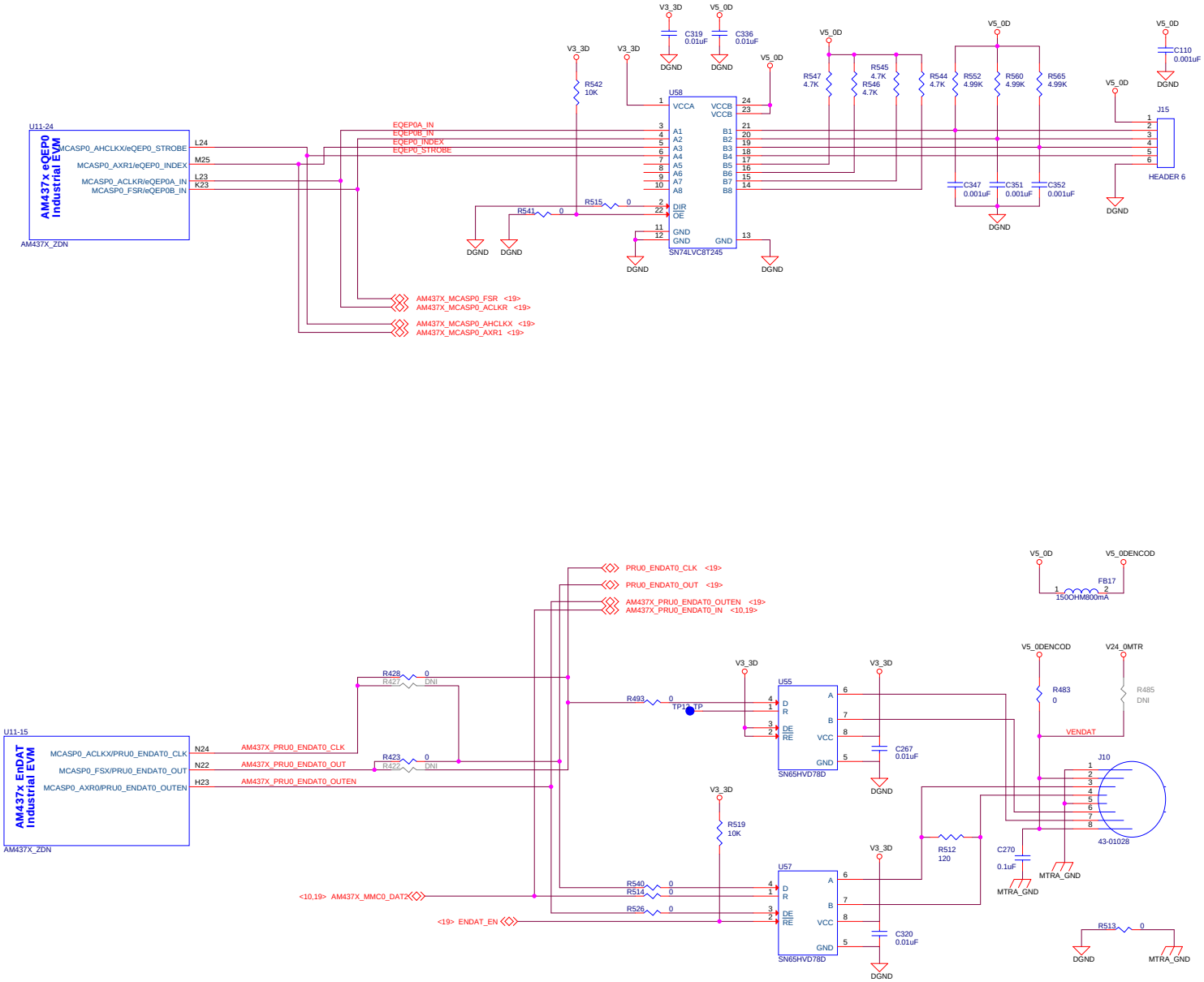

defaultbuild

Catalog Processors

Texas Instruments, Inc.

Catalog Processors Business Unit
12500 TI Blvd
Dallas, TX 75243

Final

AM437x Industrial EVM

Motor Encoders QEP and EnDAT

Size	Document Number	Modified By:	Rev
C	am437x_industrial_evm_3k0008.dsn	Paul Eaves	1.4A

Date: Tuesday, August 11, 2015 Sheet: 16 of 120

ID Memory

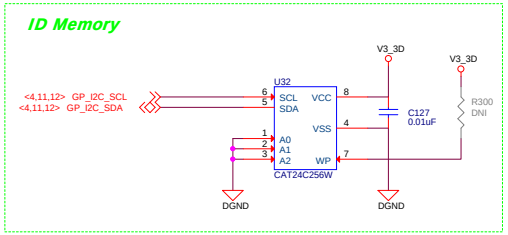

JTAG Pod Connector

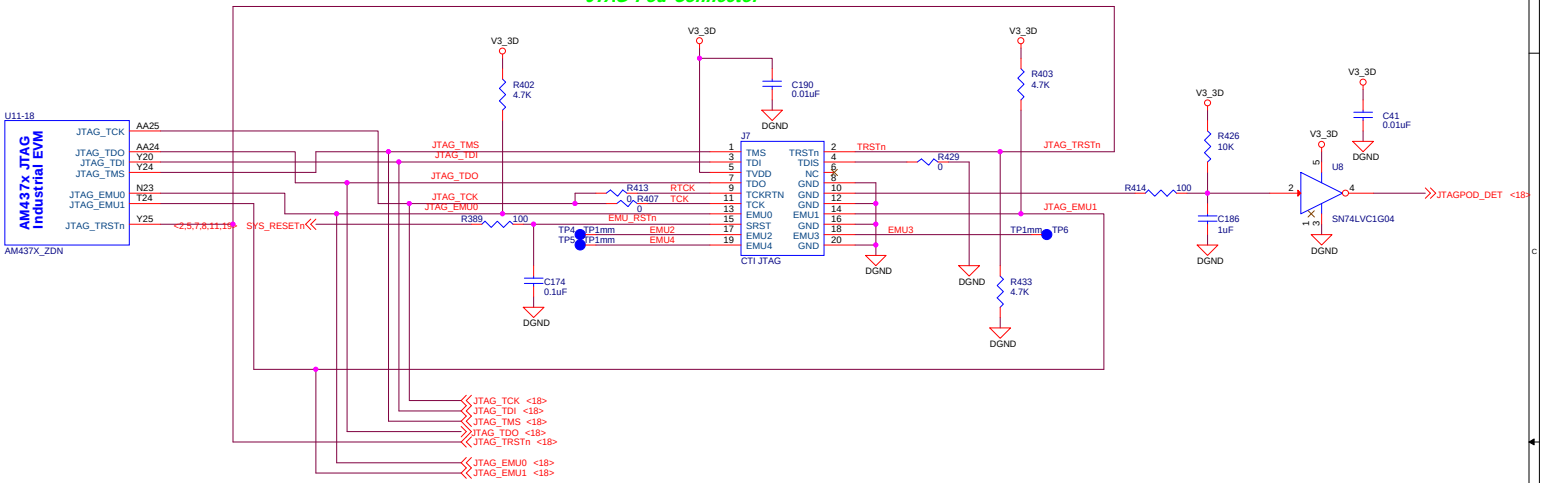

Boot Configuration

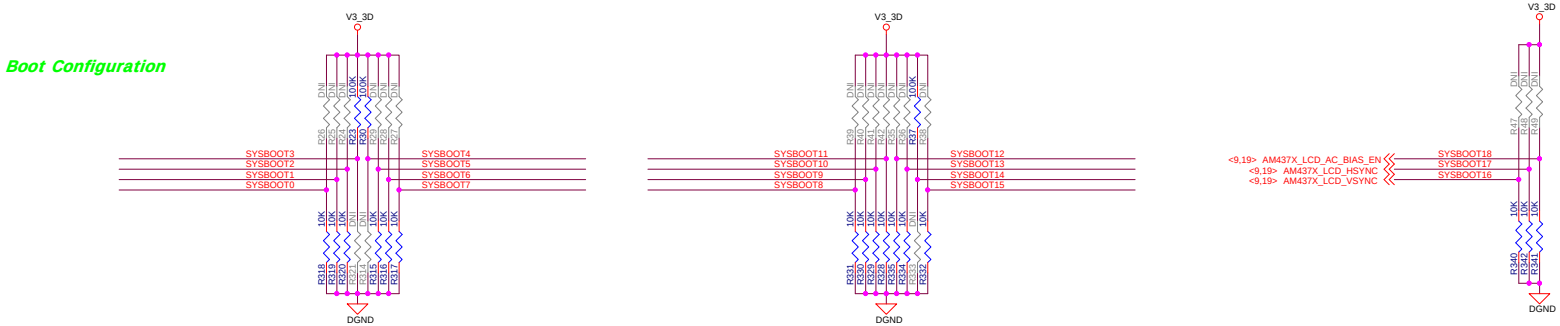

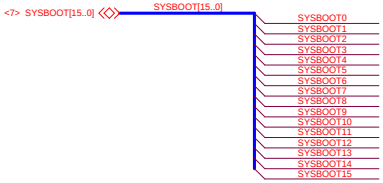

Catalog Processors

Texas Instruments, Inc.
Catalog Processors Business Unit
12500 TI Blvd
Dallas, TX 75243

Final

AM437x Industrial EVM
Debug/Configuration

Size	Document Number	Modified By:	Rev
C	am437x_industrial_evm_3k0008.dsn	Paul Eaves	1.4A
Date: Tuesday, August 11, 2015		Sheet: 17 of 20	

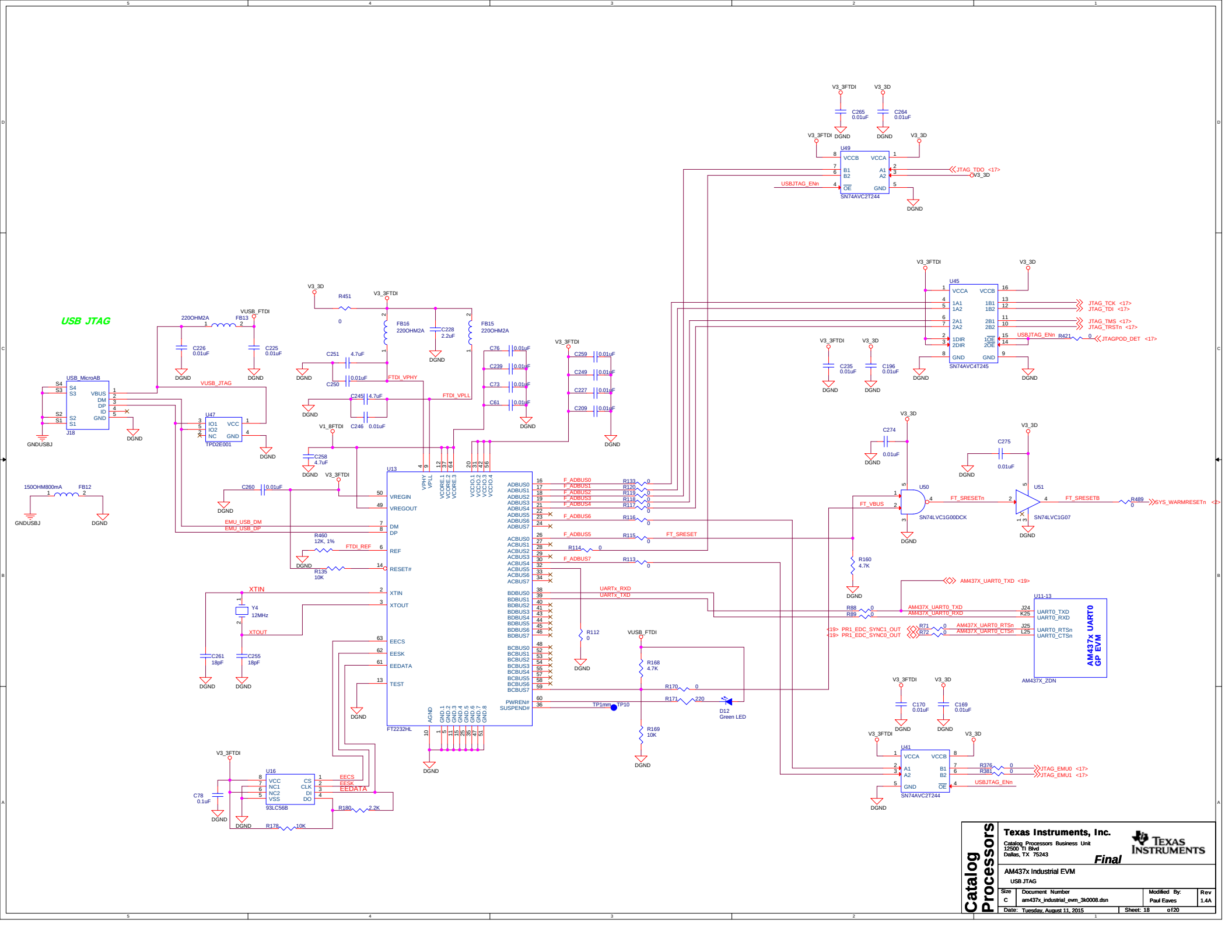
USB JTAG
USB_MicroAB
J18
GNDUSBJ
150OHM800mA
FB12
220OHM2A
FB13
VUSB_FTDI
VUSB_JTAG
U47
TPD2E001
U13
FT2232HL
VREGIN
VREGOUT
DM
DP
REF
RESET#
XTIN
XTOUT
EECS
EESK
EEDATA
TEST
FTDI_VPHY
FTDI_VPLL
FTDI_REF
EMU_USB_DM
EMU_USB_DP
Y4
12MHz
U16
93LC56B
U49
SN74AVC2T244
U45
SN74AVC4T245
U50
SN74LVC1G00DCK
U51
SN74LVC1G07
U11-13
AM437X UART0 GP EVM
AM437X_ZDN
U41
SN74AVC2T244
D12
Green LED
JTAG_TDO <17>
JTAG_TCK <17>
JTAG_TDI <17>
JTAG_TMS <17>
JTAG_TRSTn <17>
JTAGPOD_DET <17>
FT_VBUS
FT_SRESETn
FT_SRESETB
SYS_WARMRESETn <2>
AM437X_UART0_TXD <19>
AM437X_UART0_RXD
AM437X_UART0_RTSn
AM437X_UART0_CTSn
PR1_EDC_SYNC1_OUT
PR1_EDC_SYNC0_OUT
JTAG_EMU0 <17>
JTAG_EMU1 <17>
USBJTAG_ENn
DGND
V3_3FTDI
V3_3D
V1_8FTDI
VUSB_FTDI
Catalog Processors
Texas Instruments, Inc.
Catalog Processors Business Unit
12500 TI Blvd
Dallas, TX 75243
Final
AM437x Industrial EVM
USB JTAG
Size C
Document Number am437x_industrial_evm_3k0008.dsn
Modified By: Paul Eaves
Rev 1.4A
Date: Tuesday, August 11, 2015
Sheet: 18 of 20

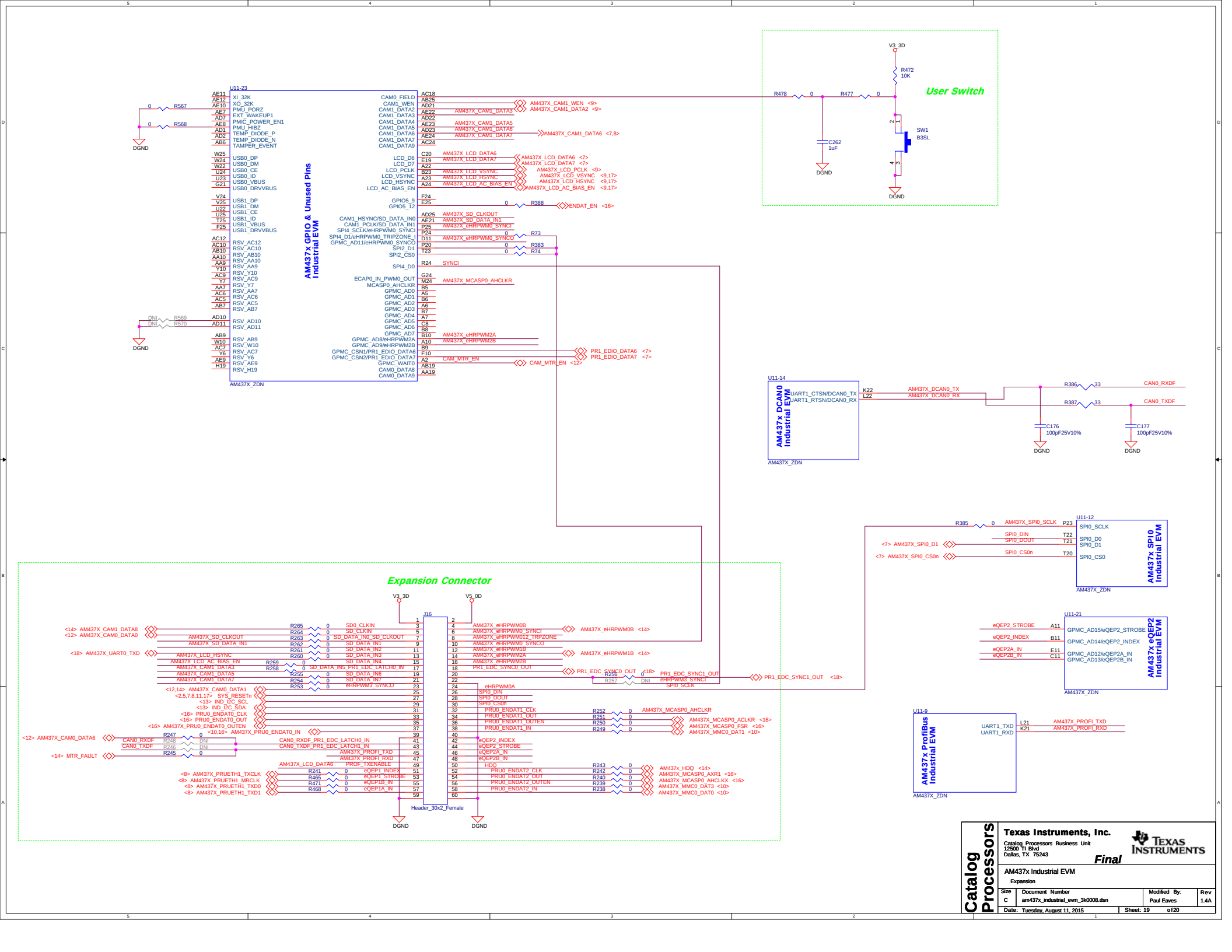
User Switch
Expansion Connector
AM437x GPIO & Unused Pins Industrial EVM
AM437x DCAN0 Industrial EVM
AM437x SPI0 Industrial EVM
AM437x eQEP2 Industrial EVM
AM437x ProfiBus Industrial EVM
Header_30x2_Female
Texas Instruments, Inc.
Catalog Processors Business Unit
12500 TI Blvd
Dallas, TX 75243
Final
AM437x Industrial EVM
Expansion
Catalog Processors
Size C
Document Number am437x_industrial_evm_3k0008.dsn
Modified By: Paul Eaves
Rev 1.4A
Date: Tuesday, August 11, 2015
Sheet: 19 of 120

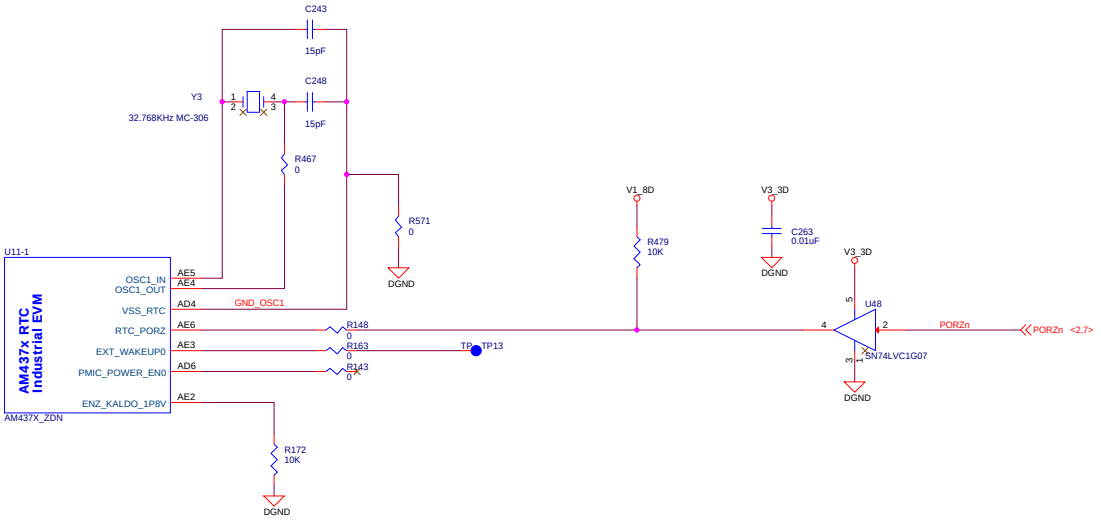

Catalog Processors

Texas Instruments, Inc.

Catalog Processors Business Unit
12500 TI Blvd
Dallas, TX 75243

Final

AM437x Industrial EVM

RTC

Size	Document Number	Modified By:	Rev
C	am437x_industrial_evm_3k0008.dsn	Paul Eaves	1.4A

Date: Tuesday, August 11, 2015 Sheet: 20 of 120