White Boards

Printer

Bench

Screen

CH402 Section B1T2 Seating Chart

Instructor

Remote Desktop:
WPWKDM331A
WPWKDM331B
WPWKDM331C
ETC.
Username: your email address
Password: Your network password

Outside Windows

D Mantooth	**C** Rodriguez

B Singh	**A** Smith

J Ebiuwhe	**I** Ferrying	**H** Howell	**G** Janat

F Lewis	**E** Macune

none	**N** Cox	**M** Davis

L	**K**

Q	**R**

P	**O**

Door

Updated 12/30/25

White Boards

Printer

Screen

Bench

CH402 Section D1S2 Seating Chart

Instructor

Remote Desktop:
WPWKDM331A
WPWKDM331B
WPWKDM331C
ETC.
Username: your email address
Password: Your network password

Outside Windows

D Littlehales	**C** Stokes

B Thomas	**A** Tringali

J Faherty	**I** Gilland	**H** Holmstrom	**G** Jensen

F Kennedy	**E** Leja

none	**N** Cox	**M** Badger

L Baisted	**K** Ellsworth

Door

Q	**R**

P	**O**

Updated 12/30/25

CH402 Section B1T2 Seating Chart

Updated 12/30/25

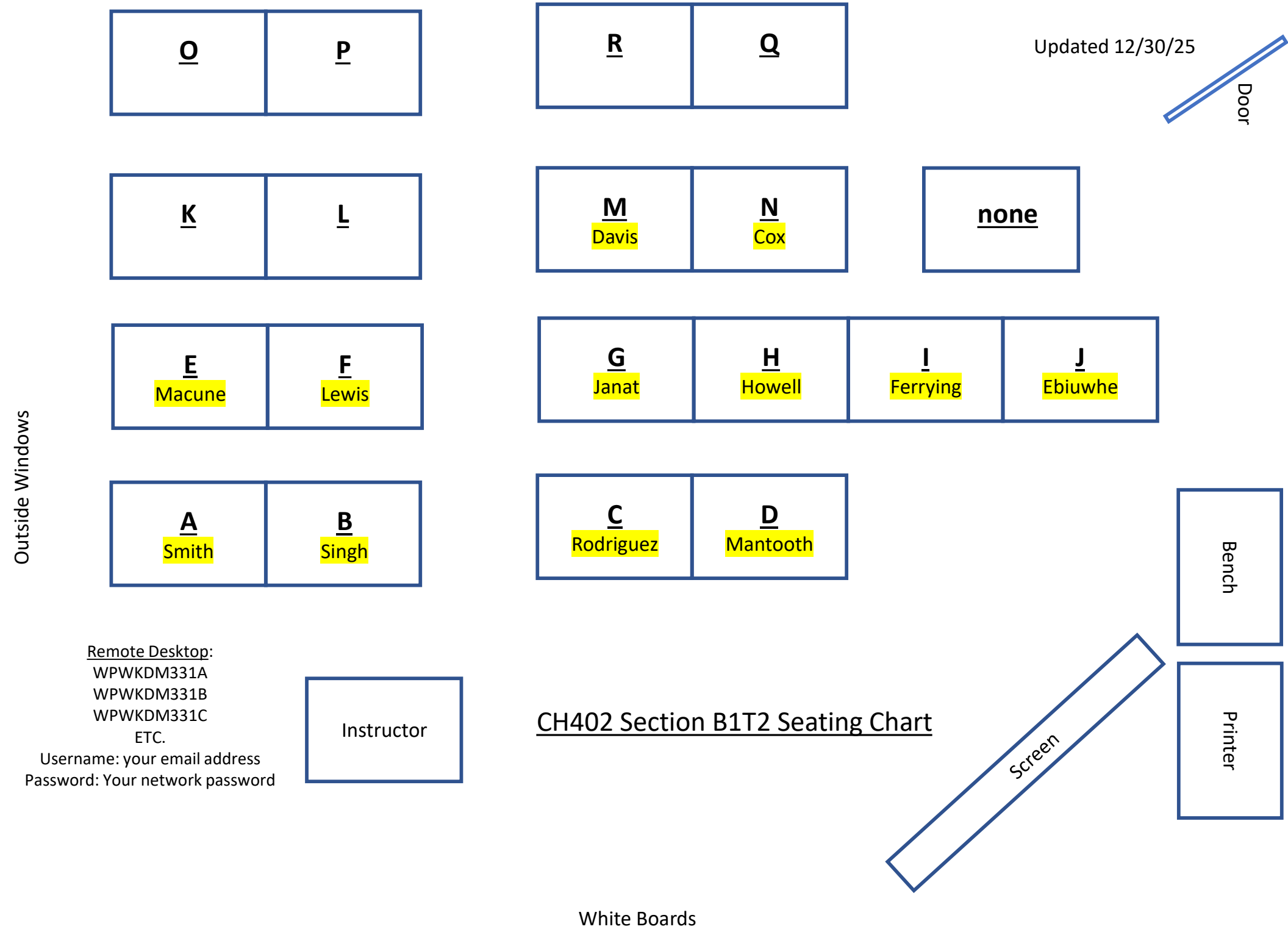

CH365 Section D1S2 Seating Chart

Updated 12/30/25

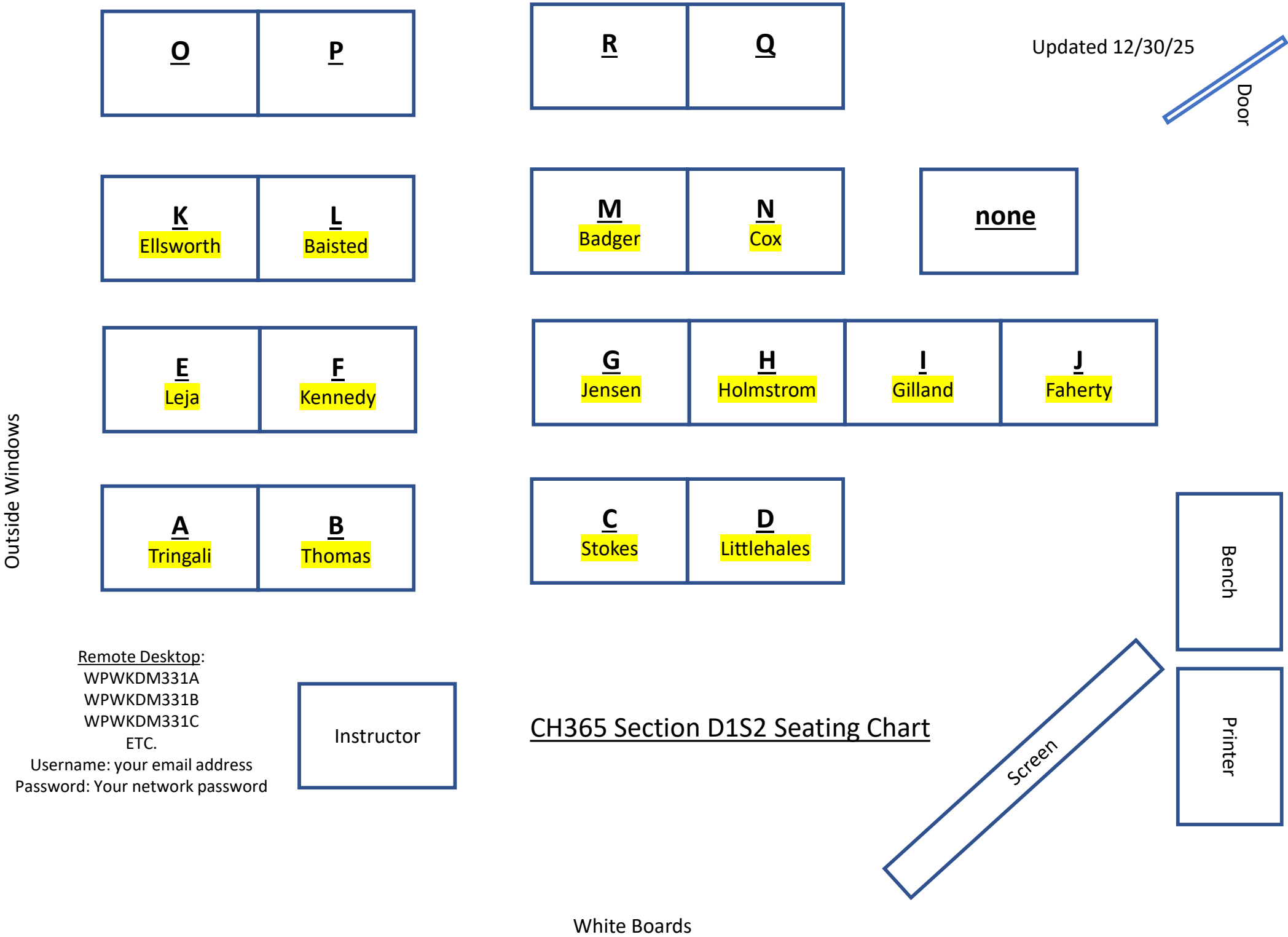

Re-arranged seating for capstone

White Boards

Printer

Screen

Bench

CH402 Section B1T2 Seating Chart

Instructor

Remote Desktop:
WPWKDM331A
WPWKDM331B
WPWKDM331C
ETC.
Username: your email address
Password: Your network password

Outside Windows

D

C
Lewis

Alaska North Slope

B
Davis

A
Janat

J

I
Mantooth

Kutubu

H
Howell

G
Ferrying

F
Lewis

E

none

N
Smith

M
Singh

Yoho

Q
Rodriguez

R

L
Macune

K
Cox

Unity Gold

P
Ebiuwhe

O

Door

Updated 3/11/26

White Boards

Printer

Screen

Bench

CH402 Section D1S2 Seating Chart

Instructor

Remote Desktop:
WPWKDM331A
WPWKDM331B
WPWKDM331C
ETC.
Username: your email address
Password: Your network password

Outside Windows

D Thomas | **C** Baisted

Saxi Batuque

B Badger | **A** Ellsworth

Hebron

J | **I** | **H** Faherty | **G**

F Gilland | **E**

none

N Littlehales | **M** Kennedy

Statfjord

L Stokes | **K** Jensen

Bakken

Q Holmstrom | **R**

P Leja | **O** Tringali

Door

Updated 3/11/26

CH402 Section B1T2 Seating Chart

Updated 12/30/25

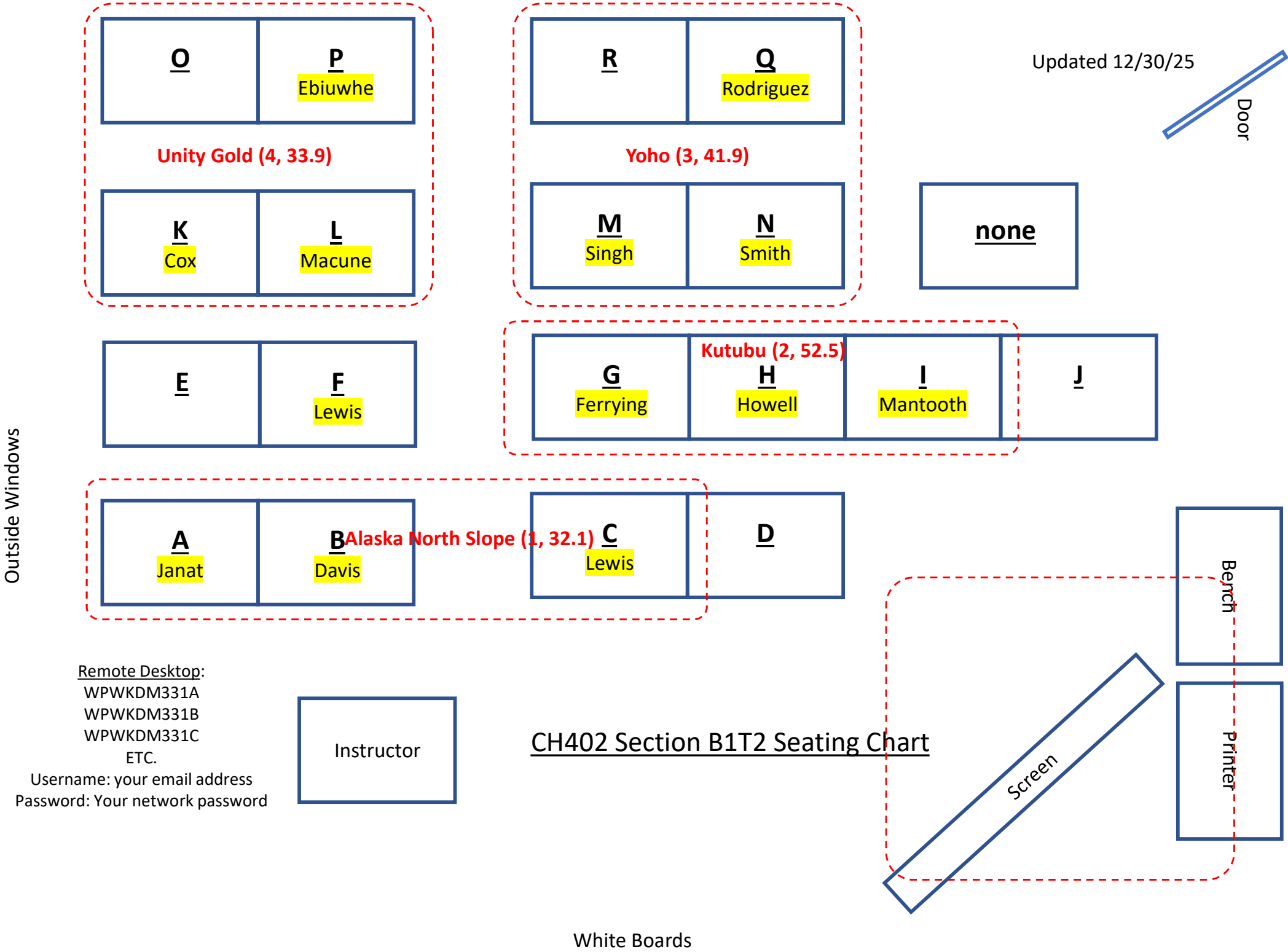

Remote Desktop:
WPWKDM331A
WPWKDM331B
WPWKDM331C
ETC.
Username: your email address
Password: Your network password

CH365 Section D1S2 Seating Chart

Updated 12/30/25

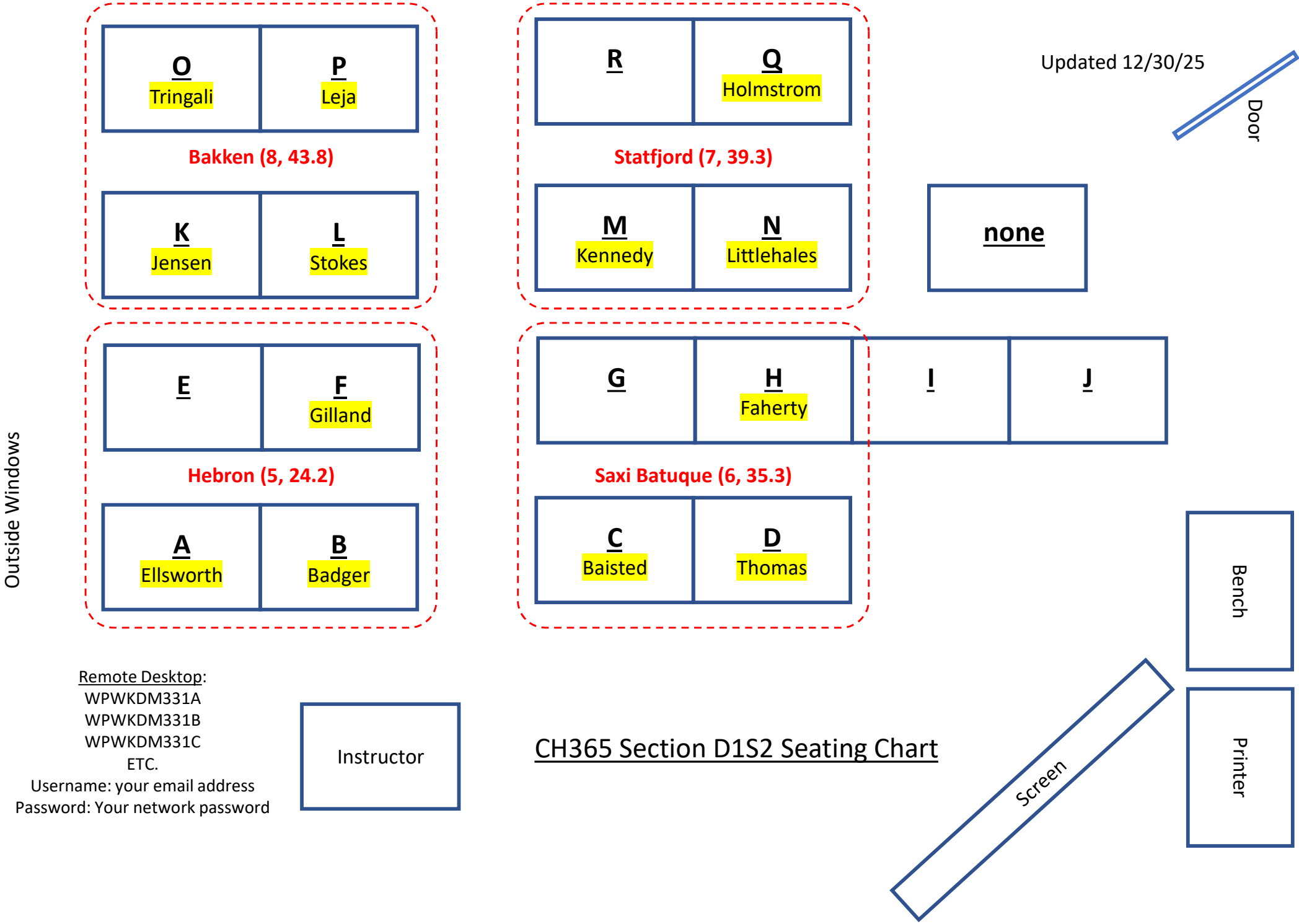

Remote Desktop:
WPWKDM331A
WPWKDM331B
WPWKDM331C
ETC.
Username: your email address
Password: Your network password