PARTS LIST				
ITEM	QTY	PART NUMBER	DESCRIPTION	MATERIAL
1	4	3PS01261A	Wall Section Panel 75.25in x 36inH - Assembly	
2	3	1LPC04971M	33.25in Brace	Aluminum 6061
3	2	1LPC04970M	77.75in Floor Panel	Aluminum 6061
4	2	3PS01260A	39.5in Rounded Contour Corner Cap	
5	42	0HWW02149	1/4" FLAT WASHER	Stainless Steel
6	24	0HWS02652	SCREW - 1/4"-20 X 1" RD HEAD- ROBERTSON DRIVE - MACHINE SCREW - SS	Generic
7	24	0HWW02160	1/4" LOCK WASHER	Stainless Steel
8	24	0HWN02231	1/4"-20 - HEX NUT - SS	Stainless Steel
9	6	1LPC04942M	Edge Support	Aluminum 6061
10	20	0HWS10025	SCREW - #14 X 1" SELF TAPPING SCREW - ROBERTSON -SS	Stainless Steel

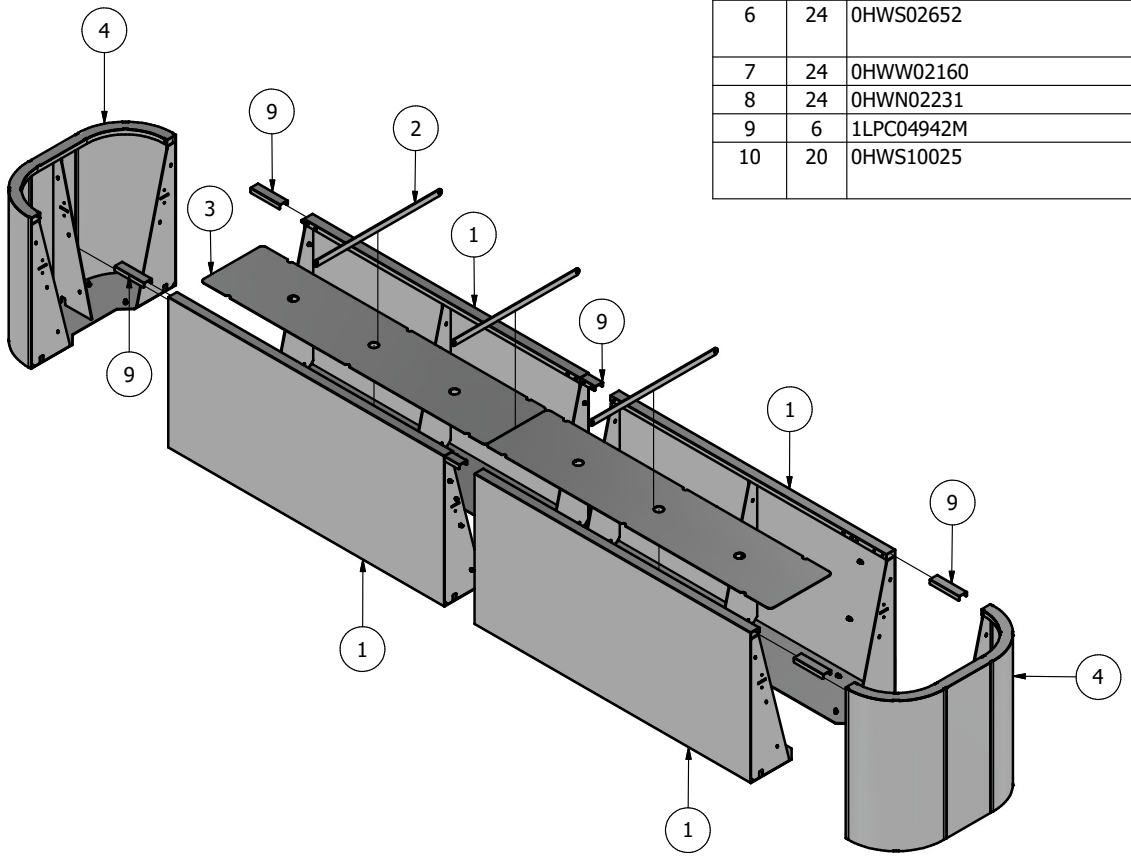

APPROVAL:	C. HAUSER	TOLERANCE: (UNLESS OTHERWISE SPECIFIED) FRACTIONS: ± 1/32" ANGLES: ± 0.5°	HAUSER INDUSTRIES INC.
DATE:	2026-03-18		330 WEBER STREET (N), WATERLOO N2J 3H6, ONTARIO, CANADA PHONE: (519) 747-1138 TOLL FREE: 1-800-268-7328 www.hauser.ca
AUTHOR:	AndreaC	UNITS: (UNLESS OTHERWISE SPECIFIED) INCHES	THIS DESIGN AND/OR DRAWING IS COPYRIGHT BEING THE PROPERTY OF **HAUSER INDUSTRIES INC.** AND SHALL NOT BE COPIED IN FULL OR IN PART NOR LENT OR REPRODUCED WITHOUT WRITTEN AUTHORIZATION FROM **HAUSER INDUSTRIES INC.**
ASSEMBLY DRAWING		MATERIAL:	
SIZE: B	Third angle	WEIGHT ESTIMATE: N/A	
		DRAWING NOT TO SCALE	PROJECT NAME: **CONTOUR PLANTERS**
REV:	SHEET: 2 OF 17	PART NUMBER: **PS-245-UC6K-178**	DESCRIPTION: **39.5"x178"-36" CONTOUR PLANTER**

G:\Acad\INVENTOR\Public Seating\Contour Planters\PS-245-UC6K-178 - ASSEMBLY DRAWING.idw