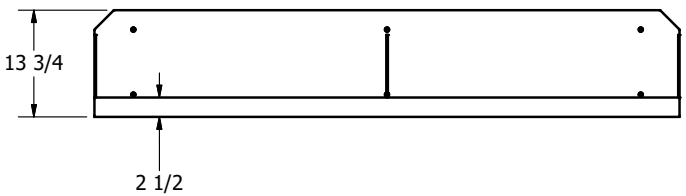

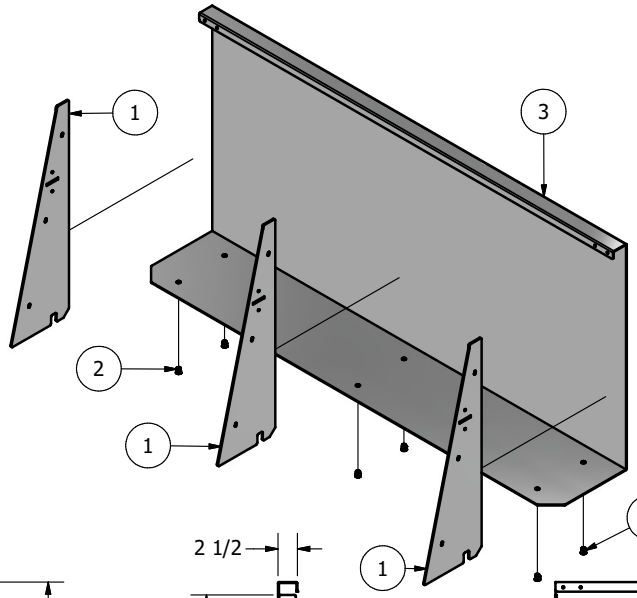

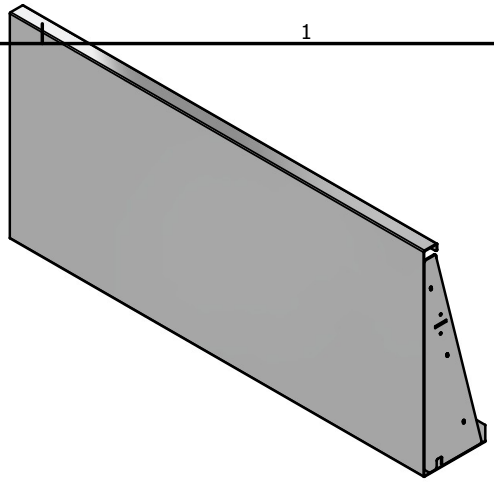

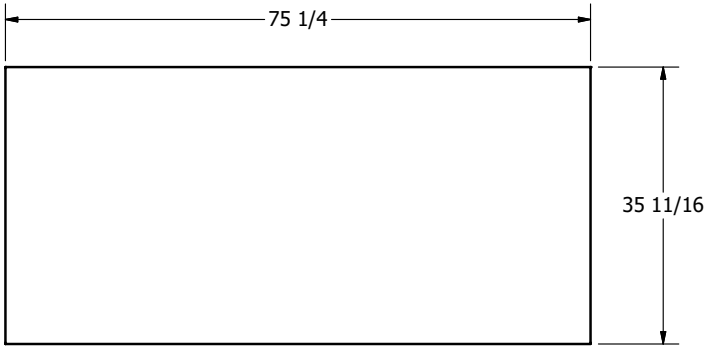

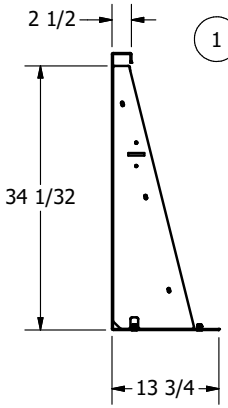

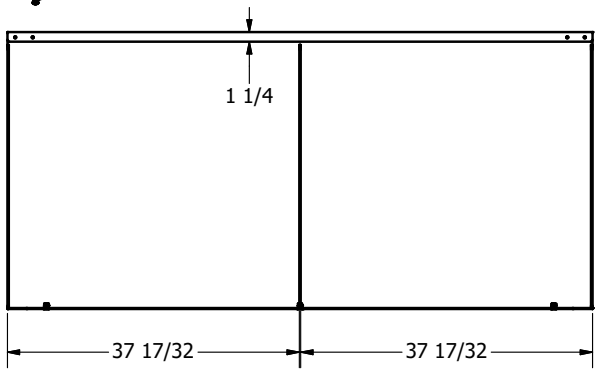

PARTS LIST

ITEM	QTY	PART NUMBER	DESCRIPTION	MATERIAL
1	3	1LPC04929M	Full Gusset - 36in	Aluminum 6061
2	6	0HWZ10012	5/16in x 0.72in TUBE TARRA (	Steel, Galvanized
3	1	1LPC04969M	Wall Section Panel 75.25in x 36inH	Aluminum 6061

APPROVAL:	C. HAUSER	TOLERANCE: (UNLESS OTHERWISE SPECIFIED) FRACTIONS: ± 1/32" ANGLES: ± 0.5°	HAUSER™ INDUSTRIES INC.
DATE:	2026-03-18		330 WEBER STREET (N), WATERLOO N2J 3H6, ONTARIO, CANADA PHONE: (519) 747-1138 TOLL FREE: 1-800-268-7328 www.hauser.ca
AUTHOR:	AndreaC	UNITS: (UNLESS OTHERWISE SPECIFIED) INCHES	THIS DESIGN AND/OR DRAWING IS COPYRIGHT BEING THE PROPERTY OF **HAUSER INDUSTRIES INC.** AND SHALL NOT BE COPIED IN FULL OR IN PART NOR LENT OR REPRODUCED WITHOUT WRITTEN AUTHORIZATION FROM **HAUSER INDUSTRIES INC.**
ASSEMBLY DRAWING		MATERIAL:	
SIZE: B	Third angle	WEIGHT ESTIMATE: N/A	
		DRAWING NOT TO SCALE	PROJECT NAME: **CONTOUR PLANTERS**
REV:	SHEET: 12 OF 17	PART NUMBER: **3PS03567M**	DESCRIPTION: **Wall Section Panel 75.25in x 36inH - Wel**

G:\Acad\INVENTOR\Public Seating\Contour Planters\PS-245-UC6K-178 - ASSEMBLY DRAWING.idw