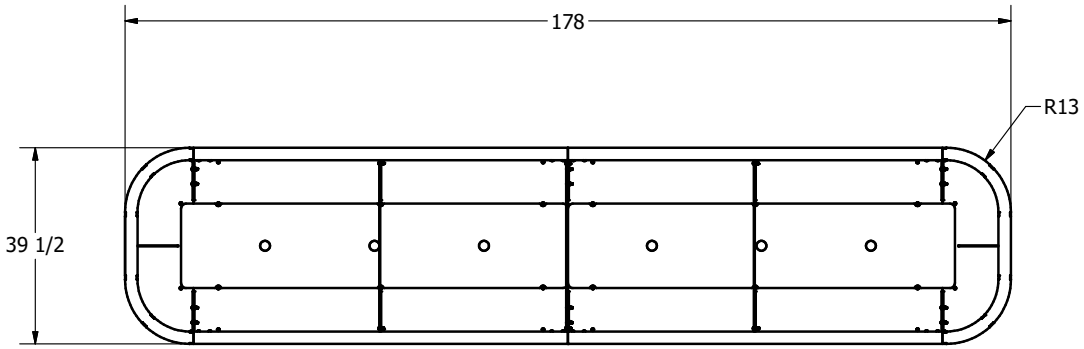

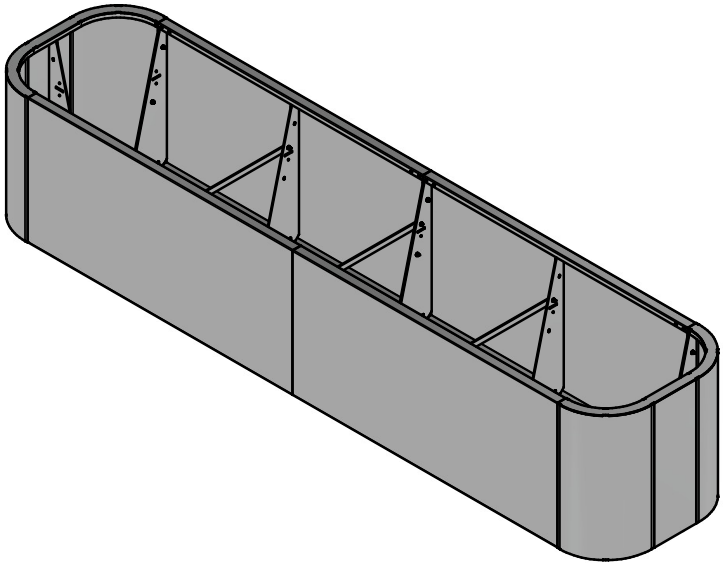

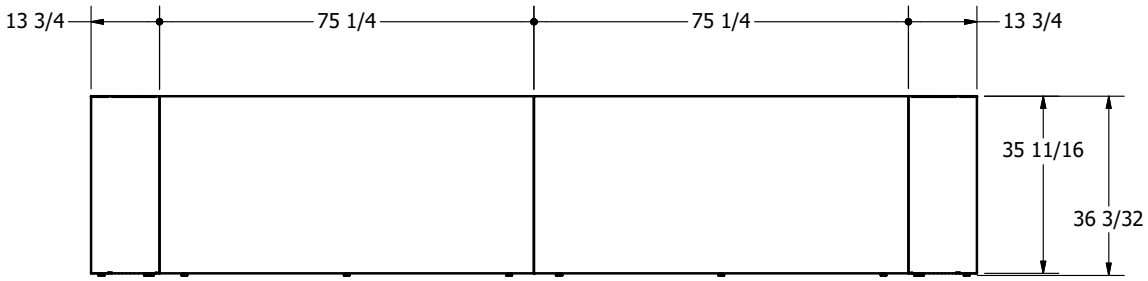

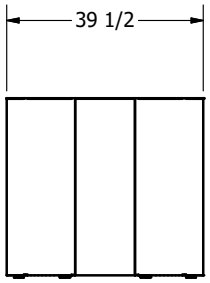

APPROVAL:	C. HAUSER	TOLERANCE: (UNLESS OTHERWISE SPECIFIED) FRACTIONS: ± 1/32" ANGLES: ± 0.5°	HAUSER™ INDUSTRIES INC.
DATE:	2026-03-18		330 WEBER STREET (N), WATERLOO N2J 3H6, ONTARIO, CANADA PHONE: (519) 747-1138 TOLL FREE: 1-800-268-7328 www.hauser.ca
AUTHOR:	AndreaC	UNITS: (UNLESS OTHERWISE SPECIFIED) INCHES	THIS DESIGN AND/OR DRAWING IS COPYRIGHT BEING THE PROPERTY OF **HAUSER INDUSTRIES INC.** AND SHALL NOT BE COPIED IN FULL OR IN PART NOR LENT OR REPRODUCED WITHOUT WRITTEN AUTHORIZATION FROM **HAUSER INDUSTRIES INC.**
ASSEMBLY DRAWING		MATERIAL:	
SIZE: B	Third angle	WEIGHT ESTIMATE: N/A	
		DRAWING NOT TO SCALE	PROJECT NAME: **CONTOUR PLANTERS**
REV:	SHEET: 1 OF 17	PART NUMBER: **PS-245-UC6K-178**	DESCRIPTION: **39.5"x178"-36" CONTOUR PLANTER**

G:\Acad\INVENTOR\Public Seating\Contour Planters\PS-245-UC6K-178 - ASSEMBLY DRAWING.idw