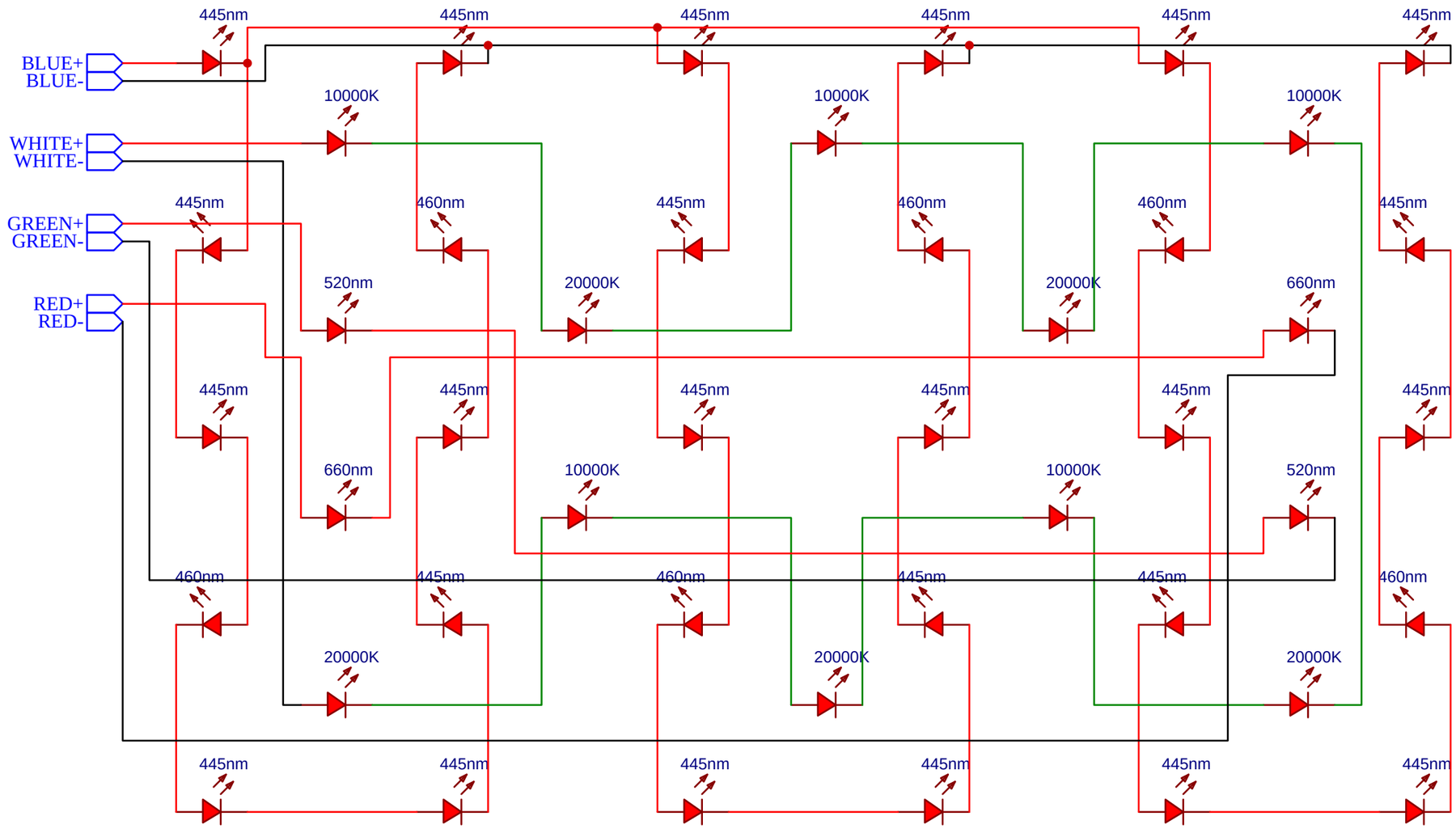

TITLE: led fixture 1		REV: 1.0
EasyEDA	Company: Abimanyu	Sheet: 1/1
	Date: 2023-08-17 Drawn By: timorisu	