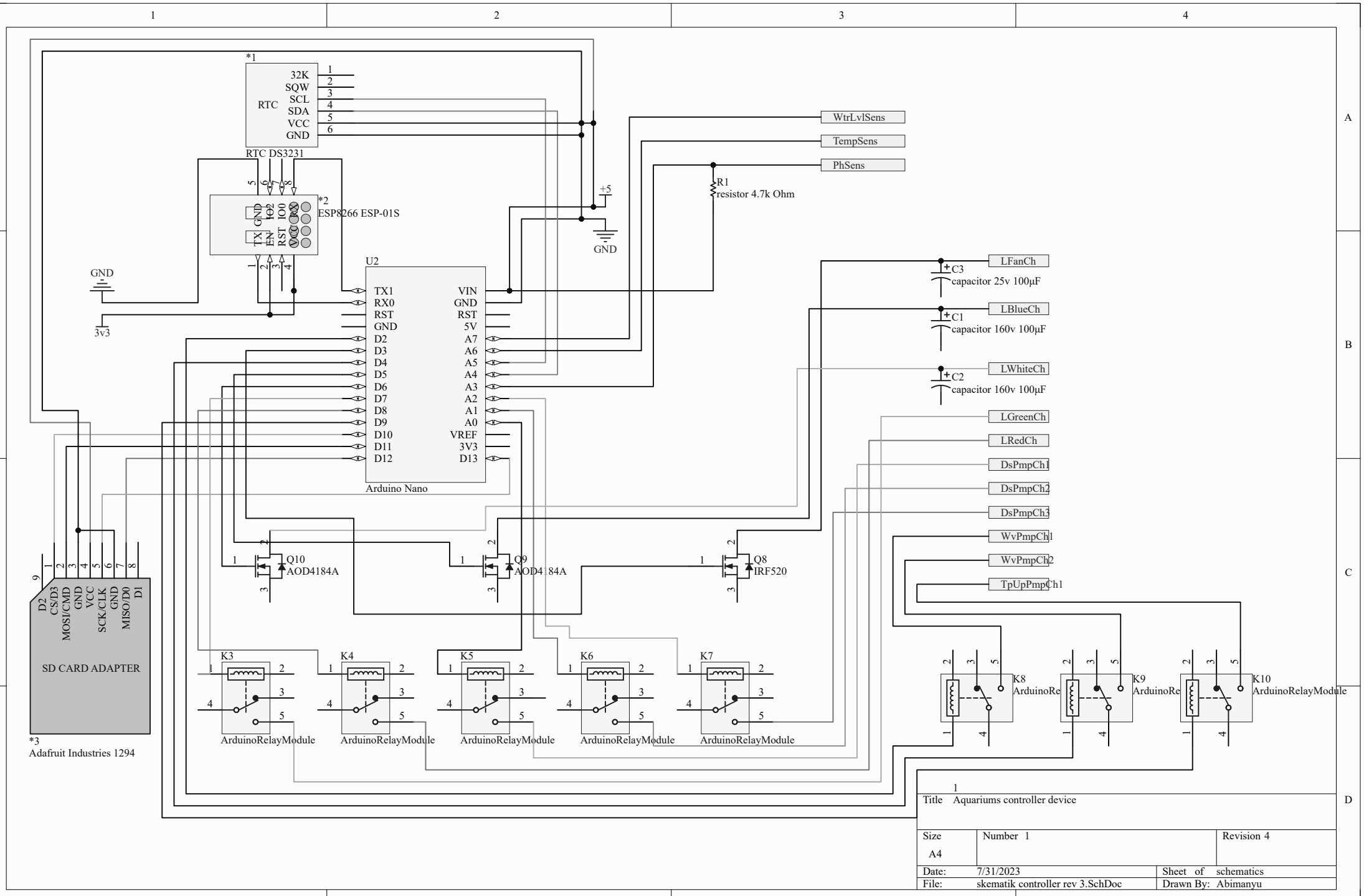

Title	Aquariums controller device	
Size A4	Number 1	Revision 4
Date: 7/31/2023	Sheet of schematics	
File: skematik controller rev 3.SchDoc	Drawn By: Abimanyu	