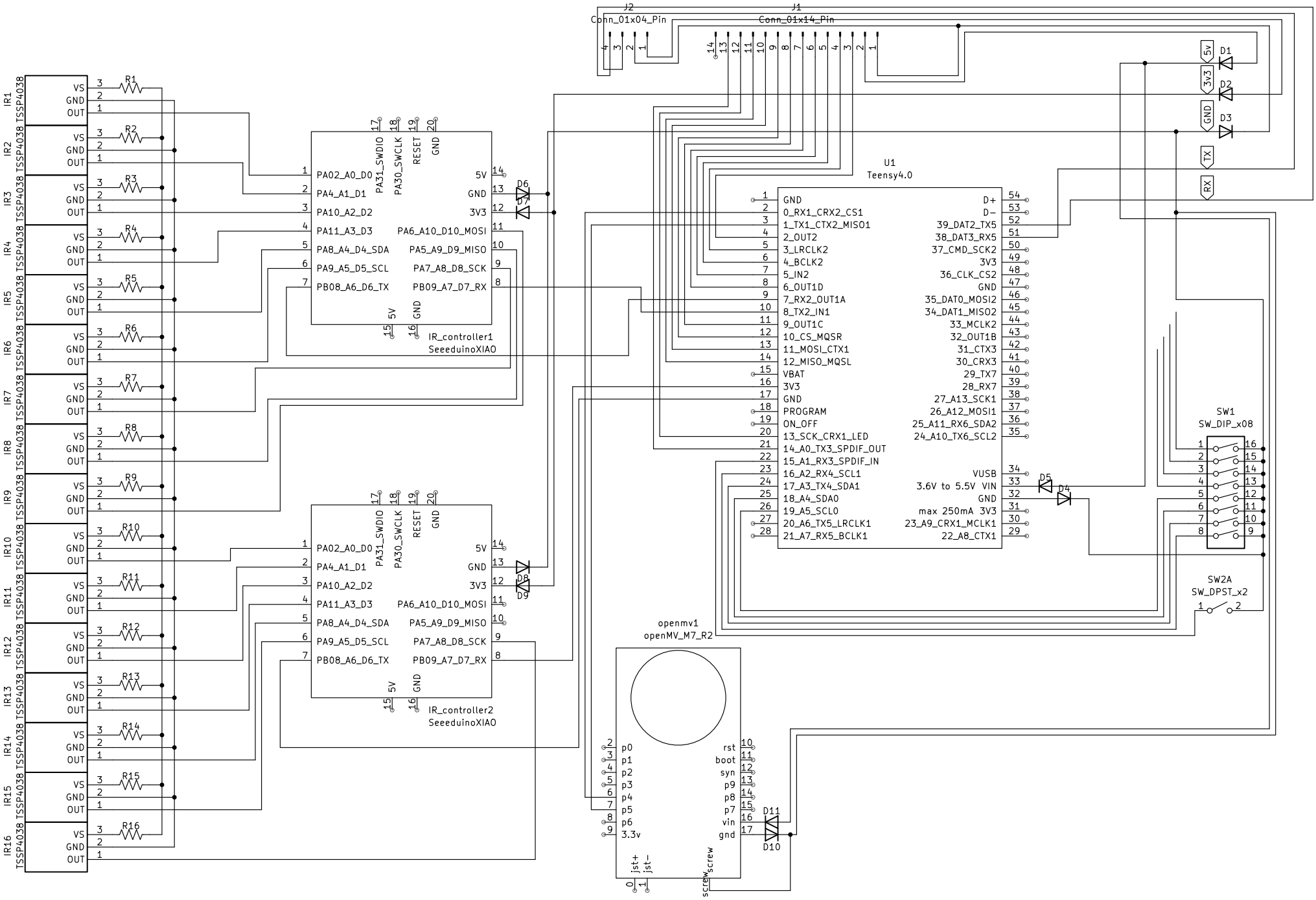
J2
Conn_01x04_Pin
J1
Conn_01x14_Pin
IR1 TSSP4038
IR2 TSSP4038
IR3 TSSP4038
IR4 TSSP4038
IR5 TSSP4038
IR6 TSSP4038
IR7 TSSP4038
IR8 TSSP4038
IR9 TSSP4038
IR10 TSSP4038
IR11 TSSP4038
IR12 TSSP4038
IR13 TSSP4038
IR14 TSSP4038
IR15 TSSP4038
IR16 TSSP4038
VS
GND
OUT
R1
R2
R3
R4
R5
R6
R7
R8
R9
R10
R11
R12
R13
R14
R15
R16
PA31_SWDIO
PA30_SWCLK
RESET
GND
PA02_A0_D0
PA4_A1_D1
PA10_A2_D2
PA11_A3_D3
PA8_A4_D4_SDA
PA9_A5_D5_SCL
PB08_A6_D6_TX
5V
GND
3V3
PA6_A10_D10_MOSI
PA5_A9_D9_MISO
PA7_A8_D8_SCK
PB09_A7_D7_RX
IR_controller1
SeeeduinoXIAO
IR_controller2
SeeeduinoXIAO
D6
D7
D8
D9
U1
Teensy4.0
GND
0_RX1_CRX2_CS1
1_TX1_CTX2_MISO1
2_OUT2
3_LRCLK2
4_BCLK2
5_IN2
6_OUT1D
7_RX2_OUT1A
8_TX2_IN1
9_OUT1C
10_CS_MQSR
11_MOSI_CTX1
12_MISO_MQSL
VBAT
3V3
GND
PROGRAM
ON_OFF
13_SCK_CRX1_LED
14_A0_TX3_SPDIF_OUT
15_A1_RX3_SPDIF_IN
16_A2_RX4_SCL1
17_A3_TX4_SDA1
18_A4_SDA0
19_A5_SCL0
20_A6_TX5_LRCLK1
21_A7_RX5_BCLK1
D+
D−
39_DAT2_TX5
38_DAT3_RX5
37_CMD_SCK2
3V3
36_CLK_CS2
GND
35_DAT0_MOSI2
34_DAT1_MISO2
33_MCLK2
32_OUT1B
31_CTX3
30_CRX3
29_TX7
28_RX7
27_A13_SCK1
26_A12_MOSI1
25_A11_RX6_SDA2
24_A10_TX6_SCL2
VUSB
3.6V to 5.5V VIN
GND
max 250mA 3V3
23_A9_CRX1_MCLK1
22_A8_CTX1
D5
D4
5v
3v3
GND
TX
RX
D1
D2
D3
SW1
SW_DIP_x08
SW2A
SW_DPST_x2
openmv1
openMV_M7_R2
p0
p1
p2
p3
p4
p5
p6
3.3v
rst
boot
syn
p9
p8
p7
vin
gnd
D11
D10
jst+
jst−
screw
screw