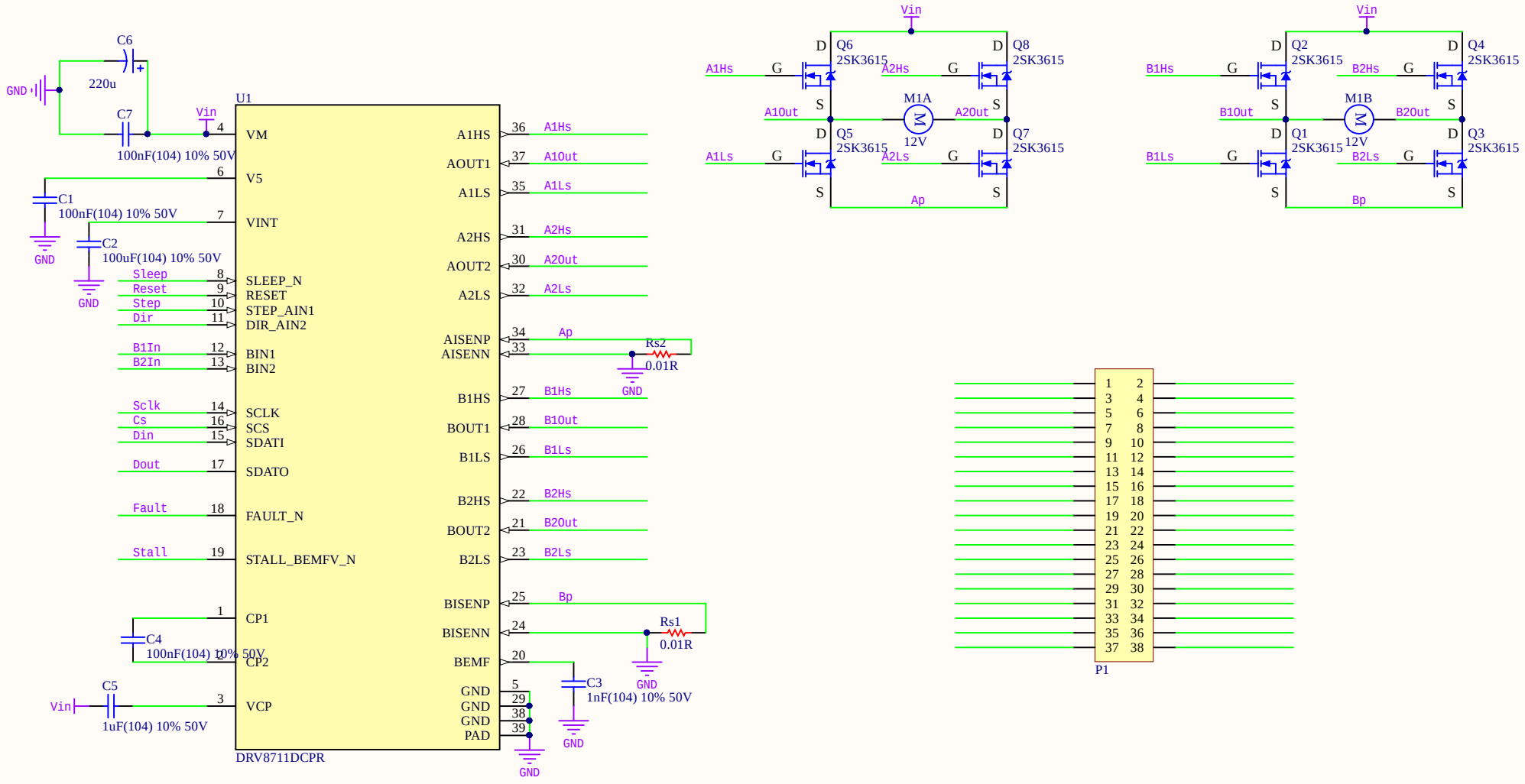

Title		
Size A4	Number	Revision
Date: 2019/7/16	Sheet of	
File: F:\PcbWorks\Dxp\DRV8711MOD.SchDoc	Drawn By:	