SHAFTING ARRANGEMENT AND DETAIL

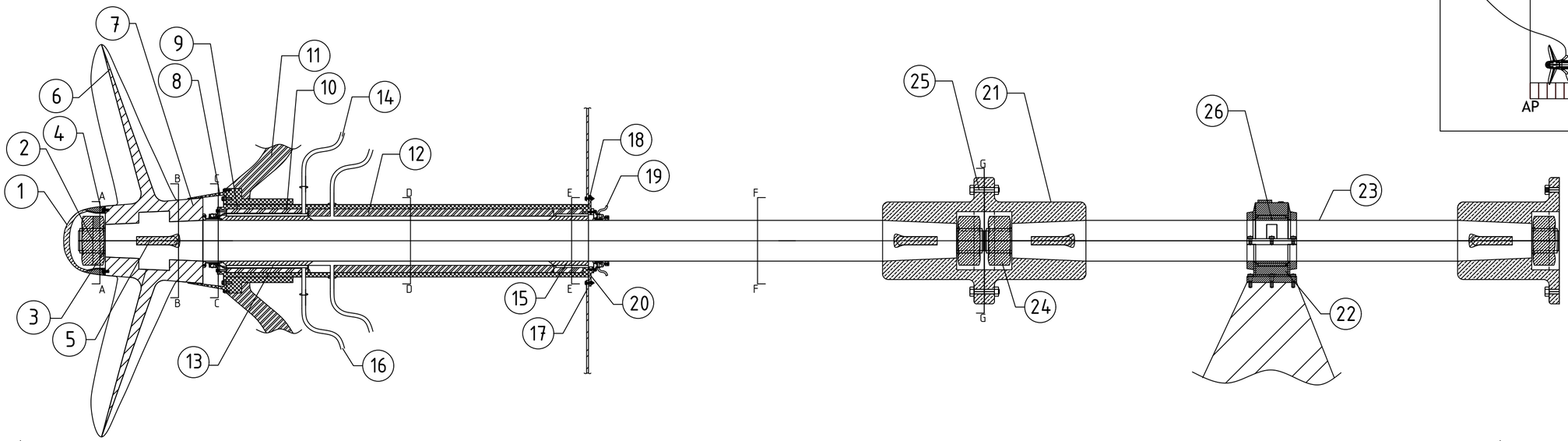

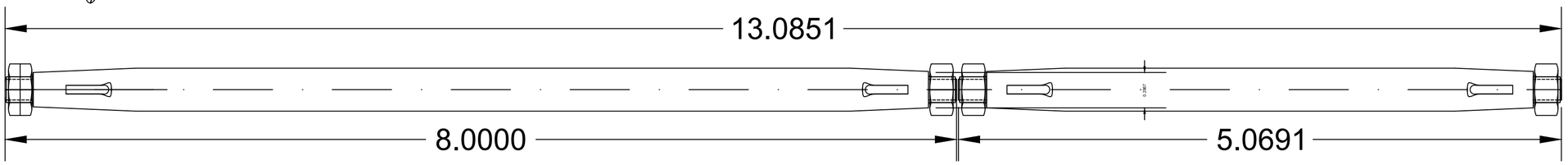

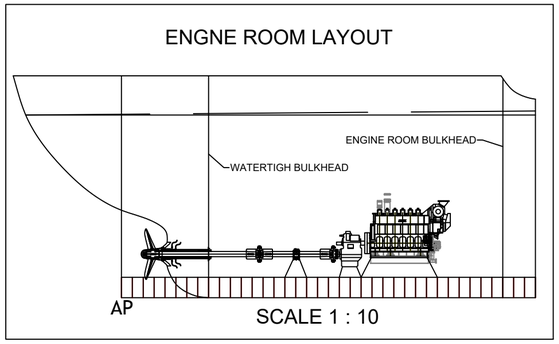

No.	Part Name	Material
1	Hub Cap	Manganese Bronze
2	Propeller Nut	S 40 C
3	Washer	-
4	Hub Cup Bolt	Ni Al Bronze
5	Wedges	S 40 C
6	Propeller Blade	Ni Al Bronze
7	Propeller Boss	Ni Al Bronze
8	Rope Guard	Stainless steel
9	After Seal Casing	Stainless Steel
10	Bush Bearing	Bronze
11	Stern Post	Marine Steel
12	Stern Tube	Marine Steel
13	Bearing	Bronze
14	After Seal Pipe inlet	Alloy Steel
15	Shaft Sleeves	Ni Al Bronze
16	After Seal Pipe Outlet	Alloy Steel
17	After Peak Bulkhead	Marine Steel
18	Bolt	M 20
19	Forward Seal Pipe Inlet	Alloy Steel
20	Forward Seal Casing	Rubber
21	Intermediate Coupling	S 40 C
22	Bearing House	Bronze
23	Shaft	S 40 C
24	Shaft Nut	S 40 C
25	Coupling Bolt	S 40 C
26	Thrust Bearing	Bronze

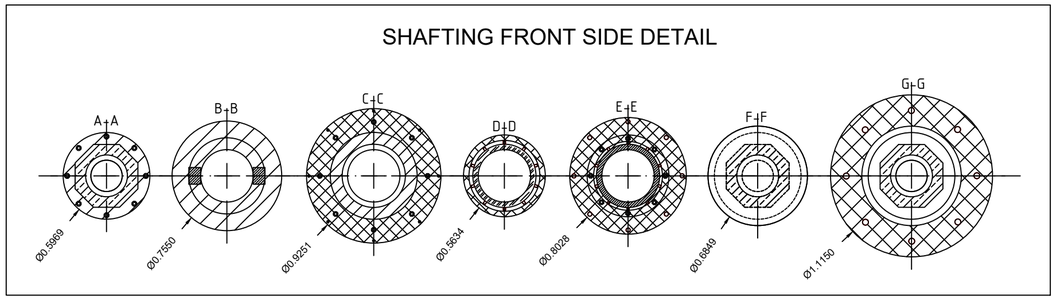

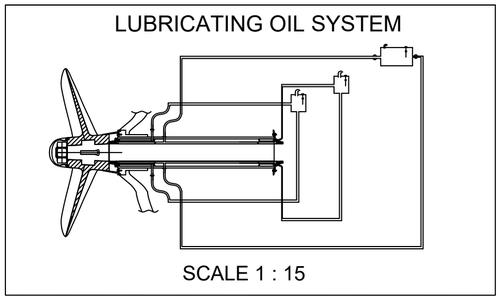

No.	Hatch	Material
1		Manganese Bronze
2		S 40 C
3		Ni Al Bronze
4		Alloy Steel
5		Bronze
6		Marine Steel
7		Stainless Steel
8		Rubber
9		M 20

BOSS PROPELLER DIAMETER (mm)		
Ds	360	mm
Db	720	mm
Dba	611	mm
Dbf	755	mm
Lb	863	mm
tb	91	mm
Da	288	mm
rf	121	mm
rb	91	mm

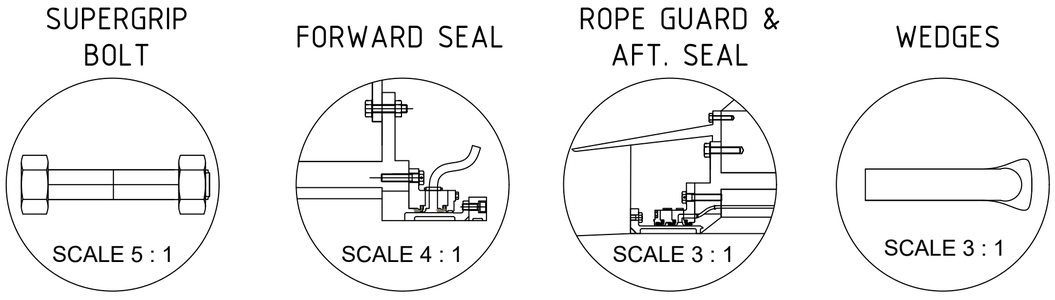

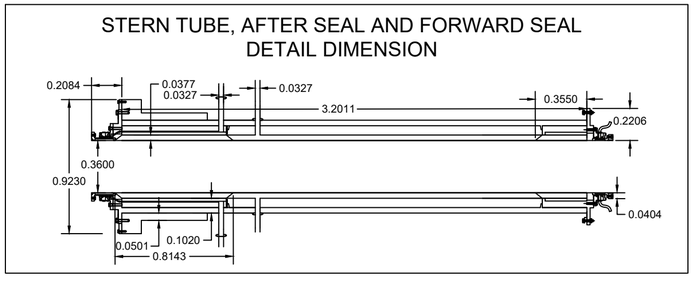

INSTITUT TEKNOLOGI SEPULUH NOPEMBER
FAKULTAS TEKNOLOGI KELAUTAN
DEPARTEMEN TEKNIK SISTEM PERKAPALAN

MT. RINEJI

SHAFTING ARRANGEMENT AND DETAIL

SKALA : 1 : 30	TANDA TANGAN	TANGGAL	KETERANGAN
MAHASISWA : Abraham Kaleb Martua Manulang			A2
PEMBIMBING :			
KOORDINATOR :			04211941000050