Data Availability and Data Protection

Data Availability - Single Point of Failure and Redundancy

A single point of failure represents the failure of a single hardware component that can lead to loss of data access or potential loss of data.

Consider a scenario in which multiple servers are connected through a router in a data center. In such cases, failure of that router makes none of the servers available to the users.

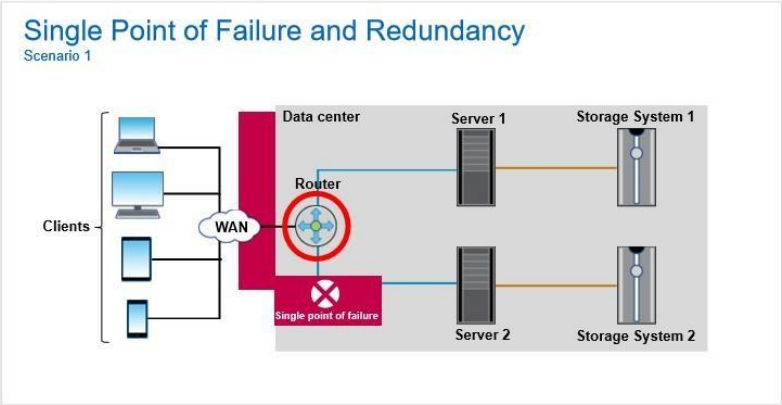

In another scenario, consider a data center in which all the applications that store and retrieve data form a single storage system. The storage controller is the compute part of a storage system that runs the storage software.

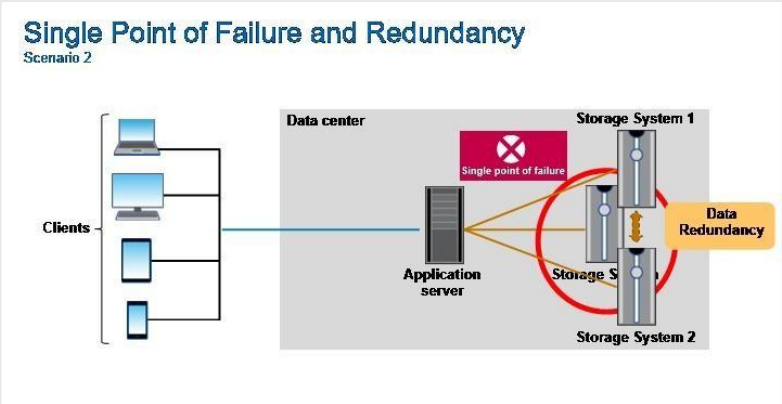

If the storage controller fails, the storage software cannot run, and the array goes offline due to single point of failure.

How do you overcome a single point of failure?

To remove the single point of failure, you must build in redundancy, which is the inclusion of extra components. These components can include, for example, storage systems, application servers, or host bus adapters (or HBAs) that enable continued operation if any one of the working components fails. In this example, a redundant storage controller is added to maintain data accessibility.

High-availability (HA) pairs and fault tolerance work on the principle of redundancy.

High Availability

When you talk about designing and deploying resilient IT systems, you mean that the IT infrastructure is highly available. High availability is the ability of an IT system or component to perform its function continuously and without interruption for a desirably long time.

A typical example is deploying dual independent SAN fabrics with servers that are connected to both the fabrics. If one fabric fails, servers can still access storage systems over the surviving fabric.

An HA pair is two storage systems (nodes) whose controllers are connected to each other directly.

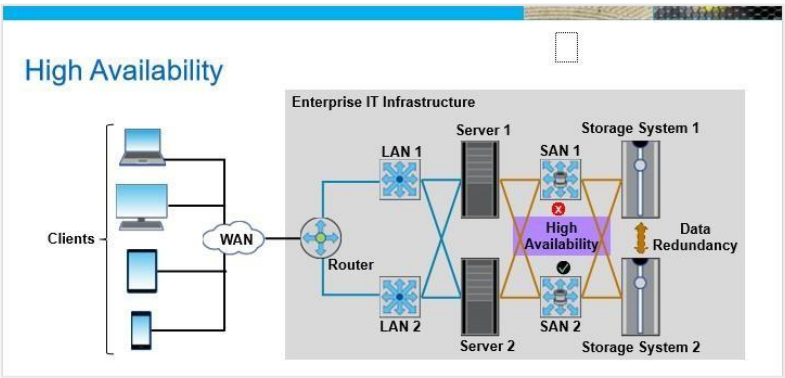

Fault Tolerance

Critical operations such as airline and bank transactions should have systems that can take over when the main system fails. The mechanism that enables the system to continue operating properly is known as fault tolerance. In the fault tolerant model, the priority is not the ability of a system to deliver high performance due to failure but to maintain operational performance at a reduced level.

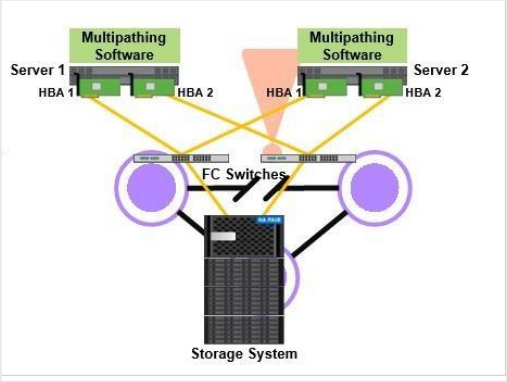

Multipath I/O is a fault-tolerance and performance-enhancement technique in which you can use more than one physical path that transfers data between the host and its storage. Configuration of multiple paths involves installing two HBAs on a server, which balances the load across the two HBAs and increases the data availability through path failover and improves performance. Multipathing software provides the redundant path to the storage array in case one of the physical paths is disrupted.

Data Protection

Data protection is no longer just an option: The stakes are high. Sensitive data, such as health and biometrics, are subject to the highest levels of protection.

Why do businesses need data backup and protection?

Data backup and protection are necessary to protect data from disasters such as weather, human error, or technology failures.

They are necessary to be compliant with stringent government retention requirements, such as the SEC 17a-4 rule, HIPAA compliance, Sarbanes-Oxley compliance, General Data Protection Regulation (GDPR) requirements, and many others.

They are necessary to guard against the rising number of distributed denial of service (or DDoS) attacks, virus attacks, ransomware attacks, and other external threats.

They are also necessary to protect data against malicious internal access from rogue administrators, malicious or compromised users, and other internal threats. Business Continuity

Often, business continuity and disaster recovery are used interchangeably.

However, business continuity (or BC) is a progression of disaster recovery that enables an organization to continue functioning after or during a disaster, rather than simply recovering from a disaster.

Business continuity requires a business continuity plan. If you want to minimize the effect of a disruptive incident, prepare for the known unknowns that could endanger the company's accomplishment of its primary mission.

BC planning details steps to be taken before, during, and after an event to maintain the financial viability of an organization.

Embed flexibility and resilience into business continuity planning. The key solutions for business continuity include setting up a resilient IT infrastructure and using data protection mechanisms, such as backup and replication.

Business Continuity Key Metrics

Data is the most important currency. That fact is the reason that it is important to protect your most critical data with a strong business continuity plan. To achieve this goal, you must understand the key metrics that apply specifically to data protection: recovery time objective (or RTO) and recovery point objective (or RPO).

- **Recovery Time Objective:** The RTO is the maximum acceptable amount of time that can elapse before data is made available after a failure. An RTO of 20 minutes means that an application or a dataset will be back online in 20 minutes after a failure.
- **Recovery Point Objective:** The RPO is the maximum acceptable amount of data that can be lost if a failure occurs. For instance, an RPO of one hour means that you can restore an application or dataset to a point no more than an hour before the time the outage occurred.

Identifying the RTO and RPO helps you to select the data protection solution or solutions that meet a customer's SLA requirements.

Other Key Metrics

- **Mean time to recovery (MTTR)** is the average time that a device takes to recover from any failure.
- **Mean time to failure (MTTF)** is the length of time a device or other product is expected to last in operation.
- **Mean time between failures (MTBF)** measures the predicted time that passes between one previous failure of a system to the next failure during normal operation.
- **Round-trip time (RTT)** is the duration in milliseconds (ms) it takes for a network request to go from a starting point to a destination and back again to the starting point.

Snapshot Copies

A storage snapshot is a copy of the live production volume, which is created at a particular point in time.

After a snapshot is taken, you can use it to recover files or volumes that were accidentally deleted by creating a volume from that Snapshot. When you discover that your data was corrupted two hours ago, you can go back to the snapshot and know that you have a good copy of data. Snapshot copies are used in data replication features.

Snapshots alone do not make a backup, even though they are extremely useful for local recovery of data from different operational disasters. For instance, if you lose the RAID set that hosts the primary volumes, the snapshots are lost as well. For a true backup strategy, snapshots must be replicated onto another device, preferably at another site.

Periodic point-in-time snapshots can be replicated to one or more disaster recovery sites. If a primary site does fail, due to natural disaster or other catastrophic failure, businesses can be assured that their data is frequently backed up to multiple recovery sites. Snapshots provide asynchronous disaster recovery.

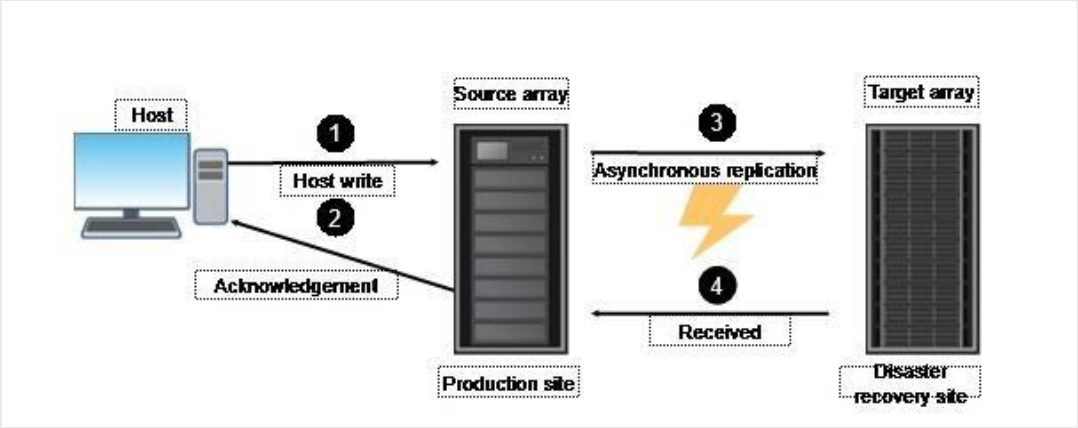

Data Replication

Replication is the process of creating an exact copy of data. This copy of data that is known as a “replica” can be used to restart operations if there are failures or disasters. Because the replica is an exact copy of production data, it enables operational recovery within a short time after an outage occurs.

There are two types of replication: local replication and remote replication.

Local Replication

Local replication is done within the same storage system in which production data is stored or within the same data center. It enables operational recovery in case the primary copy of the data is lost.

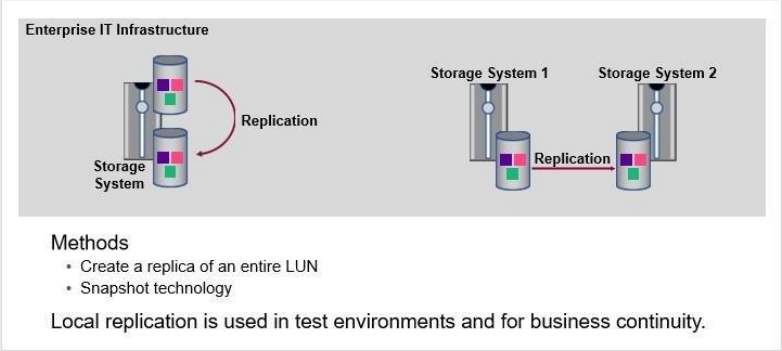

Local replication can be performed on a storage system by creating a replica of an entire LUN within the storage system. All writes to the primary LUN are mirrored to the replica as well. Another method for local replication is snapshot technology. A snapshot is a point-intime copy of a file system that enables fast recovery of data.

Apart from enabling business continuity, replicas are also used in test environments. Instead of testing new applications and features on production data, they can be tested on replicas.

Remote Replication

In remote replication, data is replicated from a storage system at a primary site to a storage system at a remote or secondary site. Remote replication enables operational recovery at the secondary site if there is a site-wide outage that occurs at the primary site.

Remote replication can be performed in synchronous, asynchronous, and semi-synchronous modes.

Remote Replication: Synchronous

Synchronous replication creates a mirrored copy of data at a remote site, keeping that replica continuously updated as changes occur in the primary site.

All writes to the source are synchronously replicated to the remote replica. After the data is written to the remote replica, an acknowledgment must be sent back from the remote site before the write is considered complete.

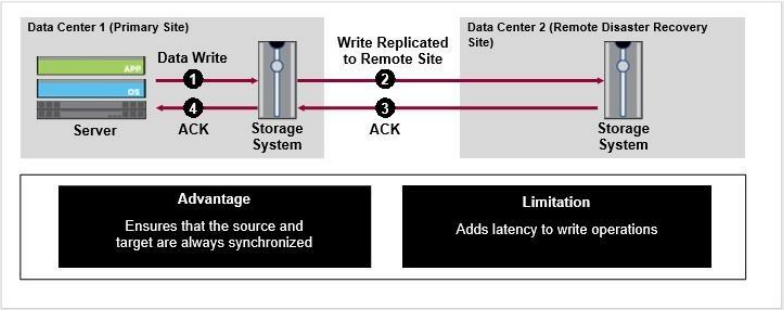

The advantage of synchronous replication is that it ensures that the source and target are always synchronized, which provides near-zero RPO.

This operation, with the distance between the sites, the network bandwidth, and the amount of data being replicated, adds latency to write operations. This latency can have a negative effect on overall performance.

Remote Replication: Asynchronous

Asynchronous replication decouples the write to the secondary site from the write that is carried out at the primary site. In asynchronous replication, all writes are signaled as complete when they are committed to the source volume. There is no need for the data to be written to the replica at the remote site for the operation to be considered complete.

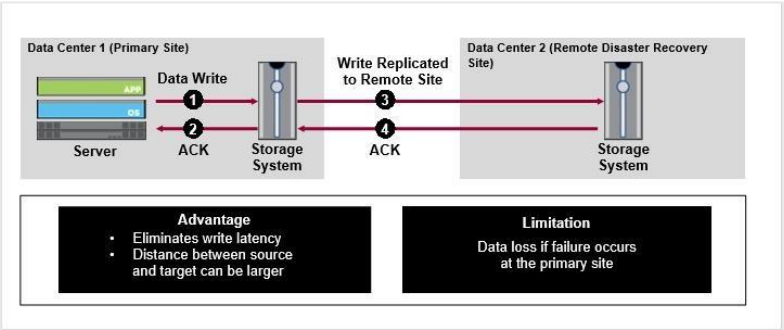

The process of copying the data to the target is performed asynchronously after the transaction is committed to the source. This process eliminates write latency and improves performance. Another advantage of asynchronous replication is that it enables the source and target sites to be at a further distance from each other than what is supported by synchronous replication.

However, there is the potential risk of data loss in case a failure occurs at the primary site. This potential loss exists because the replica might lag behind the source volume by some amount of time.

Multisite Remote Replication

Remote replication can also be performed between more than two sites, with replication happening between them in a combination of synchronous and asynchronous modes.

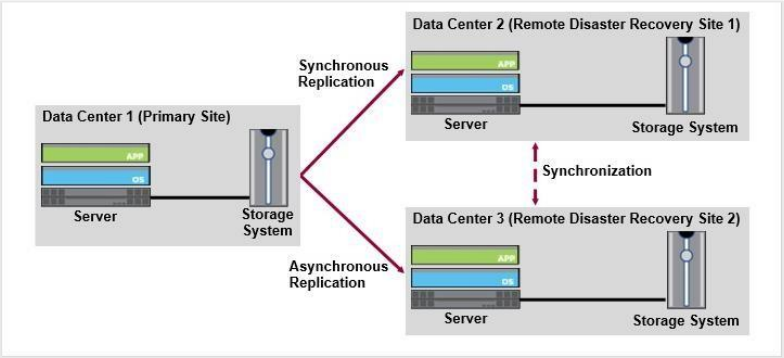

Data Protection: Backup

Data Backups

In simple terms, a backup is an extra copy of current or recent data to enable operational recovery if there is data loss or corruption.

There are two ways for taking backups: cold backup and hot backup.

- **A cold backup** works for any type of application but the application must be shut down for the entire backup process, which results in application downtime. Therefore, a cold backup scenario is undesirable in a 24/7 business environment.
- **A hot backup** enables the application to remain operational during the entire backup process. The application, however, must be designed to run in a “hot backup mode.”

Backups Types

There are four types of backup.

- **Full backup** backs up all the data. The advantage of a full backup is that data can be easily restored at a high speed.
- **Cumulative incremental backup** takes a backup of all the data that has changed since the last full backup.
- **Differential incremental backup** takes a backup of all the data that has changed since the last incremental backup.
- An **incremental forever backup** is performed by using only one full backup ever.

Components of a Backup Environment

The primary components in a backup environment include the primary backup server (also called the backup server). You need the secondary backup server (also called the storage node) and a backup target (disk, tape, or optical drive that is used to store backup data). You also need the backup client, which is software that resides on the systems that must be backed up.

Typical Backup Architecture

The primary backup server is the component that is responsible for managing and maintaining the backup schedules. It maintains configuration information for the backup application and houses the backup catalog.

The backup catalog contains a history of all the files that have been backed up. The backup catalog also tracks the location of all the backups on the backup devices and which backup server wrote that data.

The storage node does not host any configuration information or the backup catalog. It only acts as a gateway to the backup targets that store backup data.

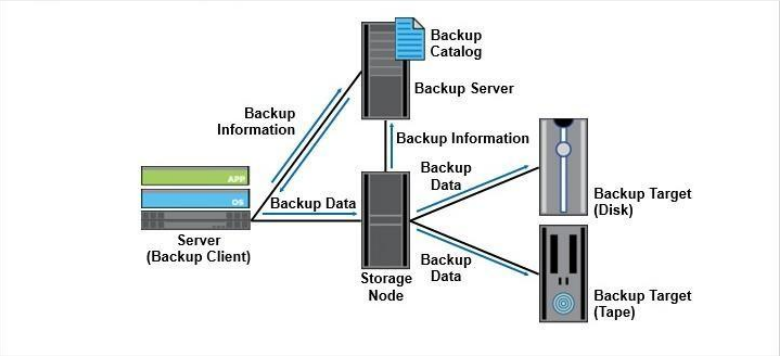

The figure shows a server that has data which needs to be backed up. The server runs the backup client, which follows the instructions that are sent to it by the backup server to perform the backup operation.

When the backup server starts a backup operation according to the backup policy, it

instructs the backup client on the server to send data to the storage node. The backup client sends the data to the storage node, which in turn sends the data to the backup target. The backup server then updates the backup catalog with the information of the completed backup operation. Backups Topologies

LAN-Based Backup

In LAN-based backup, backup data is sent over a LAN from the servers to the backup target. This LAN can be either the production LAN or a LAN that is dedicated for only backup. The dedicated LAN can be a virtual LAN (or VLAN) or a physical LAN.

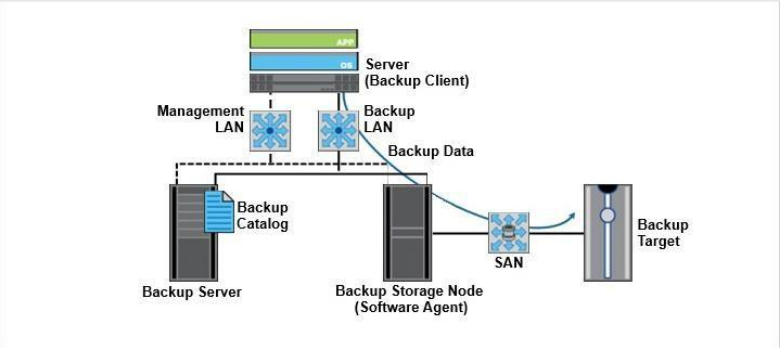

This graphic depicts a typical LAN-based backup environment with a dedicated LAN for backup and a management LAN for management traffic. The backup client sends data from the server that is being backed up over the LAN to the storage node.

The storage node then transfers the data to the backup target over a SAN.

LAN-Free Backup (SAN-Based)

In LAN-free backup, data is typically backed up over a SAN. Therefore this approach is also called SAN-based backup. LAN-free backup provides higher performance when it is compared to LAN-based backup.

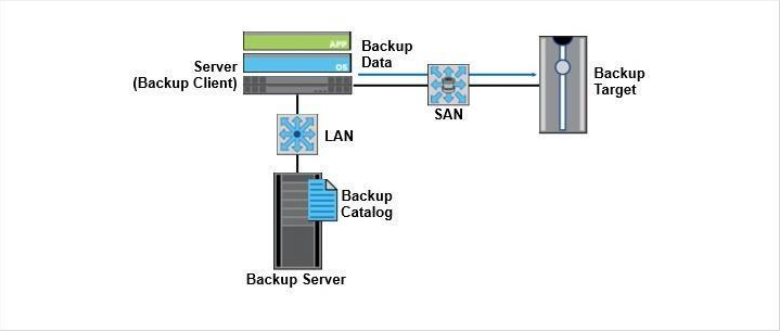

This graphic depicts a typical SAN-based backup environment. In this example, the backup client on the server that is being backed up sends the data over a SAN to the backup target.

SAN Backup

This graphic depicts a typical SAN backup environment. In this example, [1]a LUN is provisioned to a server from a storage system. The server and the storage system connect over a SAN. A backup target also connects to the same SAN. When a backup operation is initiated, the data on the LUN [2]is copied directly to the backup target without passing through the server.

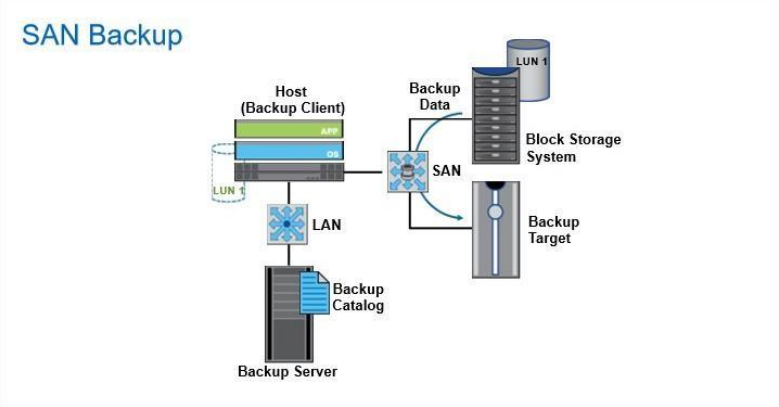

This approach provides high performance and reliability but at a higher cost.

NDMP-Based Backup

The last backup method is NDMP-based backup. NDMP stands for Network Data Management Protocol, which is an open protocol for NAS backups. NDMP enables data on a NAS device to be backed up on a backup target in a way like serverless backup. The backup data is sent directly from the NAS device to the backup target without passing through a server.

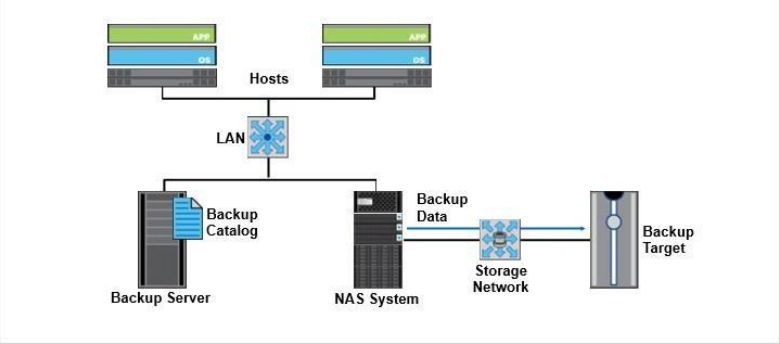

Storage Security and Compliance Storage Security

The CIA triad of confidentiality, integrity, and availability forms the basis of data security.

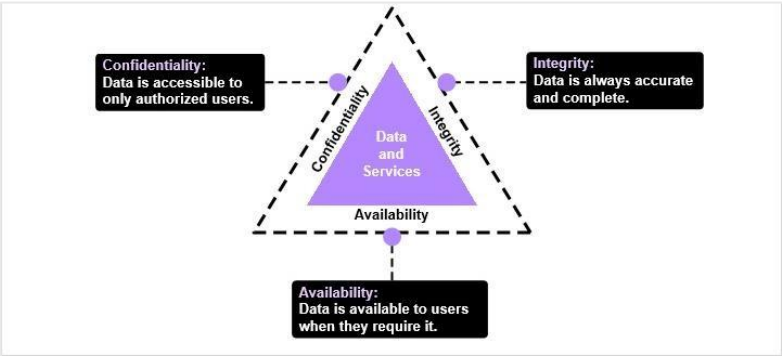

- **Confidentiality** is the property that data is accessible to only authorized users and not available to any unauthorized individuals or processes.
- **Integrity** means that the accuracy and completeness of data is always maintained. Unauthorized or undetected modifications to data cannot be carried out.
- **Availability** means that data must be available to authorized users when they require it. This requirement entails the need for high-availability (or HA) systems to address failures and outages.

Key Security Mechanisms

There are several security mechanisms that are implemented at the network and storage levels in enterprise data centers to protect data against unauthorized access and modification.

The main security mechanisms that you deploy at the network level include firewalls, intrusion detection systems (IDS) and intrusion prevention systems (IPS), virtual LAN (VLAN), and zoning.

The important security mechanisms that are required on storage systems include access control, LUN masking, and data encryption.

Security Mechanism: Firewall

A firewall is a network security system that monitors outgoing and incoming network traffic and controls the traffic flows based on pre-defined security policies. It is typically deployed between an internal network and an external network, such as the internet. If the outgoing traffic is to a restricted website, the firewall blocks that traffic. Similarly the firewall also blocks incoming traffic that it deems to be unsafe.

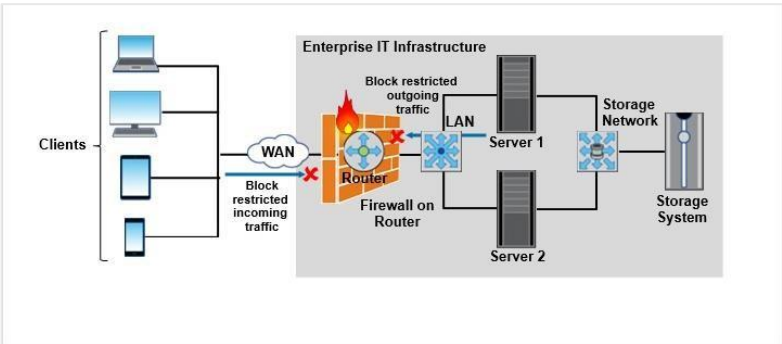

Security Mechanism: IDS/IPS

The threat landscape is constantly changing, and attacks are so sophisticated that they can thwart the networks that are secured by encryption or traditional firewalls. Firewalls do not signal an attack from inside the network.

Intrusion detection is the process to detect events that can compromise the confidentiality, integrity, or availability of a resource. Intrusion prevention is the process of performing intrusion detection and then stopping the detected incidents.

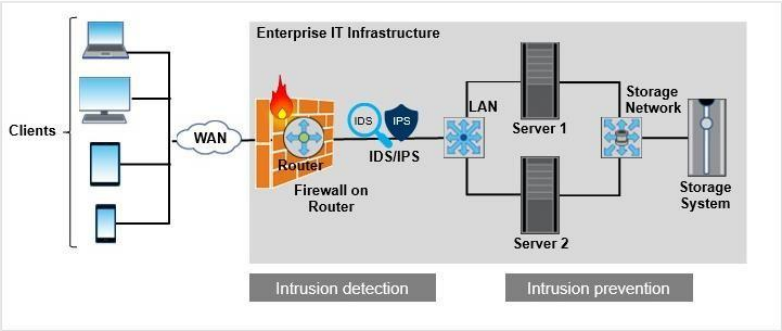

IDS and IPS are security measures that are deployed in your network to monitor and stop potential incidents.

Many IDS systems today are AI-based due to the speed of new advancements in technology that are available to both network security teams and cybercriminals.

Security Mechanism: VLAN

A virtual LAN (or VLAN) is a logical network that is created on a switch by grouping switch ports. A VLAN enables communication between a group of nodes with shared functional requirements. In the figure, there are six nodes that are connected to a switch and are grouped as VLAN Sales, VLAN HR, and VLAN IT.

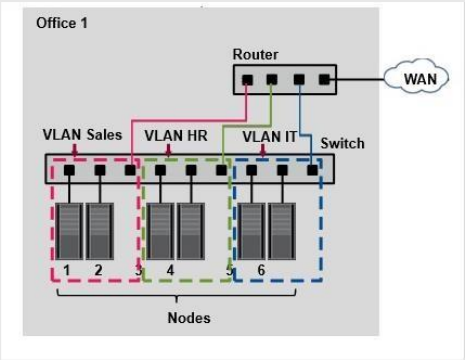

You identify each VLAN by a unique 12-bit VLAN ID. A node can be made a member of a VLAN by assigning it that particular VLAN ID.

VLANs provide several advantages. One among them is enforcement of security policies.

VLANs improve security by reducing threats. Internally, you can control users from gaining unwanted access over the resources. In the figure, the Sales department cannot access the HR and IT departments directly. External threats are also minimized. For example, if an outside attacker gains access to the Sales VLAN, the exposure is contained to that network. This containment is achieved by the boundaries and controls that are in place to segment it from the other VLANs.

Security Mechanism: Zoning

Zoning is a technique that is used in FC SANs to enable node ports to be grouped and to communicate with each other within that group. For example, zoning can be used to specify which servers can communicate with a specific storage system. Zoning can also be used to specify which physical switch port a server must plug in to connect to the fabric.

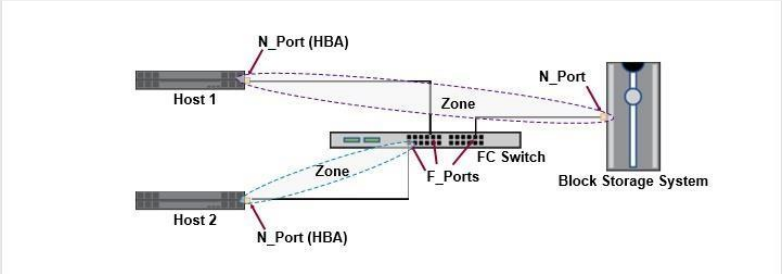

Security Mechanisms

Security Mechanism: Access Control

Access control uses two basic processes: authentication and authorization.

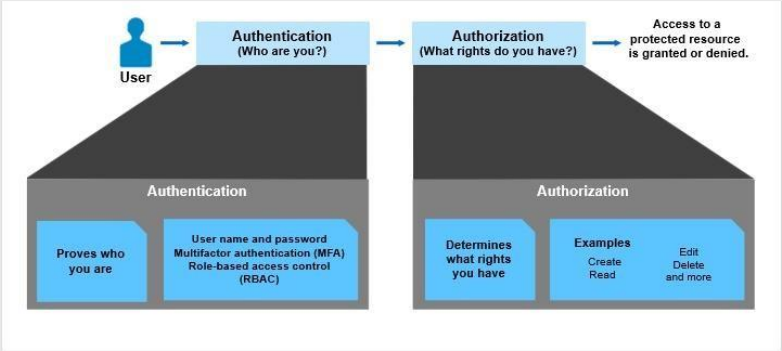

Authentication is a process of verifying the identity of a user. The simplest way to authenticate is by assigning user names and passwords to all users. You could also have multifactor authentication (MFA) which requires a unique key apart from the password, which adds another layer of security. The unique key is generated either by a special hardware device or a mobile app. Role-based access control (RBAC) is the practice of managing privileged access to infrastructure through a central directory of users, roles, and teams.

After successfully identifying and authenticating a user, the next step is authorization. Authorization is the process of determining which resources that users have the permission to access and [7]what actions they can perform. When users are created, they are typically assigned roles, with each role having a set of access rights. Such policies determine which data and services a user has access to and under what conditions.

There are several access control tools that you can use, such as Access Control Lists in Windows, File Permissions in UNIX, Kerberos, and the Challenge-Handshake Authentication Protocol (or CHAP).

Security Mechanism: LUN Masking

LUN masking is the process of associating specific LUNs to specific HBAs on servers. This process enables providing access to several LUNs over the same front-end port of a storage system. However, a server can access only that LUN which is associated with its HBA. The other LUNs are masked from this server and are inaccessible.

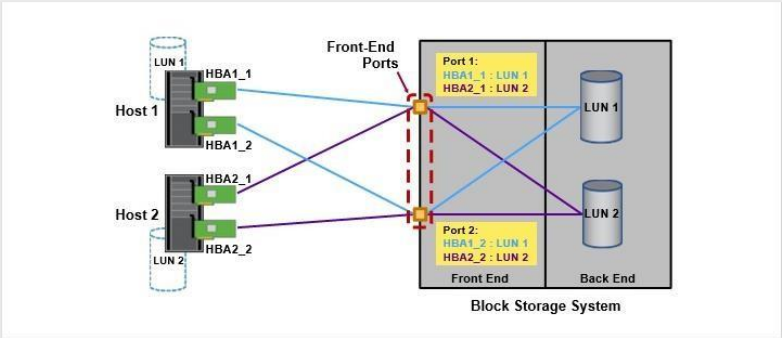

Security Mechanism: Data Encryption

Data encryption is a highly effective security mechanism. Encryption uses cryptographic methods to encrypt data that is both in flight and at rest. Encryption protects data from tampering, theft, leakage, and network snooping.

Governance, Risk Management, and Compliance

Governance, risk and compliance, also known as GRC, is an important combined area of focus. It is developed to cover an organization's strategy for managing the overall governance, enterprise risk management, and compliance with regulations.

Governance refers to the ethical management which ensures that the organizational activities are aligned to support the organization's business goals.

Risk refers to minimizing the risks that an organization might face by having a comprehensive IT risk management process to optimize efficiency and increase effectiveness.

Compliance refers to the level of conformance to business operations or practices.

GRC improves the quality of information that is gathered and helps in improved decisionmaking.

As GRC provides a more nearly complete picture of the organization and processes, it enables transparency across risk and compliance processes.

GRC minimizes workplace “silos,” in which information does not flow in or out in a productive manner.

Activities that do not add value are eliminated and value-creating activities are streamlined to reduce time and any undesirable variations.

Data Governance

Data governance is a set of principles and practices that ensure high quality through the complete lifecycle of your data. Data governance is essential in facilitating adherence to compliance requirements and ensuring that organizations are consistently compliant with all levels of regulatory requirements.

Building an effective data governance strategy involves the people, processes, and technologies that are required to manage and protect the data assets of the company.

You need the right people to govern various types of the data so that it can effectively support the goals of the organization.

To understand your data or monitor and resolve issues effectively, you require processes in place as to how data is to be stored and used within an organization.

It is necessary to select the right tool to help to run and maintain the data governance strategy.

Risk Management

Compliance helps to protect organizations from various unique risks. Risk management is predicting and managing risks that could hinder the organization from reliably achieving its objectives under uncertainty.

All risk management processes follow some basic steps.

1. Identify external hazards and risk factors that have the potential to cause harm to the assets or information within a business environment.
2. When you are exposed to these risks, identify the potential damage caused and the systems at risk.
3. There are many stakeholders in the risk management process, and each of them has different responsibilities.
4. Manage risk by implementing the right technology and mitigate the effects of a data breach. Encryption-based storage security is enabled by using strong access-control techniques. Audit logging can be used for monitoring, analysis, and backup purposes.

Compliance Overview

There are several storage operating systems that offer a portfolio of data security capabilities to help you to address today's security threats and governance, risk, and compliance requirements. This lesson covers the key considerations in storage compliance.

In data storage terminology, the word compliance refers to industry-wide government regulations and rules that cite how data is managed and the need for organizations to be in compliance with those regulations.

Compliance only ensures that you meet legally mandated minimum standards. Data security, as you learned in the previous lesson, covers all the different security mechanisms for effectively managing information-related risk that might or might not equate to being compliant.

Every state and country has different regulations that companies must comply with if they offer services within their borders.

Noncompliance can result in loss of brand reputation, severe penalties depending on the negligence level, and business disruption.

Policies, Regulations, and Laws

Businesses need data backup and protection to be compliant with stringent government retention requirements. These requirements include such as the SEC 17a-4 rule, HIPAA compliance, Sarbanes-Oxley compliance (SOX), and General Data Protection Regulation (GDPR) requirements.

Depending on the industries that your organization operates in and the countries in which it does business, your company might be subject to one or more regulations that have implications.

For example, the main motivation of HIPAA was to improve health care efficiency and patient care outcomes by encouraging the free flow of health information in the US.

For SOX, enterprises must insure the integrity of their financial systems. For example, they must prevent rogue insiders from viewing or modifying financial records.

Penalties for failing to protect data under these regulations can prove to be costly to organizations. HIPPA audits were delayed, which led to noncompliance from many organizations.

Data Archiving

Compliance is a primary driver for data archiving. It is used for long-term data retention and regulatory compliance requirements, unlike the backup that is used for short-term data recovery.

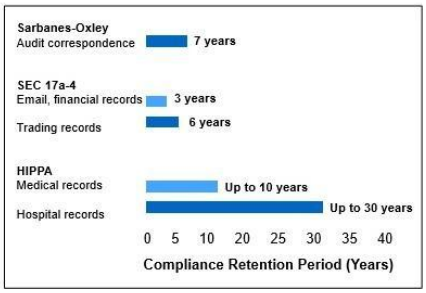

There are many technologies that ensure that the original archives of the organization are never altered. One such is the WORM (Write Once Read Many) technology that can archive data in non-rewritable, nonerasable format. Using the content-addressable storage system (CAS), you can generate a unique content address for each record. This ability enables easy online retrieval while preserving the authenticity of the data.

Implementing a data archiving solution is beneficial because it reduces the cost of primary storage by moving inactive, unstructured data to less expensive and high-capacity archive storage media. Archiving data also reduces the volume of data on primary storage that must be backed up by enabling deletion of data from the live system after it has been archived.

There are some challenges of data archiving.

Organizations have to comply with numerous ever-evolving governmental regulations for data storage that can be intimidating and complex.

The amount of data that is generated in most organizations is increasing exponentially. There is a need of the archiving solution to scale up to manage the massive and continuous growth of storage volumes.

Auditing

Auditing helps with addressing the growing need for regulating data use within organizations. It enables full visibility and accountability of data use for legal, financial, data-security, intellectual-property, and data-privacy purposes.

An audit log, also called an audit trail, is essentially a record of events and changes.

By viewing audit logs, you can track several actions:

- You can see by whom, how, when, and how often data is produced, viewed, and manipulated.
- You can track failed authentication attempts.
- You can see the user name, the date and time, the workstation, and the user log action description for invalid login attempts.
- You can track permission changes and compare access control list (ACL) values before and after the change was made.